IEC 60601-1

Edition 3.2 2020-08
CONSOLIDATED VERSION

INTERNATIONAL STANDARD

colour inside

Medical electrical equipment –
Part 1: General requirements for basic safety and essential performance

IEC 60601-1:2005-12+AMD1:2012-07+AMD2:2020-08 CSV(en)

Copyright International Electrotechnical Commission
Provided by IHS Markit under license with IEC
No reproduction or networking permitted without license from IHS

Not for Resale, 08/26/2020 19:12:41 MDT

THIS PUBLICATION IS COPYRIGHT PROTECTED
Copyright © 2020 IEC, Geneva, Switzerland

All rights reserved. Unless otherwise specified, no part of this publication may be reproduced or utilized in any form or by any means, electronic or mechanical, including photocopying and microfilm, without permission in writing from either IEC or IEC's member National Committee in the country of the requester. If you have any questions about IEC copyright or have an enquiry about obtaining additional rights to this publication, please contact the address below or your local IEC member National Committee for further information.

IEC Central Office
3, rue de Varembé
CH-1211 Geneva 20
Switzerland

Tel.: +41 22 919 02 11
info@iec.ch
www.iec.ch

About the IEC
The International Electrotechnical Commission (IEC) is the leading global organization that prepares and publishes International Standards for all electrical, electronic and related technologies.

About IEC publications
The technical content of IEC publications is kept under constant review by the IEC. Please make sure that you have the latest edition, a corrigendum or an amendment might have been published.

IEC publications search - webstore.iec.ch/advsearchform
The advanced search enables to find IEC publications by a variety of criteria (reference number, text, technical committee,…). It also gives information on projects, replaced and withdrawn publications.

IEC Just Published - webstore.iec.ch/justpublished
Stay up to date on all new IEC publications. Just Published details all new publications released. Available online and once a month by email.

IEC Customer Service Centre - webstore.iec.ch/csc
If you wish to give us your feedback on this publication or need further assistance, please contact the Customer Service Centre: sales@iec.ch.

Electropedia - www.electropedia.org
The world's leading online dictionary on electrotechnology, containing more than 22 000 terminological entries in English and French, with equivalent terms in 16 additional languages. Also known as the International Electrotechnical Vocabulary (IEV) online.

IEC Glossary - std.iec.ch/glossary
67 000 electrotechnical terminology entries in English and French extracted from the Terms and definitions clause of IEC publications issued between 2002 and 2015. Some entries have been collected from earlier publications of IEC TC 37, 77, 86 and CISPR.

--`,,```,,,,````-`-`,,`,,`,`,,`---

Copyright International Electrotechnical Commission
Provided by IHS Markit under license with IEC
No reproduction or networking permitted without license from IHS

Not for Resale, 08/26/2020 19:12:41 MDT

IEC 60601-1

Edition 3.2 2020-08
CONSOLIDATED VERSION

INTERNATIONAL STANDARD

colour inside

Medical electrical equipment –
Part 1: General requirements for basic safety and essential performance

INTERNATIONAL
ELECTROTECHNICAL
COMMISSION

ICS 11.040.01

ISBN 978-2-8322-8799-6

Warning! Make sure that you obtained this publication from an authorized distributor.

® Registered trademark of the International Electrotechnical Commission
Copyright International Electrotechnical Commission
Provided by IHS Markit under license with IEC
No reproduction or networking permitted without license from IHS
Not for Resale, 08/26/2020 19:12:41 MDT

Copyright International Electrotechnical Commission
Provided by IHS Markit under license with IEC
No reproduction or networking permitted without license from IHS
Not for Resale, 08/26/2020 19:12:41 MDT

IEC 60601-1

Edition 3.2 2020-08
CONSOLIDATED VERSION

REDLINE VERSION

colour inside

Medical electrical equipment –
Part 1: General requirements for basic safety and essential performance

IEC 60601-1:2005-12+AMD1:2012-07+AMD2:2020-08 CSV(en)

Copyright International Electrotechnical Commission
Provided by IHS Markit under license with IEC
No reproduction or networking permitted without license from IHS

Not for Resale, 08/26/2020 19:12:41 MDT

Publication IEC 60601-1 (Third edition – 2005) I-SH 01

MEDICAL ELECTRICAL EQUIPMENT – Part 1: General requirements for basic safety and essential performance

INTERPRETATION SHEET 1

This interpretation sheet has been prepared by SC 62A: Common aspects of electrical equipment used in medical practice

The text of this interpretation sheet is based on the following documents:

ISH	Report on voting
62A/599/ISH	62A/613/RVD

Full information on the voting for the approval of this interpretation sheet can be found in the report on voting indicated in the above table.

_____

Subclause 1.1

This subclause is clarified by the following:

IEC 60601-1 does not apply to medical gas pipeline systems covered by ISO 7396-1, *Medical gas pipeline systems — Part 1: Pipeline systems for compressed medical gases and vacuum.*

NOTE Subclause 6.3 of ISO 7396-1 applies the requirement of IEC 60601-1-8 to certain monitoring and alarm signals.

This clarification will remain valid until a new version of IEC 60601-1 is published.

_____

April 2008

Copyright International Electrotechnical Commission
Provided by IHS Markit under license with IEC
No reproduction or networking permitted without license from IHS
Not for Resale, 08/26/2020 19:12:41 MDT

Publication IEC 60601-1 (Third edition – 2005) I-SH 02

MEDICAL ELECTRICAL EQUIPMENT –

Part 1: General requirements for basic safety and essential performance

INTERPRETATION SHEET 2

This interpretation sheet has been prepared by subcomittee 62A: Common aspects of electrical equipment used in medical practice, of IEC technical committee 62: Electrical equipment in medical practice.

The text of this interpretation sheet is based on the following documents:

ISH	Report on voting
62A/634/ISH	62A/640/RVD

Full information on the voting for the approval of this interpretation sheet can be found in the report on voting indicated in the above table.

_____

Subclause 11.3

This subclause is clarified by the following:

As stated in the rationale for this subclause, fire ENCLOSURES are intended to be used only where there is a significant likelihood of fire due to the presence of a source of ignition (as described in the subclause) *and* a *significant* source of fuel. Most materials used in the construction of ME EQUIPMENT are not considered to be such a source of fuel unless they are in the presence of an OXYGEN RICH ENVIRONMENT. MANUFACTURERS should determine, through analyses documented in the RISK MANAGEMENT FILE, whether the ME EQUIPMENT contains combustible materials (fuel) in sufficient quantities to support combustion in conjunction with ignition sources (capable of releasing greater than 900 J).

Subclause 13.1.2

This subclause is clarified by the following:

As stated in subclause 4.7, it is the MANUFACTURER'S RISK ANALYSIS that determines which components are subject to failure testing based on the associated RISK. Where the associated RISK of fire exceeds the MANUFACTURER'S criteria for RISK acceptability, the MANUFACTURER'S simulation analysis (such as FMEAs) should be accepted in lieu of physical testing. As also stated in 4.7, component reliability and ratings are to be considered in such failure simulation analyses. Common electronic components that have a history of use without causing equipment fires should not be considered a likely source of ignition.

Where the subclause identifies "emission of flames, molten metal, poisonous or ignitable substance in hazardous quantities;" as a hazardous situation, this refers to emissions from *the ENCLOSURE* not from components themselves. Where it identifies "exceeding the allowable values for 'other components and materials' identified in Table 22 times 1,5 minus 12,5 °C", this applies only where doing so would result in an unacceptable RISK (as identified in the MANUFACTURER'S RISK ANALYSIS according to 4.7). Typically, this would be cases where

Copyright International Electrotechnical Commission
Provided by IHS Markit under license with IEC
No reproduction or networking permitted without license from IHS Not for Resale, 08/26/2020 19:12:41 MDT

ESSENTIAL PERFORMANCE would not be maintained or where greater than 900 J of energy would be released in the presence of flammable materials that could sustain combustion.

The first exemption to fault analysis or testing identified in subclause 13.1.2 ("The construction or the supply circuit limits the power dissipation in SINGLE FAULT CONDITION to less than 15 W or the energy dissipation to less than 900 J.") is intended to apply where the component design itself ("The construction") or fusing (or other current limiting devices) in the supply circuit ("or the supply circuit") assure the energy released during failures will not exceed the limits. For most common signal level components rated for operation below 5 Watts, the energy released by short-circuiting of outputs will not exceed the 900 J limit.

This clarification will remain valid until a new version of IEC 60601-1 is published.

_____

January 2009 **ICS 11.040**

Copyright International Electrotechnical Commission
Provided by IHS Markit under license with IEC
No reproduction or networking permitted without license from IHS Not for Resale, 08/26/2020 19:12:41 MDT

SC 62A/Publication IEC 60601-1:2005, including Amendment 1:2012, Third edition/I-SH 03

MEDICAL ELECTRICAL EQUIPMENT – Part 1: General requirements for basic safety and essential performance

INTERPRETATION SHEET 3

This interpretation sheet has been prepared by subcommittee 62A: Common aspects of electrical equipment used in medical practice, of IEC technical committee 62: Electrical equipment in medical practice.

The text of this interpretation sheet is based on the following documents:

ISH	Report on voting
62A/858/ISH	62A/875/RVD

Full information on the voting for the approval of this interpretation sheet can be found in the report on voting indicated in the above table.

Subclause 13.1.2 fourth dash (Emissions, deformation of ENCLOSURE or exceeding maximum temperature)

This subclause states the following:

The following HAZARDOUS SITUATIONS shall not occur:

– ....

– temperatures of ME EQUIPMENT parts that are not APPLIED PARTS but are likely to be touched, exceeding the allowable values in Table 23 when measured and adjusted as described in 11.1.3;

This is clarified by the following:

The above requirement is regarded as fulfilled in accordance with Subclause 4.5 for temperatures at the surfaces of the enclosure, if the following conditions are fulfilled:

– The maximum allowed temperature on OPERATOR accessible surfaces in SINGLE FAULT CONDITION is 105 °C; and

– the instructions for use contain a warning that, under some SINGLE FAULT CONDITIONS, the temperature of: (*indicate the surface of concern*) could get hot and there is a possible RISK of a burn if touched, and

– if the RISK ANALYSIS demonstrates a need for a warning symbol on the ENCLOSURE, safety sign ISO 7010-W018 ( ) shall be used on or adjacent to the hot spot on the ENCLOSURE; and

– the RISK ASSESSMENT demonstrates that the temperature attained in the SINGLE FAULT CONDITION is acceptable, and

– the RISK ASSESSMENT demonstrates that applying the alternative RISK CONTROL measures in this Interpretation Sheet results in a RESIDUAL RISK that is comparable to the RESIDUAL RISK resulting from applying the requirement of the standard.

NOTE 1 This Interpretation Sheet is intended to be used with both Edition 3.0 and Edition 3.1 of IEC 60601-1.

NOTE 2 An example of an analysis that demonstrates an adequately low probability of occurrence of HARM is shown below.

May 2013 **ICS 11.040**

Copyright International Electrotechnical Commission
Provided by IHS Markit under license with IEC
No reproduction or networking permitted without license from IHS Not for Resale, 08/26/2020 19:12:41 MDT

Example RISK ASSESSMENT:

The sum failure rate for parts that could increase the surface temperature of parts of the enclosure of XYZ device touchable only by the OPERATOR to values above those of Table 23 calculates to be 60 FIT (1 FIT = 1E-9/h) according to the standard MIL-HDBK-217F where FIT stands for "failure in time". In case of such failures, the device would emit an odour and would no longer function properly. It is estimated, that only in one of 3 cases the device would not be switched off immediately and the hot surface would be resulting in a burn.

The resulting overall probability of such HARM where adequate warning is provided in the instructions for use in combination with warning sign ISO 7010 W018 would be: probability = 1/3 * 60 FIT = 2 E-8/h =approx. 0,0002 per year.

In this example, the WXW Company's RISK acceptance criteria require that a HARM of that severity must have a probability of less than 0,0003 per year for the associated RISK to be considered acceptable. Based on that RISK acceptance criterion, the RISK associated with overtemperature of the ENCLOSURE caused by single faults in the circuitry is acceptable.

Copyright International Electrotechnical Commission
Provided by IHS Markit under license with IEC
No reproduction or networking permitted without license from IHS Not for Resale, 08/26/2020 19:12:41 MDT

CONTENTS

FOREWORD 11
INTRODUCTION 14
INTRODUCTION TO AMENDMENT 1 16
INTRODUCTION TO AMENDMENT 2 16
1 Scope, object and related standards 18
1.1 * Scope 18
1.2 Object 18
1.3 * Collateral standards 18
1.4 * Particular standards 19
2 * Normative references 19
3 * Terminology and definitions 24
4 General requirements 45
4.1 * Conditions for application to ME EQUIPMENT or ME SYSTEMS 45
4.2 * RISK MANAGEMENT PROCESS for ME EQUIPMENT or ME SYSTEMS 45
4.3 * ESSENTIAL PERFORMANCE 48
4.4 * EXPECTED SERVICE LIFE 49
4.5 ~~* Equivalent safety for ME EQUIPMENT or ME SYSTEMS~~
* Alternative RISK CONTROL measures or test methods for ME EQUIPMENT or ME SYSTEMS 50
4.6 * ME EQUIPMENT or ME SYSTEM parts that contact the PATIENT 50
4.7 * SINGLE FAULT CONDITION for ME EQUIPMENT 50
4.8 * Components of ME EQUIPMENT 51
4.9 * Use of COMPONENTS WITH HIGH-INTEGRITY CHARACTERISTICS in ME EQUIPMENT 52
4.10 * Power supply 53
4.11 Power input 53
5 * General requirements for testing ME EQUIPMENT 54
5.1 * TYPE TESTS 54
5.2 * Number of samples 54
5.3 Ambient temperature, humidity, atmospheric pressure 54
5.4 Other conditions 54
5.5 Supply voltages, type of current, nature of supply, frequency 55
5.6 Repairs and modifications 55
5.7 * Humidity preconditioning treatment 55
5.8 Sequence of tests 56
5.9 * Determination of APPLIED PARTS and ACCESSIBLE PARTS 56
6 * Classification of ME EQUIPMENT and ME SYSTEMS 59
6.1 General 59
6.2 * Protection against electric shock 59
6.3 Protection against harmful ingress of water or particulate matter 59
6.4 Method(s) of sterilization 59
6.5 Suitability for use in an OXYGEN RICH ENVIRONMENT 59
6.6 * Mode of operation 59
7 ME EQUIPMENT identification, marking and documents 60
7.1 General 60

Copyright International Electrotechnical Commission
Provided by IHS Markit under license with IEC
No reproduction or networking permitted without license from IHS
Not for Resale, 08/26/2020 19:12:41 MDT

7.2 Marking on the outside of ME EQUIPMENT or ME EQUIPMENT parts (see also Table C.1) 61
7.3 Marking on the inside of ME EQUIPMENT or ME EQUIPMENT parts (see also Table C.2) 66
7.4 Marking of controls and instruments (see also Table C.3) 67
7.5 ~~Safety signs~~ SAFETY SIGNS 69
7.6 Symbols 70
7.7 Colours of the insulation of conductors 70
7.8 * Indicator lights and controls 71
7.9 ACCOMPANYING DOCUMENTS 72
8 * Protection against electrical HAZARDS from ME EQUIPMENT 79
8.1 Fundamental rule of protection against electric shock 79
8.2 Requirements related to power sources 80
8.3 Classification of APPLIED PARTS 80
8.4 Limitation of voltage, current or energy 81
8.5 Separation of parts 84
8.6 * Protective earthing, functional earthing and potential equalization of ME EQUIPMENT 97
8.7 LEAKAGE CURRENTS and PATIENT AUXILIARY CURRENTS 100
8.8 Insulation 122
8.9 * CREEPAGE DISTANCES and AIR CLEARANCES 129
8.10 Components and wiring 147
8.11 MAINS PARTS, components and layout 149
9 * Protection against MECHANICAL HAZARDS of ME EQUIPMENT and ME SYSTEMS 155
9.1 MECHANICAL HAZARDS of ME EQUIPMENT 155
9.2 * MECHANICAL HAZARDS associated with moving parts 155
9.3 * MECHANICAL HAZARD associated with surfaces, corners and edges 161
9.4 * Instability HAZARDS 161
9.5 * Expelled parts HAZARD 166
9.6 Acoustic energy (including infra- and ultrasound) and vibration 167
9.7 * Pressure vessels and parts subject to pneumatic and hydraulic pressure 168
9.8 * MECHANICAL HAZARDS associated with support systems 171
10 * Protection against unwanted and excessive radiation HAZARDS 177
10.1 X-Radiation 177
10.2 Alpha, beta, gamma, neutron and other particle radiation 178
10.3 Microwave radiation 178
10.4 * Lasers ~~and light emitting diodes (LEDs)~~ 179
10.5 * Other visible electromagnetic radiation 179
10.6 * Infrared radiation 179
10.7 * Ultraviolet radiation 179
11 Protection against excessive temperatures and other HAZARDS 179
11.1 * Excessive temperatures in ME EQUIPMENT 179
11.2 * Fire prevention 184
11.3 * Constructional requirements for fire ENCLOSURES of ME EQUIPMENT 188
11.4 * ME EQUIPMENT and ME SYSTEMS intended for use with flammable anaesthetics 191
11.5 * ME EQUIPMENT and ME SYSTEMS intended for use in conjunction with flammable agents 191

Copyright International Electrotechnical Commission
Provided by IHS Markit under license with IEC
No reproduction or networking permitted without license from IHS
Not for Resale, 08/26/2020 19:12:41 MDT

11.6 Overflow, spillage, leakage, ingress of water or particulate matter, cleaning, disinfection, sterilization and compatibility with substances used with the ME EQUIPMENT 191
11.7 Biocompatibility of ME EQUIPMENT and ME SYSTEMS 194
11.8 * Interruption of the power supply / SUPPLY MAINS to ME EQUIPMENT 194
12 * Accuracy of controls and instruments and protection against hazardous outputs 194
12.1 Accuracy of controls and instruments 194
12.2 USABILITY of ME EQUIPMENT 194
12.3 ALARM SYSTEMS 194
12.4 Protection against hazardous output 194
13 * HAZARDOUS SITUATIONS and fault conditions for ME EQUIPMENT 196
13.1 Specific HAZARDOUS SITUATIONS 196
13.2 SINGLE FAULT CONDITIONS 198
14 * PROGRAMMABLE ELECTRICAL MEDICAL SYSTEMS (PEMS) 203
14.1 * General 203
14.2 * Documentation 204
14.3 * RISK MANAGEMENT plan 204
14.4 * PEMS DEVELOPMENT LIFE-CYCLE 204
14.5 * Problem resolution 204
14.6 RISK MANAGEMENT PROCESS 205
14.7 * Requirement specification 205
14.8 * Architecture 205
14.9 * Design and implementation 206
14.10 * VERIFICATION 206
14.11 * PEMS VALIDATION 206
14.12 * Modification 207
14.13 ~~* Connection of PEMS by NETWORK/DATA COUPLING to other equipment~~ * PEMS intended to be incorporated into an IT-NETWORK 207
15 Construction of ME EQUIPMENT 208
15.1 * Arrangements of controls and indicators of ME EQUIPMENT 208
15.2 * Serviceability 208
15.3 Mechanical strength 209
15.4 ME EQUIPMENT components and general assembly 212
15.5 * MAINS SUPPLY TRANSFORMERS of ME EQUIPMENT and transformers providing separation in accordance with 8.5 218
16 * ME SYSTEMS 222
16.1 * General requirements for the ME SYSTEMS 222
16.2 * ACCOMPANYING DOCUMENTS of an ME SYSTEM 223
16.3 * Power supply 224
16.4 ENCLOSURES 224
16.5 * SEPARATION DEVICES 224
16.6 * LEAKAGE CURRENTS 224
16.7 * Protection against MECHANICAL HAZARDS 225
16.8 Interruption of the power supply to parts of an ME SYSTEM 226
16.9 ME SYSTEM connections and wiring 226
17 * Electromagnetic compatibility of ME EQUIPMENT and ME SYSTEMS 228
Annex A (informative) General guidance and rationale 229
Annex B (informative) Sequence of testing 351

Copyright International Electrotechnical Commission
Provided by IHS Markit under license with IEC
No reproduction or networking permitted without license from IHS
Not for Resale, 08/26/2020 19:12:41 MDT

Annex C (informative) Guide to marking and labelling requirements for ME EQUIPMENT and ME SYSTEMS 355
Annex D (informative) Symbols on marking (see Clause 7) 358
Annex E (informative) Examples of the connection of the measuring device (MD) for measurement of the PATIENT LEAKAGE CURRENT and PATIENT AUXILIARY CURRENT (see 8.7) 367
Annex F (informative) Suitable measuring supply circuits 369
Annex G (normative) Protection against HAZARDS of ignition of flammable anaesthetic mixtures 372
Annex H (informative) PEMS structure, PEMS DEVELOPMENT LIFE-CYCLE and documentation 388
Annex I (informative) ME SYSTEMS aspects 401
Annex J (informative) Survey of insulation paths 407
Annex K (informative) Simplified PATIENT LEAKAGE CURRENT diagrams 410
Annex L (normative) Insulated winding wires for use without interleaved insulation 413
Annex M (normative) Reduction of pollution degrees 416
Bibliography 417
INDEX OF ABBREVIATIONS AND ACRONYMS 422
INDEX 424

Figure 1 – Detachable mains connection 25
Figure 2 – Example of the defined terminals and conductors 26
Figure 3 – Example of a CLASS I ME EQUIPMENT 27
Figure 4 – Example of a metal-enclosed CLASS II ME EQUIPMENT 27
Figure 5 – Schematic flow chart for component qualification (see 4.8) 52
Figure 6 – Standard test finger (see 5.9.2.1) 57
Figure 7 – Test hook (see 5.9.2.2) 58
Figure 8 – Test pin (see 8.4.2 d) 83
Figure 9 – Application of test voltage to bridged PATIENT CONNECTIONS for DEFIBRILLATION-PROOF APPLIED PARTS (see 8.5.5.1) 93
Figure 10 – Application of test voltage to individual PATIENT CONNECTIONS for DEFIBRILLATION-PROOF APPLIED PARTS (see 8.5.5.1) 95
Figure 11 – Application of test voltage to test the delivered defibrillation energy 97
Figure 12 – Example of a measuring device and its frequency characteristics 102
Figure 13 – Measuring circuit for ~~the~~ EARTH LEAKAGE CURRENT of CLASS I ME EQUIPMENT, with or without APPLIED PART 105
Figure 14 – Measuring circuit for ~~the~~ TOUCH CURRENT 107
Figure 15 – Measuring circuit for ~~the~~ PATIENT LEAKAGE CURRENT from the PATIENT CONNECTION to earth 109
Figure 16 – Measuring circuit for ~~the~~ PATIENT LEAKAGE CURRENT via the PATIENT CONNECTION(S) of an F-TYPE APPLIED PART to earth caused by an external voltage on the PATIENT CONNECTION(S) 111
Figure 17 – Measuring circuit for ~~the~~ PATIENT LEAKAGE CURRENT from PATIENT CONNECTION(S) to earth caused by an external voltage on a SIGNAL INPUT/OUTPUT PART 113
Figure 18 – Measuring circuit for ~~the~~ PATIENT LEAKAGE CURRENT from PATIENT CONNECTION(S) to earth caused by an external voltage on a metal ACCESSIBLE PART that is not PROTECTIVELY EARTHED 115

Copyright International Electrotechnical Commission
Provided by IHS Markit under license with IEC
No reproduction or networking permitted without license from IHS
Not for Resale, 08/26/2020 19:12:41 MDT

Figure 19 – Measuring circuit for ~~the~~ PATIENT AUXILIARY CURRENT 116

Figure 20 – Measuring circuit for ~~the~~ total PATIENT LEAKAGE CURRENT with all PATIENT CONNECTIONS of all APPLIED PARTS of the same type (TYPE B APPLIED PARTS, TYPE BF APPLIED PARTS or TYPE CF APPLIED PARTS) connected together 117

Figure 21 – Ball-pressure test apparatus 129

Figure 22 – CREEPAGE DISTANCE and AIR CLEARANCE – Example 1 142

Figure 23 – CREEPAGE DISTANCE and AIR CLEARANCE – Example 2 142

Figure 24 – CREEPAGE DISTANCE and AIR CLEARANCE – Example 3 142

Figure 25 – CREEPAGE DISTANCE and AIR CLEARANCE – Example 4 143

Figure 26 – CREEPAGE DISTANCE and AIR CLEARANCE – Example 5 143

Figure 27 – CREEPAGE DISTANCE and AIR CLEARANCE – Example 6 144

Figure 28 – CREEPAGE DISTANCE and AIR CLEARANCE – Example 7 144

Figure 29 – CREEPAGE DISTANCE and AIR CLEARANCE – Example 8 145

Figure 30 – CREEPAGE DISTANCE and AIR CLEARANCE – Example 9 146

Figure 31 – CREEPAGE DISTANCE and AIR CLEARANCE – Example 10 147

Figure 32 – Ratio between HYDRAULIC TEST PRESSURE and MAXIMUM ~~PERMISSIBLE WORKING~~ EQUIPMENT PRESSURE 170

Figure 33 – ~~Human body test mass **(see 9.8.3.3)**~~ Body upper-carriage module 176

Figure 34 – Spark ignition test apparatus 185

Figure 35 – Maximum allowable current *I* as a function of the maximum allowable voltage *U* measured in a purely resistive circuit in an OXYGEN RICH ENVIRONMENT 186

Figure 36 – Maximum allowable voltage *U* as a function of the capacitance *C* measured in a capacitive circuit used in an OXYGEN RICH ENVIRONMENT 186

Figure 37 – Maximum allowable current *I* as a function of the inductance *L* measured in an inductive circuit in an OXYGEN RICH ENVIRONMENT 187

Figure 38 – Baffle 190

Figure 39 – Area of the bottom of an ENCLOSURE as specified in 11.3 b) 1) 191

Figure 40 – Identification of MEANS OF PATIENT PROTECTION and MEANS OF OPERATOR PROTECTION 85

Figure 41 – WORKING VOLTAGE measurement 90

Figure A.1 – Identification of ME EQUIPMENT, APPLIED PARTS and PATIENT CONNECTIONS in an ECG monitor 235

Figure A.2 – Example of the insulation of an F-TYPE APPLIED PART with the insulation incorporated in the ME EQUIPMENT 235

Figure A.3 – Identification of ME EQUIPMENT, APPLIED PARTS and PATIENT CONNECTIONS in a PATIENT monitor with invasive pressure monitoring facility 236

Figure A.4 – Identification of ME EQUIPMENT, APPLIED PARTS and PATIENT CONNECTIONS in a multifunction PATIENT monitor with invasive pressure monitoring facilities 237

Figure A.5 – Identification of APPLIED PARTS and PATIENT CONNECTIONS in an X-ray ME SYSTEM 238

Figure A.6 – Identification of ME EQUIPMENT, APPLIED PARTS and PATIENT CONNECTIONS in a transcutaneous electronic nerve stimulator (TENS) intended to be worn on the PATIENT'S belt and connected to electrodes applied to the PATIENT'S upper arm 239

Figure A.7 – Identification of ME EQUIPMENT or ME SYSTEM, APPLIED PARTS and PATIENT CONNECTIONS in a personal computer with an ECG module 240

Figure A.8 – ~~Pictorial representation~~ Illustration of the relationship of HAZARD, sequence of events, HAZARDOUS SITUATION and HARM 244

Figure A.9 – Example of PATIENT ENVIRONMENT 250

--`,,`,,`-`-`,,`,,`,`,,`---

Copyright International Electrotechnical Commission
Provided by IHS Markit under license with IEC
No reproduction or networking permitted without license from IHS
Not for Resale, 08/26/2020 19:12:41 MDT

Figure A.10 – Floating circuit 271

Figure A.11 – Interruption of a power-carrying conductor between ME EQUIPMENT parts in separate ENCLOSURES 272

~~Figure A.12 – Identification of MEANS OF PATIENT PROTECTION and MEANS OF OPERATOR PROTECTION .....~~

Figure A.13 – Allowable protective earth impedance where the fault current is limited 289

Figure A.14 – Probability of ventricular fibrillation 295

Figure A.15 – Example of a measuring circuit for the PATIENT LEAKAGE CURRENT from a PATIENT CONNECTION to earth for ME EQUIPMENT with multiple PATIENT CONNECTIONS 300

Figure A.16 – Instability test conditions 313

Figure A.17 – Example of determining TENSILE SAFETY FACTOR using Table 21 319

Figure A.18 – Example of determining design and test loads 320

Figure A.19 – Example of human body mass distribution 320

Figure A.20 – Relationship of the terms used to describe equipment, ACCESSORIES or equipment parts 246

Figure A.21 – Example of ME EQUIPMENT having two different functions on one common APPLIED PART circuit 287

Figure A.22 – Maximum allowable temperature for surfaces and APPLIED PARTS at higher altitudes 325

Figure A.23 – Example of the needed MEANS OF OPERATOR PROTECTION between the terminals of an INTERNAL ELECTRICAL POWER SOURCE and a subsequent protective device 343

Figure A.24 – Example of Scenario 1 276

Figure A.25 – Example of Scenario 2 277

Figure A.26 – Procedure for determination of AIR CLEARANCE requirements IEC TR 62368-2:2019 [77], 5.4.2.1 (modified) 281

Figure E.1 – TYPE B APPLIED PART 367

Figure E.2 – TYPE BF APPLIED PART 367

Figure E.3 – TYPE CF APPLIED PART 368

Figure E.4 – PATIENT AUXILIARY CURRENT 368

Figure E.5 – Loading of the PATIENT CONNECTIONS if specified by the MANUFACTURER 368

Figure F.1 – Measuring supply circuit with one side of the SUPPLY MAINS at approximately earth potential 369

Figure F.2 – Measuring supply circuit with SUPPLY MAINS approximately symmetrical to earth potential 369

Figure F.3 – Measuring supply circuit for polyphase ME EQUIPMENT specified for connection to a polyphase SUPPLY MAINS 370

Figure F.4 – Measuring supply circuit for single-phase ME EQUIPMENT specified for connection to a polyphase SUPPLY MAINS 370

Figure F.5 – Measuring supply circuit for ME EQUIPMENT having a separate power supply unit or intended to receive its power from another equipment in an ME SYSTEM 371

Figure G.1– Maximum allowable current I_{ZR} as a function of the maximum allowable voltage U_{ZR} measured in a purely resistive circuit with the most flammable mixture of ether vapour with air 378

Figure G.2 – Maximum allowable voltage U_{ZC} as a function of the capacitance C_{max} measured in a capacitive circuit with the most flammable mixture of ether vapour with air 379

Copyright International Electrotechnical Commission
Provided by IHS Markit under license with IEC
No reproduction or networking permitted without license from IHS
Not for Resale, 08/26/2020 19:12:41 MDT

Figure G.3 – Maximum allowable current I_{ZL} as a function of the inductance L_{max} measured in an inductive circuit with the most flammable mixture of ether vapour with air 379

Figure G.4 – Maximum allowable current I_{ZR} as a function of the maximum allowable voltage U_{ZR} measured in a purely resistive circuit with the most flammable mixture of ether vapour with oxygen 383

Figure G.5 – Maximum allowable voltage U_{ZC} as a function of the capacitance C_{max} measured in a capacitive circuit with the most flammable mixture of ether vapour with oxygen 384

Figure G.6 – Maximum allowable current I_{ZL} as a function of the inductance L_{max} measured in an inductive circuit with the most flammable mixture of ether vapour with oxygen 385

Figure G.7 – Test apparatus 387

Figure H.1 – Examples of PEMS/ PESS structures 389

Figure H.2 – A PEMS DEVELOPMENT LIFE-CYCLE model 390

Figure H.3 – ~~PEMS documentation requirements from Clause 14 and ISO 14971:2000~~ Not used 394

Figure H.4 – Example of potential parameters required to be specified for ~~NETWORK/DATA COUPLING~~ an IT-NETWORK 400

Figure I.1 – Example of the construction of a MULTIPLE SOCKET-OUTLET (MSO) 405

Figure I.2 – Examples of application of MULTIPLE SOCKET-OUTLETS (MSO) 406

Figure J.1 – Insulation example 1 407

Figure J.2 – Insulation example 2 407

Figure J.3 – Insulation example 3 407

Figure J.4 – Insulation example 4 408

Figure J.5 – Insulation example 5 408

Figure J.6 – Insulation example 6 409

Figure J.7 – Insulation example 7 409

Figure K.1 – ME EQUIPMENT with an ENCLOSURE made of insulating material 410

Figure K.2 – ME EQUIPMENT with an F-TYPE APPLIED PART 410

Figure K.3 – ME EQUIPMENT with an APPLIED PART and a SIGNAL INPUT/OUTPUT PART 411

Figure K.4 – ME EQUIPMENT with a PATIENT CONNECTION of a TYPE B APPLIED PART that is not PROTECTIVELY EARTHED 411

Figure K.5 – ME EQUIPMENT with a PATIENT CONNECTION of a TYPE BF APPLIED PART that is not PROTECTIVELY EARTHED 412

Table 1 – Units outside the SI units system that may be used on ME EQUIPMENT 69

Table 2 – Colours ~~of indicator lights~~ and ~~their~~ meanings of indicator lights and alarm indicator lights for ME EQUIPMENT 72

Table 3 – * Allowable values of PATIENT LEAKAGE CURRENTS and PATIENT AUXILIARY CURRENTS under NORMAL CONDITION and SINGLE FAULT CONDITION 103

Table 4 – * Allowable values of PATIENT LEAKAGE CURRENTS under the special test conditions identified in 8.7.4.7 104

Table 5 – Legends of symbols for Figure 9 to Figure 11, Figure 13 to Figure 20, Figure A.15, Annexes E and F 118

Table 6 – Test voltages for solid insulation forming a MEANS OF PROTECTION 126

Table 7 – Test voltages for MEANS OF OPERATOR PROTECTION 127

Table 8 – Multiplication factors for AIR CLEARANCES for altitudes up to 5 000 m 130

Copyright International Electrotechnical Commission
Provided by IHS Markit under license with IEC
No reproduction or networking permitted without license from IHS
Not for Resale, 08/26/2020 19:12:41 MDT

Table 9 – Material group classification 131
Table 10 – MAINS TRANSIENT VOLTAGE 132
Table 11 – ~~Minimum CREEPAGE DISTANCES and AIR CLEARANCES between parts of opposite polarity of the MAINS PART~~ Not used 133
Table 12 – Minimum CREEPAGE DISTANCES and AIR CLEARANCES providing MEANS OF PATIENT PROTECTION 134
Table 13 – Minimum AIR CLEARANCES providing MEANS OF OPERATOR PROTECTION from the MAINS PART 135
Table 14 – Additional AIR CLEARANCES for insulation in MAINS PARTS with PEAK WORKING VOLTAGES exceeding the peak value of the NOMINAL MAINS VOLTAGE [a] 136
Table 15 – Minimum AIR CLEARANCES for MEANS OF OPERATOR PROTECTION in SECONDARY CIRCUITS 137
Table 16 – Minimum CREEPAGE DISTANCES providing MEANS OF OPERATOR PROTECTION [a] 138
Table 17 – NOMINAL cross-sectional area of conductors of a POWER SUPPLY CORD 151
Table 18 – Testing of cord anchorages 152
Table 19 – MECHANICAL HAZARDS covered by this clause 155
Table 20 – Acceptable gaps [a] 157
Table 21 – Determination of TENSILE SAFETY FACTOR 172
Table 22 – Allowable maximum temperatures of parts 180
Table 23 – Allowable maximum temperatures for ~~ME EQUIPMENT parts~~ ACCESSIBLE PARTS that are likely to be touched 180
Table 24 – Allowable maximum temperatures for skin contact with ME EQUIPMENT APPLIED PARTS 181
Table 25 – Acceptable perforation of the bottom of an ENCLOSURE 190
Table 26 – * Temperature limits of motor windings 200
Table 27 – Maximum motor winding steady-state temperature 202
Table 28 – Mechanical strength test applicability 209
Table 29 – Drop height 211
Table 30 – Test torques for rotating controls 216
Table 31 – Maximum allowable temperatures of transformer windings under overload and short-circuit conditions at 25 °C (± 5 °C) ambient temperature 219
Table 32 – Test current for transformers 220
Table 33 – Test conditions for overtravel end stop test 160
Table 34 – Allowable maximum temperatures for ACCESSIBLE PARTS that are likely to be touched, but not intended to be touched to operate the ME EQUIPMENT 197
Table A.1 – Values of AIR CLEARANCE and CREEPAGE DISTANCE derived from Table 7 of IEC 61010-1:2001 and Table 12 304
Table A.2 – CREEPAGE DISTANCES to avoid failure due to tracking from IEC 60664-1 305
Table A.3 – Instability test conditions 312
Table A.4 – Allowable time exposure for level of acceleration 315
Table A.5 – Guidance on surface temperatures for ME EQUIPMENT that creates low temperatures (cools) for therapeutic purposes or as part of its operation 324
Table A.6 – Typical scenarios for the use of equipment complying with IEC 62368-1:2018 in ME EQUIPMENT 276
Table C.1– Marking on the outside of ME EQUIPMENT, ME SYSTEMS or their parts 355
Table C.2 – Marking on the inside of ME EQUIPMENT, ME SYSTEMS or their parts 356

Copyright International Electrotechnical Commission
Provided by IHS Markit under license with IEC
No reproduction or networking permitted without license from IHS
Not for Resale, 08/26/2020 19:12:41 MDT

Table C.3 – Marking of controls and instruments 356
Table C.4 – ACCOMPANYING DOCUMENTS, general 356
Table C.5 – ACCOMPANYING DOCUMENTS, instructions for use 357
Table D.1 – General symbols 359
Table D.2 – ~~Safety signs~~ SAFETY SIGNS 364
Table D.3 – General codes 366
Table G.1 – Gas-tightness of cord inlets 381
Table H.1 – ~~NETWORK/DATA COUPLING classification~~ Not used 398
Table I.1 – Some examples of ME SYSTEMS for illustration 403
Table L.1– Mandrel diameter 414
Table L.2 – Oven temperature 414
Table M.1 – Reduction of the pollution degree of internal environment through the use of additional protection 416

--`,,`,,`-`-`,,`,,`,`,,`---

Copyright International Electrotechnical Commission
Provided by IHS Markit under license with IEC
No reproduction or networking permitted without license from IHS
Not for Resale, 08/26/2020 19:12:41 MDT

INTERNATIONAL ELECTROTECHNICAL COMMISSION

_____

MEDICAL ELECTRICAL EQUIPMENT –

Part 1: General requirements for basic safety and essential performance

FOREWORD

1) The International Electrotechnical Commission (IEC) is a worldwide organization for standardization comprising all national electrotechnical committees (IEC National Committees). The object of IEC is to promote international co-operation on all questions concerning standardization in the electrical and electronic fields. To this end and in addition to other activities, IEC publishes International Standards, Technical Specifications, Technical Reports, Publicly Available Specifications (PAS) and Guides (hereafter referred to as "IEC Publication(s)"). Their preparation is entrusted to technical committees; any IEC National Committee interested in the subject dealt with may participate in this preparatory work. International, governmental and non-governmental organizations liaising with the IEC also participate in this preparation. IEC collaborates closely with the International Organization for Standardization (ISO) in accordance with conditions determined by agreement between the two organizations.
2) The formal decisions or agreements of IEC on technical matters express, as nearly as possible, an international consensus of opinion on the relevant subjects since each technical committee has representation from all interested IEC National Committees.
3) IEC Publications have the form of recommendations for international use and are accepted by IEC National Committees in that sense. While all reasonable efforts are made to ensure that the technical content of IEC Publications is accurate, IEC cannot be held responsible for the way in which they are used or for any misinterpretation by any end user.
4) In order to promote international uniformity, IEC National Committees undertake to apply IEC Publications transparently to the maximum extent possible in their national and regional publications. Any divergence between any IEC Publication and the corresponding national or regional publication shall be clearly indicated in the latter.
5) IEC provides no marking procedure to indicate its approval and cannot be rendered responsible for any equipment declared to be in conformity with an IEC Publication.
6) All users should ensure that they have the latest edition of this publication.
7) No liability shall attach to IEC or its directors, employees, servants or agents including individual experts and members of its technical committees and IEC National Committees for any personal injury, property damage or other damage of any nature whatsoever, whether direct or indirect, or for costs (including legal fees) and expenses arising out of the publication, use of, or reliance upon, this IEC Publication or any other IEC Publications.
8) Attention is drawn to the Normative references cited in this publication. Use of the referenced publications is indispensable for the correct application of this publication.
9) Attention is drawn to the possibility that some of the elements of this IEC Publication may be the subject of patent rights. IEC shall not be held responsible for identifying any or all such patent rights.

This consolidated version of the official IEC Standard and its amendments has been prepared for user convenience.

IEC 60601-1 edition 3.2 contains the third edition (2005-12) [documents 62A/505A/FDIS and 62A/512/RVD], its amendment 1 (2012-07) [documents 62A/805/FDIS and 62A/820/RVD] and its amendment 2 (2020-08) [documents 62A/1389/FDIS and 62A/1404/RVD].

This Consolidated version includes the contents of the corrigenda 1 (2006-12) and 2 (2007-12), the contents of the corrigendum to Amendment 1 (2014-07), as well as the interpretation sheets 1 (2008-04), 2 (2009-01) and 3 (2013-05).

In this Redline version, a vertical line in the margin shows where the technical content is modified by amendments 1 and 2. Additions are in green text, deletions are in strikethrough red text. A separate Final version with all changes accepted is available in this publication.

Copyright International Electrotechnical Commission
Provided by IHS Markit under license with IEC
No reproduction or networking permitted without license from IHS Not for Resale, 08/26/2020 19:12:41 MDT

International Standard IEC 60601-1 has been prepared by subcommittee 62A: Common aspects of electrical equipment used in medical practice, of IEC technical committee 62: Electrical equipment in medical practice.

This third edition cancels and replaces the second edition published in 1988, its Amendment 1 (1991) and Amendment 2 (1995), the second edition of IEC 60601-1-1 published in 2000 and the first edition of IEC 60601-1-4 published in 1996 and its Amendment 1 (1999). This edition constitutes a technical revision. This edition has been significantly restructured. Requirements in the electrical section have been further aligned with those for information technology equipment covered by IEC 60950-1 and a requirement for including a RISK MANAGEMENT PROCESS has been added. For an expanded description of this revision, see Annex A.3.

This publication has been drafted in accordance with the ISO/IEC Directives, Part 2.

In this standard the following print types are used:

- Requirements and definitions: in roman type.
- *Test specifications: in italic type.*
- Informative material appearing outside of tables, such as notes, examples and references: in smaller type. Normative text of tables is also in a smaller type.
- TERMS USED THROUGHOUT THIS STANDARD THAT HAVE BEEN DEFINED IN CLAUSE 3 AND ALSO GIVEN IN THE INDEX: IN SMALL CAPITALS.

In referring to the structure of this standard, the term

– “clause” means one of the seventeen numbered divisions within the table of contents, inclusive of all subdivisions (e.g. Clause 7 includes subclauses 7.1, 7.2, etc.);

– “subclause” means a numbered subdivision of a clause (e.g. 7.1, 7.2 and 7.2.1 are all subclauses of Clause 7).

References to clauses within this standard are preceded by the term “Clause” followed by the clause number. References to subclauses within this standard are by number only.

In this standard, the conjunctive “or” is used as an “inclusive or” so a statement is true if any combination of the conditions is true.

The verbal forms used in this standard conform to usage described in Annex G of the ISO/IEC Directives, Part 2. For the purposes of this standard, the auxiliary verb:

- “shall” means that compliance with a requirement or a test is mandatory for compliance with this standard;
- “should” means that compliance with a requirement or a test is recommended but is not mandatory for compliance with this standard;
- “may” is used to describe a permissible way to achieve compliance with a requirement or test.

An asterisk (*) as the first character of a title or at the beginning of a paragraph or table title indicates that there is guidance or rationale related to that item in Annex A.

The committee has decided that the contents of the base publication and its amendments will remain unchanged until the stability date indicated on the IEC web site under "http://webstore.iec.ch" in the data related to the specific publication. At this date, the publication will be

- reconfirmed,
- withdrawn,
- replaced by a revised edition, or
- amended.

Copyright International Electrotechnical Commission
Provided by IHS Markit under license with IEC
No reproduction or networking permitted without license from IHS Not for Resale, 08/26/2020 19:12:41 MDT

NOTE The attention of National Committees is drawn to the fact that equipment manufacturers and testing organizations may need a transitional period following publication of a new, amended or revised IEC or ISO publication in which to make products in accordance with the new requirements and to equip themselves for conducting new or revised tests. It is the recommendation of the committee that the content of this publication be adopted for mandatory implementation nationally not earlier than 3 years from the date of publication.

IMPORTANT – The "colour inside" logo on the cover page of this publication indicates that it contains colours which are considered to be useful for the correct understanding of its contents. Users should therefore print this publication using a colour printer.

--`,,```,,,,````-`-`,,`,,`,`,,`---

Copyright International Electrotechnical Commission
Provided by IHS Markit under license with IEC
No reproduction or networking permitted without license from IHS Not for Resale, 08/26/2020 19:12:41 MDT

INTRODUCTION

In 1976, IEC subcommittee 62A published the first edition of IEC/TR 60513, *Basic aspects of the safety philosophy for electrical equipment used in medical practice*. The first edition of IEC/TR 60513 provided the basis for developing:

– the first edition of IEC 60601-1 (the parent safety standard for MEDICAL ELECTRICAL EQUIPMENT);

– the IEC 60601-1-xx series of collateral standards for MEDICAL ELECTRICAL EQUIPMENT;

– the IEC 60601-2-xx series of particular standards for particular types of MEDICAL ELECTRICAL EQUIPMENT; and

– the IEC 60601-3-xx series of performance standards for particular types of MEDICAL ELECTRICAL EQUIPMENT.

Aware of the need and the urgency for a standard covering electrical equipment used in medical practice, the majority of National Committees voted in 1977 in favour of the first edition of IEC 60601-1, based on a draft that at the time represented a first approach to the problem. The extent of the scope, the complexity of the equipment concerned, and the specific nature of some of the protective measures and the corresponding tests for verifying them, required years of effort in order to prepare this first standard, which can now be said to have served as a universal reference since its publication.

However, the frequent application of the first edition revealed room for improvement. These improvements were all the more desirable in view of the considerable success that this standard has enjoyed since its publication.

The careful work of revision subsequently undertaken and continued over a number of years resulted in the publication of the second edition in 1988. This edition incorporated all the improvements that could be reasonably expected up to that time. Further developments remained under constant study. The second edition was amended in 1991 and then again in 1995.

The original IEC approach was to prepare separate BASIC SAFETY and performance standards for MEDICAL ELECTRICAL EQUIPMENT. This was a natural extension of the historical approach taken at the national and international level with other electrical equipment standards (e.g. those for domestic equipment), where BASIC SAFETY is regulated through mandatory standards but other performance specifications are regulated by market pressure. In this context, it has been said that, “The ability of an electric kettle to boil water is not critical to its safe use!”

It is now recognized that this is not the situation with many items of MEDICAL ELECTRICAL EQUIPMENT, and RESPONSIBLE ORGANIZATIONS have to depend on standards to ensure ESSENTIAL PERFORMANCE as well as BASIC SAFETY. Such areas include the accuracy with which the equipment controls the delivery of energy or therapeutic substances to the PATIENT, or processes and displays physiological data that will affect PATIENT management.

This recognition means that separating BASIC SAFETY and performance is somewhat inappropriate in addressing the HAZARDS that result from inadequate design of MEDICAL ELECTRICAL EQUIPMENT. Many particular standards in the IEC 60601-2-xx series address a range of ESSENTIAL PERFORMANCE requirements that cannot be directly evaluated by the RESPONSIBLE ORGANIZATION without applying such standards. (However, the current IEC 60601 series includes fewer requirements for ESSENTIAL PERFORMANCE than for BASIC SAFETY).

Copyright International Electrotechnical Commission
Provided by IHS Markit under license with IEC
No reproduction or networking permitted without license from IHS
Not for Resale, 08/26/2020 19:12:41 MDT

In anticipation of a third edition of IEC 60601-1, IEC subcommittee 62A prepared a second edition of IEC/TR 60513 [12][1)] in 1994. It was intended that the second edition of IEC/TR 60513 would provide guidance for developing this edition of IEC 60601-1, and for the further development of the IEC 60601-1-xx and IEC 60601-2-xx series.

In order to achieve consistency in international standards, address present expectations in the health care community and align with developments in IEC 60601-2-xx, the second edition of IEC/TR 60513 includes two major new principles:

– the first change is that the concept of "SAFETY" has been broadened from the BASIC SAFETY considerations in the first and second editions of IEC 60601-1 to include ESSENTIAL PERFORMANCE matters, (e.g. the accuracy of physiological monitoring equipment). Application of this principle leads to the change of the title of this publication from "Medical electrical equipment, Part 1: General requirements for safety" in the second edition, to "Medical electrical equipment, Part 1: General requirements for basic safety and essential performance";

– the second change is that, in specifying minimum safety requirements, provision is made for assessing the adequacy of the design PROCESS when this is the only practical method of assessing the safety of certain technologies such as programmable electronic systems. Application of this principle is one of the factors leading to introduction of a general requirement to carry out a RISK MANAGEMENT PROCESS. In parallel with the development of the third edition of IEC 60601-1, a joint project with ISO/TC 210 resulted in the publication of a general standard for RISK MANAGEMENT of medical devices. Compliance with this edition of IEC 60601-1 requires that the MANUFACTURER have in place a RISK MANAGEMENT PROCESS complying with parts of ISO 14971 (see 4.2).

This standard contains requirements concerning BASIC SAFETY and ESSENTIAL PERFORMANCE that are generally applicable to MEDICAL ELECTRICAL EQUIPMENT. For certain types of MEDICAL ELECTRICAL EQUIPMENT, these requirements are either supplemented or modified by the special requirements of a collateral or particular standard. Where particular standards exist, this standard should not be used alone.

Amendment 1 to this standard is intended to address:

– issues identified by National Committees and other interested parties since the publication of IEC 60601-1:2005;

– the way in which RISK MANAGEMENT has been introduced into IEC 60601-1:2005; and

– the way the concept of ESSENTIAL PERFORMANCE is used in IEC 60601-1:2005.

Throughout this document, there are many references to, and requirements incorporated from IEC 60950-1. Some of these requirements are derived from IEC 60950-1. For example, the requirements for spaces filled by insulating compound in 8.9.3. In other cases, the requirements are incorporated by a normative reference to IEC 60950-1:2005. For example, the requirements for solid insulation forming a MEANS OF OPERATOR PROTECTION in 8.5.1.3. The requirements incorporated by reference are primarily found in Clause 8 of this document, including many of the tables used to determine the requirements for MEANS OF PROTECTION, primarily MEANS OF OPERATOR PROTECTION and INSULATION CO-ORDINATION. The requirements incorporated by reference are addressed in Amendment 2. The derived requirements will be addressed during the development of the fourth edition of this document.

1) Figures in square brackets refer to the Bibliography.

Copyright International Electrotechnical Commission
Provided by IHS Markit under license with IEC
No reproduction or networking permitted without license from IHS Not for Resale, 08/26/2020 19:12:41 MDT

INTRODUCTION TO AMENDMENT 1

The third edition of IEC 60601-1 was published in 2005. At the time of publication, there were 94 National Committee comments on the 2nd CDV and the FDIS that were deferred to a future amendment/revision. Each of their deferred comments was captured in an Issue Sheet by the SC 62A secretariat. By the time of the Auckland meeting in April 2008, the Subcommittees had developed two Interpretation Sheets and the SC 62A secretariat has received an additional 15 issues from National Committees and other interested parties.

At the Auckland meeting, IEC/TC 62 approved a project to develop the 1st amendment to IEC 60601-1:2005 based on the issues outstanding at the time. The TC approved developing the 1st amendment with a view to addressing outstanding issues, including but not limited to:

– those listed in 62A/593/DC and 62A/602/INF;
– the way in which risk management has been introduced into IEC 60601-1:2005; and
– the way the concept of essential performance is used in IEC 60601-1:2005.

Since the Auckland meeting, the secretariat has received 73 additional issues from National Committees or other interested parties for a total of 182 Issues Sheets. This amendment is intended to address those issues.

INTRODUCTION TO AMENDMENT 2

The third edition of IEC 60601-1 was published in 2005 and amended in 2012. Since the publication of IEC 60601-1:2005/AMD1:2012, the IEC Subcommittee (SC) 62A Secretariat has been collecting issues from a variety of sources including comments from National Committees and questions submitted to IEC/SC 62A/Working Group (WG) 14. At the November 2015 meeting of IEC/SC 62A in Kobe, Japan, the subcommittee initiated a process to identify high-priority issues that need to be considered in Amendment 2 and should not wait until the fourth edition of IEC 60601-1, which is presently targeted for publication sometime after 2024.

Those issues selected for inclusion on the final "short list" to be addressed in Amendment 2 were those approved by a 2/3 majority of the National Committees present and voting at the Frankfurt meeting of SC 62A. At the meeting held on 10 October 2016, 109 items were presented to the National Committees present. A total of 78 items received the required 2/3 majority of the National Committees present and voting and were included in the "short list" for consideration in preparing Amendment 2. All remaining issues have been placed on a "long list" for consideration in the fourth edition of IEC 60601-1.

The "short list" of issues was documented in the design specification for Amendment 2. The responsible expert groups were directed to consider each issue assigned to it in Clause 6 of the design specification and develop an appropriate solution for the identified problem. That final solution in this amendment can encompass any technical solution proposed by the author of the issue or it can involve a different solution developed by the expert group. The expert group can also have recommended that no change to the standard was justified by the problem statement.

Because this is an amendment to the 2005 edition of IEC 60601-1, the style in force at the time of publication of IEC 60601-1 has been applied to this amendment. The style specified in ISO/IEC Directives, Part 2:2018 has only been applied when implementing the new style guidance would not result in additional editorial changes. For example, notes to definitions are designated as "NOTE" rather than "Note to entry" in Clause 3.

Users of this document should note that when constructing the dated references to specific elements in a standard, such as definitions, amendments are only referenced if they modified

Copyright International Electrotechnical Commission
Provided by IHS Markit under license with IEC
No reproduction or networking permitted without license from IHS Not for Resale, 08/26/2020 19:12:41 MDT

the text being cited. For example, if a reference is made to a definition that has not been modified by an amendment, then the reference to the amendment is not included in the dated reference.

Copyright International Electrotechnical Commission
Provided by IHS Markit under license with IEC
No reproduction or networking permitted without license from IHS
Not for Resale, 08/26/2020 19:12:41 MDT

MEDICAL ELECTRICAL EQUIPMENT –

Part 1: General requirements for basic safety and essential performance

1 Scope, object and related standards

1.1 * Scope

This International Standard applies to the BASIC SAFETY and ESSENTIAL PERFORMANCE of MEDICAL ELECTRICAL EQUIPMENT and MEDICAL ELECTRICAL SYSTEMS, hereafter referred to as ME EQUIPMENT and ME SYSTEMS.

If a clause or subclause is specifically intended to be applicable to ME EQUIPMENT only, or to ME SYSTEMS only, the title and content of that clause or subclause will say so. If that is not the case, the clause or subclause applies both to ME EQUIPMENT and to ME SYSTEMS, as relevant.

HAZARDS inherent in the intended physiological function of ME EQUIPMENT or ME SYSTEMS within the scope of this standard are not covered by specific requirements in this standard except in 7.2.13 and 8.4.1.

NOTE 1 See also 4.2.

~~This standard can also be applied to equipment used for compensation or alleviation of disease, injury or disability.~~

~~In vitro diagnostic equipment that does not fall within the definition of ME EQUIPMENT is covered by the IEC 61010 series [2]. This standard does not apply to the implantable parts of active implantable medical devices covered by ISO 14708-1 [3].~~

The IEC 60601 series does not apply to:

– in vitro diagnostic equipment that does not fall within the definition of ME EQUIPMENT, which is covered by the IEC 61010 series [61];
– implantable parts of active implantable medical devices covered by the ISO 14708 series [69]; or
– medical gas pipeline systems covered by ISO 7396-1 [68].

NOTE 2 ISO 7396-1 applies the requirement of IEC 60601-1-8 to certain monitoring and ALARM SIGNALS.

1.2 Object

The object of this standard is to specify general requirements and to serve as the basis for particular standards.

1.3 * Collateral standards

In the IEC 60601 series, collateral standards specify general requirements for BASIC SAFETY and ESSENTIAL PERFORMANCE applicable to:

– a subgroup of ME EQUIPMENT (e.g. radiological equipment);
– a specific characteristic of all ME EQUIPMENT not fully addressed in this standard.

Applicable collateral standards ~~become normative at the date of their publication and~~ shall apply together with this standard.

_____

~~2) IEC 61010 (all parts), *Safety requirements for electrical equipment for measurement, control, and laboratory use*~~

~~3) ISO 14708-1, *Implants for surgery – Active implantable medical devices – Part 1: General requirements for safety, marking and for information to be provided by the manufacturer*~~

Copyright International Electrotechnical Commission
Provided by IHS Markit under license with IEC
No reproduction or networking permitted without license from IHS Not for Resale, 08/26/2020 19:12:41 MDT

NOTE 1 When evaluating compliance with IEC 60601-1, it is permissible to independently assess compliance with the collateral standards.

NOTE 2 When declaring compliance with IEC 60601-1, the declarer should specifically list the collateral standards that have been applied. This allows the reader of the declaration to understand which collateral standards were part of the evaluation.

NOTE 3 Collateral standards in the IEC 60601 family are numbered IEC 60601-1-xx. ~~Members of~~ The IEC maintains a ~~register~~ catalogue of valid International Standards. Users of this standard should consult this ~~register~~ catalogue at "http://webstore.iec.ch" to determine which collateral standards have been published.

~~If a collateral standard applies to ME EQUIPMENT for which a particular standard exists, then the particular standard takes priority over the collateral standard.~~

1.4 * Particular standards

In the IEC 60601 series, particular standards specify BASIC SAFETY and ESSENTIAL PERFORMANCE requirements for the particular ME EQUIPMENT and ME SYSTEMS. Particular standards may modify, replace or delete requirements contained in this standard and applicable collateral standards as appropriate for the particular ME EQUIPMENT and ME SYSTEMS under consideration~~, and may add other BASIC SAFETY and ESSENTIAL PERFORMANCE requirements~~.

NOTE ~~Members of IEC and ISO maintain registers of valid International Standards. Users of this standard should consult these registers to determine which particular standards have been published.~~ Particular standards in the IEC 60601 family that are developed by IEC committees are numbered IEC 60601-2-xx. In addition, particular standards developed by joint projects between ISO and IEC can be numbered either IEC 80601-2-xx or ISO 80601-2-xx depending on which committee administered the project. IEC and ISO maintain catalogues of valid International Standards. Users of this standard should consult these catalogues at "http://webstore.iec.ch" and "http://www.iso.org/iso/store.htm" to determine which particular standards have been published.

A requirement of a particular standard takes priority over this standard and applicable collateral standards.

2 * Normative references

The following referenced documents are indispensable for the application of this document. For dated references, only the edition cited applies. For undated references, the latest edition of the referenced document (including any amendments) applies.

ATTENTION: Additional collateral standards of the IEC 60601 series, which are issued subsequent to publication of this standard, ~~become normative at the date of their publication and~~ shall apply together with this standard when applicable. They shall be considered as being included among the normative references below. See 1.3.

NOTE Informative references are listed in the Bibliography on page 396.

IEC 60065:2001, *Audio, video and similar electronic apparatus – Safety requirements* [4)]
Amendment 1:2005
Amendment 2:2010

IEC 60068-2-2:~~1974~~2007, *Environmental testing – Part 2-2: Tests – Test B: Dry heat*
~~Amendment 1 (1993)~~
~~Amendment 2 (1994)~~

IEC 60079-0, *Electrical apparatus for explosive gas atmospheres – Part 0: General requirements*

IEC 60079-2, *Electrical apparatus for explosive gas atmospheres – Part 2: Pressurized enclosures "p"*

4) There exists a consolidated edition 7.2 including IEC 60065:2001 and its Amendment 1 (2005) and Amendment 2 (2010).

Copyright International Electrotechnical Commission
Provided by IHS Markit under license with IEC
No reproduction or networking permitted without license from IHS Not for Resale, 08/26/2020 19:12:41 MDT

IEC 60079-5, *Electrical apparatus for explosive gas atmospheres – Part 5: Powder filling "q"*

IEC 60079-6, *Electrical apparatus for explosive gas atmospheres – Part 6: Oil-immersion "o"*

IEC 60083, *Plugs and socket-outlets for domestic and similar general use standardized in member countries of IEC*

IEC 60085, *Electrical insulation – Thermal classification*

IEC 60086-4, *Primary batteries – Part 4: Safety of lithium batteries*

IEC 60112, *Method for the determination of the proof and the comparative tracking indices of solid insulating materials*

IEC 60127-1, *Miniature fuses – Part 1: Definitions for miniature fuses and general requirements for miniature fuse-links*

IEC 60227-1:~~1993~~2007, *Polyvinyl chloride insulated cables of rated voltages up to and including 450/750 V – Part 1: General requirements* ~~5)~~
~~Amendment 1 (1995)~~
~~Amendment 2 (1998)~~

IEC 60245-1:2003, *Rubber insulated cables – Rated voltages up to and including 450/750 V – Part 1: General requirements*[6]
Amendment 1:2007

IEC 60252-1, *AC motor capacitors – Part 1: General – Performance, testing and rating – Safety requirements – Guide for installation and operation*

IEC 60320-1, *Appliance couplers for household and similar general purposes – Part 1: General requirements*

IEC 60335-1:~~2001~~2010, *Household and similar electrical appliances – Safety – Part 1: General requirements*

IEC 60364-4-41, *Electrical installations of buildings – Part 4-41: Protection for safety – Protection against electric shock*

IEC 60384-14:2005, *Fixed capacitors for use in electronic equipment – Part 14: Sectional specification: Fixed capacitors for electromagnetic interference suppression and connection to the supply mains*

~~IEC 60417-DB:2002, *Graphical symbols for use on equipment* 7)~~

IEC 60417, *Graphical symbols for use on equipment.* Available from: <http://www.graphical-symbols.info/equipment>

IEC 60445, *Basic and safety principles for man-machine interface, marking and identification – Identification of equipment terminals and of terminations of certain designated conductors, including general rules for an alphanumeric system*

IEC 60447, *Basic and safety principles for man-machine interface, marking and identification – Actuating principles*

~~5) There exists a consolidated edition 2.2 including IEC 60227-1:1993 and its Amendment 1 (1995) and Amendment 2 (1998).~~

6) There exists a consolidated edition 4.1 including IEC 60245-1:2003 and its Amendment 1 (2007).

~~7) "DB" refers to the joint ISO-IEC on-line database.~~

Copyright International Electrotechnical Commission
Provided by IHS Markit under license with IEC
No reproduction or networking permitted without license from IHS
Not for Resale, 08/26/2020 19:12:41 MDT

IEC 60529:1989, *Degrees of protection provided by enclosures (IP Code)* [8]
Amendment 1 (1999)

IEC 60601-1-2:2014, *Medical electrical equipment – Part 1-2: General requirements for basic safety and essential performance – Collateral standard: Electromagnetic ~~compatibility~~ disturbances – Requirements and tests*
Amendment 1:2020

IEC 60601-1-3:2008, *Medical electrical equipment – Part 1-3: General requirements for basic safety and essential performance. Collateral standard: ~~General requirements for~~ Radiation protection in diagnostic X-ray equipment*
Amendment 1:2013

IEC 60601-1-6:2010, *Medical electrical equipment – Part 1-6: General requirements for ~~safety~~ basic and essential performance – Collateral standard: Usability*
Amendment 1:2013
Amendment 2:2020

IEC 60601-1-8:2006, *Medical electrical equipment – Part 1-8: General requirements for basic safety and essential performance – Collateral standard: General requirements, tests and guidance for alarm systems in medical electrical equipment and medical electrical systems*
Amendment 1:2012
Amendment 2:2020

IEC 60664-1:~~1992~~2007, *Insulation coordination for equipment within low-voltage systems – Part 1: Principles, requirements and tests* ~~9)~~
~~Amendment 1 (2000)~~
~~Amendment 2 (2002)~~

IEC 60695-11-10, *Fire hazard testing – Part 11-10: Test flames – 50 W horizontal and vertical flame test methods*

IEC 60730-1:~~1999~~2010, *Automatic electrical controls for household and similar use – Part 1: General requirements* ~~10)~~
~~Amendment 1 (2003)~~

IEC 60747-5-5:2007, *Semiconductor devices – Discrete devices – Part 5-5: Optoelectronic devices – Photocouplers*

IEC 60825-1:~~1993~~2014, *Safety of laser products – Part 1: Equipment classification and requirements ~~and user's guide~~* ~~11)~~
~~Amendment 1 (1997)~~
~~Amendment 2 (2001)~~

IEC 60851-3:~~1996~~2009, *Winding wires – Test methods – Part 3: Mechanical properties* ~~12)~~
~~Amendment 1 (1997)~~
~~Amendment 2 (2003)~~

---

8) There exists a consolidated version 2.1, including IEC 60529:1989 and its Amendment 1 (1999).

~~9) There exists a consolidated edition 1.2 including IEC 60664-1:1992 and its Amendment 1 (2000) and Amendment 2 (2002).~~

~~10) There exists a consolidated edition 3.1, including IEC 60730-1:1999 and its Amendment 1 (2003)~~

~~11) There exists a consolidated edition 1.2, including IEC 60825-1:1993 and its Amendment 1 (1997) and Amendment 2 (2001).~~

~~12) There exists a consolidated edition 2.1, including IEC 60851-3:1996 and its Amendment 1 (1997).~~

Copyright International Electrotechnical Commission
Provided by IHS Markit under license with IEC
No reproduction or networking permitted without license from IHS
Not for Resale, 08/26/2020 19:12:41 MDT

IEC 60851-5:~~1996~~2008, *Winding wires – Test methods – Part 5: Electrical properties* ~~13)~~
~~Amendment 1 (1997)~~
~~Amendment 2 (2004)~~

IEC 60851-6:1996, *Winding wires – Test methods – Part 6: Thermal properties*
Amendment 1 (1997)

~~IEC 60878:2003, *Graphical symbols for electrical equipment in medical practice*~~

IEC 60884-1, *Plugs and socket-outlets for household and similar purposes - Part 1: General requirements*

IEC 60950-1:~~2001~~2005, *Information technology equipment – Safety – Part 1: General requirements*
Amendment 1:2009
Amendment 2:2013

IEC 61058-1:2000, *Switches for appliances – Part 1: General requirements* 14)
Amendment 1:2001
Amendment 2:2007

~~IEC 61558-1:1997, *Safety of power transformers, power supply units and similar – Part 1: General requirements and tests* 15)~~
~~Amendment 1 (1998)~~

IEC 61558-2-1, *Safety transformers, power supply units and similar – Part 2: Particular requirements for separating transformers for general use*

IEC 61672-1, *Electroacoustics – Sound level meters – Part 1: Specifications*

IEC 61672-2, *Electroacoustics – Sound level meters – Part 2: Pattern evaluation tests*

IEC 61965, *Mechanical safety of cathode ray tubes*

IEC 62133, *Secondary cells and batteries containing alkaline or other non-acid electrolytes – Safety requirements for portable sealed secondary cells, and for batteries made from them, for use in portable applications*

IEC 62133-2, *Secondary cells and batteries containing alkaline or other non-acid electrolytes – Safety requirements for portable sealed secondary lithium cells, and for batteries made from them, for use in portable applications – Part 2: Lithium systems*

IEC 62304:2006, *Medical device software – Software life cycle processes*
Amendment 1:2015

IEC 62368-1:2018, *Audio/video, information and communication technology equipment – Part 1: Safety requirements*

~~ISO 31 (all parts), *Quantities and units*~~

ISO 780, *Packaging – Pictorial marking for handling of goods*

~~ISO 1000, *SI units and recommendations for the use of their multiples and of certain other units*~~

~~13) There exists a consolidated edition 3.2, including IEC 60851-5:1996 and its Amendment 1 (1997) and Amendment 2 (2004).~~

14) There exists a consolidated edition ~~3.1~~ 3.2, including IEC 61058-1:2000 and its Amendment 1 (2001) and Amendment 2 (2007)

~~15) There exists a consolidated edition 1.1, including IEC 61558-1:1997 and its Amendment 1 (1998).~~

Copyright International Electrotechnical Commission
Provided by IHS Markit under license with IEC
No reproduction or networking permitted without license from IHS
Not for Resale, 08/26/2020 19:12:41 MDT

ISO 1853, *Conducting and dissipative rubbers, vulcanized or thermoplastic – Measurement of resistivity*

ISO 2878, *Rubber, vulcanized – Antistatic and conductive products – Determination of electrical resistance*

ISO 2882 [16], *Rubber, vulcanized – Antistatic and conductive products for hospital use – Electrical resistance limits*

ISO 3746, *Acoustics – Determination of sound power levels of noise sources using sound pressure – Survey method using an enveloping measurement surface over a reflecting plane*

ISO 3864-1:2002, *Graphical symbols – Safety colours and safety signs – Part 1: Design principles for safety signs in workplaces and public areas*

ISO 5349-1, *Mechanical vibration – Measurement and evaluation of human exposure to hand-transmitted vibration – Part 1: General requirements*

ISO 7000~~-DB:2004~~ [17], *Graphical symbols for use on equipment~~ – Collection of symbols~~*

ISO 7010:~~2003~~2019, *Graphical symbols – Safety colours and safety signs – Registered safety signs~~ used in workplaces and public areas~~*

ISO 9614-1, *Acoustics – Determination of sound power levels of noise sources using sound intensity – Measurement at discrete points*

ISO 10993 (all parts), *Biological evaluation of medical devices*

~~ISO 11134, Sterilization of health care products – Requirements for validation and routine control – Industrial moist heat sterilization~~

~~ISO 11135, Medical devices – Validation and routine control of ethylene oxide sterilization~~

ISO 11135-1:2007, *Sterilization of health care products – Ethylene oxide – Part 1: Requirements for development, validation and routine control of a sterilization process for medical devices*

~~ISO 11137, Sterilization of health care products – Requirements for validation and routine control – Radiation sterilization~~

ISO 11137-1:2006, *Sterilization of health care products – Radiation – Part 1: Requirements for development, validation and routine control of a sterilization process for medical devices*

~~ISO 13852, Safety of machinery – Safety distances to prevent danger zones being reached by the upper limbs~~

ISO 13857:2008, *Safety of machinery – Safety distances to prevent hazard zones being reached by the upper and lower limbs*

ISO 14971:~~2007~~2019, *Medical devices – Application of risk management to medical devices*

~~ISO 15223, Medical devices – Symbols to be used with medical device labels, labelling and information to be supplied~~

ISO 15223-1:2016, *Medical devices – Symbols to be used with medical device labels, labelling and information to be supplied – Part 1: General requirements*

---

[16] ISO 2882 was withdrawn on 1 February 2005 and no replacement standard has been identified.

[17] ~~"DB" refers to the joint ISO-IEC on-line database.~~

Copyright International Electrotechnical Commission
Provided by IHS Markit under license with IEC
No reproduction or networking permitted without license from IHS
Not for Resale, 08/26/2020 19:12:41 MDT

ISO 17665-1:2006, *Sterilization of health care products – Moist heat – Part 1: Requirements for the development, validation and routine control of a sterilization process for medical devices*

ISO 23529, *Rubber – General procedures for preparing and conditioning test pieces for physical test methods*

ISO 80000-1:2009, *Quantities and units – Part 1: General*

3 * Terminology and definitions

For the purposes of this document, the following terms and definitions apply.

NOTE 1 Where the terms “voltage” and “current” are used in this document, they mean the r.m.s. values of an alternating, direct or composite voltage or current unless stated otherwise.

NOTE 2 The term “electrical equipment” is used to mean ME EQUIPMENT (see 3.63) or other electrical equipment. This standard also uses the term “equipment” to mean ME EQUIPMENT or other electrical or non-electrical equipment in the context of an ME SYSTEM (see 3.64).

NOTE 3 When the term "safety" is used in this document in roman or italic type, it does not mean "safety" as defined in ISO 14971, but rather is used to mean "the state of being protected from or guarded against hurt or injury; freedom from danger”.

NOTE ~~3~~ 4 An index is found beginning on page 402.

3.1
ACCESS COVER
part of an ENCLOSURE or GUARD providing the possibility of access to electrical equipment parts for the purpose of adjustment, inspection, replacement or repair

3.2
ACCESSIBLE PART
part of electrical equipment other than an APPLIED PART that can be touched by means of the standard test finger

NOTE See also 5.9.2.1.

3.3
ACCESSORY
additional part for use with equipment in order to:

– achieve the INTENDED USE,

– adapt it to some special use,

– facilitate its use,

– enhance its performance, or

– enable its functions to be integrated with those of other equipment

[IEC 60788:2004, rm-83-06 modified]

3.4
ACCOMPANYING DOCUMENT
document accompanying ME EQUIPMENT, an ME SYSTEM, equipment or an ACCESSORY and containing information for the RESPONSIBLE ORGANIZATION or OPERATOR, particularly regarding BASIC SAFETY and ESSENTIAL PERFORMANCE

3.5
AIR CLEARANCE
shortest path in air between two conductive parts

NOTE Adapted from IEC 60664-1:2007, definition ~~1.~~3.2.

Copyright International Electrotechnical Commission
Provided by IHS Markit under license with IEC
No reproduction or networking permitted without license from IHS
Not for Resale, 08/26/2020 19:12:41 MDT

3.6
APPLIANCE COUPLER
means enabling the connection of a flexible cord to electrical equipment without the use of a TOOL, consisting of two parts: a MAINS CONNECTOR and an APPLIANCE INLET

NOTE See Figure 1.

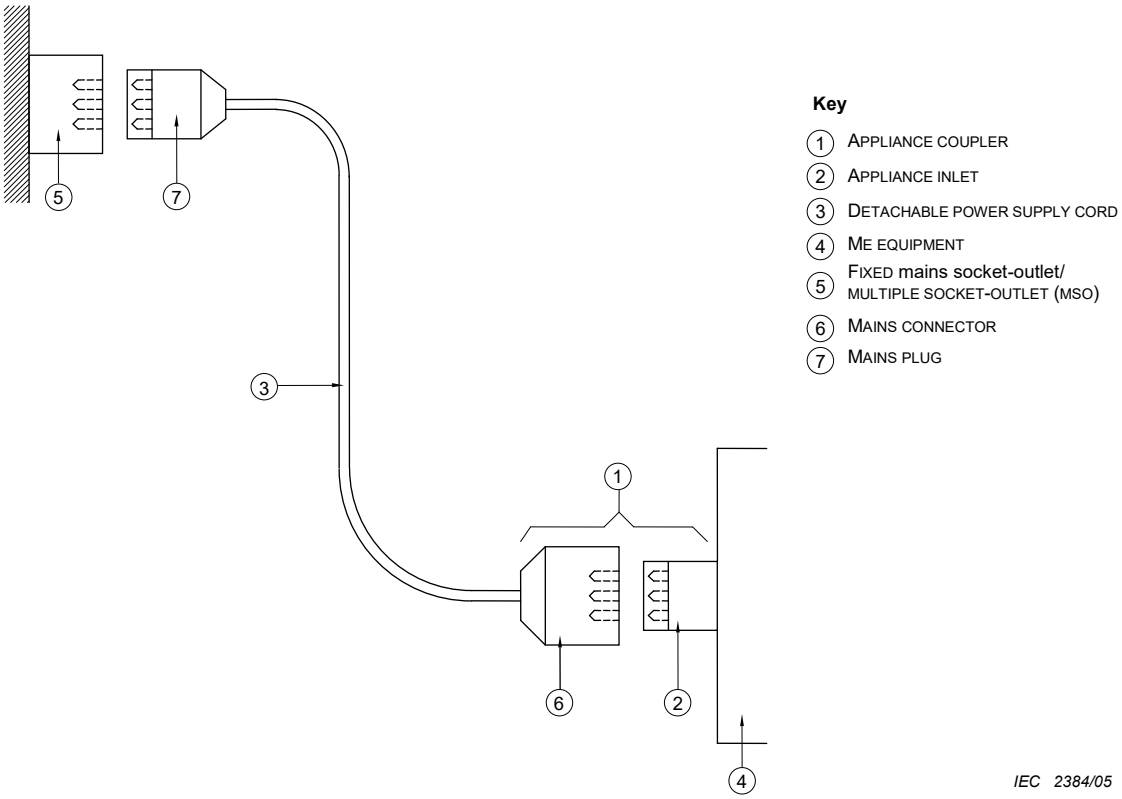

Figure 1 – Detachable mains connection
(see definitions)

3.7
APPLIANCE INLET
part of an APPLIANCE COUPLER either integrated in or FIXED to electrical equipment

NOTE See Figure 1 and Figure 2.

3.8
*** APPLIED PART**
part of ME EQUIPMENT that in NORMAL USE necessarily comes into physical contact with the PATIENT for ME EQUIPMENT or an ME SYSTEM to perform its function

NOTE 1 See Figure 3, Figure 4 and Figure A.1 to Figure A.7 (inclusive).

NOTE 2 See also 4.6 regarding the treatment of parts that do not fall within the definition of APPLIED PARTS but need to be treated as APPLIED PARTS as a result of applying the RISK MANAGEMENT PROCESS.

NOTE 3 See also 3.78 for the definition of the associated term PATIENT CONNECTION.

3.9
*** BASIC INSULATION**
insulation providing basic protection against electric shock

[IEV 826-12-14, modified]

NOTE BASIC INSULATION provides one MEANS OF PROTECTION.

Copyright International Electrotechnical Commission
Provided by IHS Markit under license with IEC
No reproduction or networking permitted without license from IHS Not for Resale, 08/26/2020 19:12:41 MDT

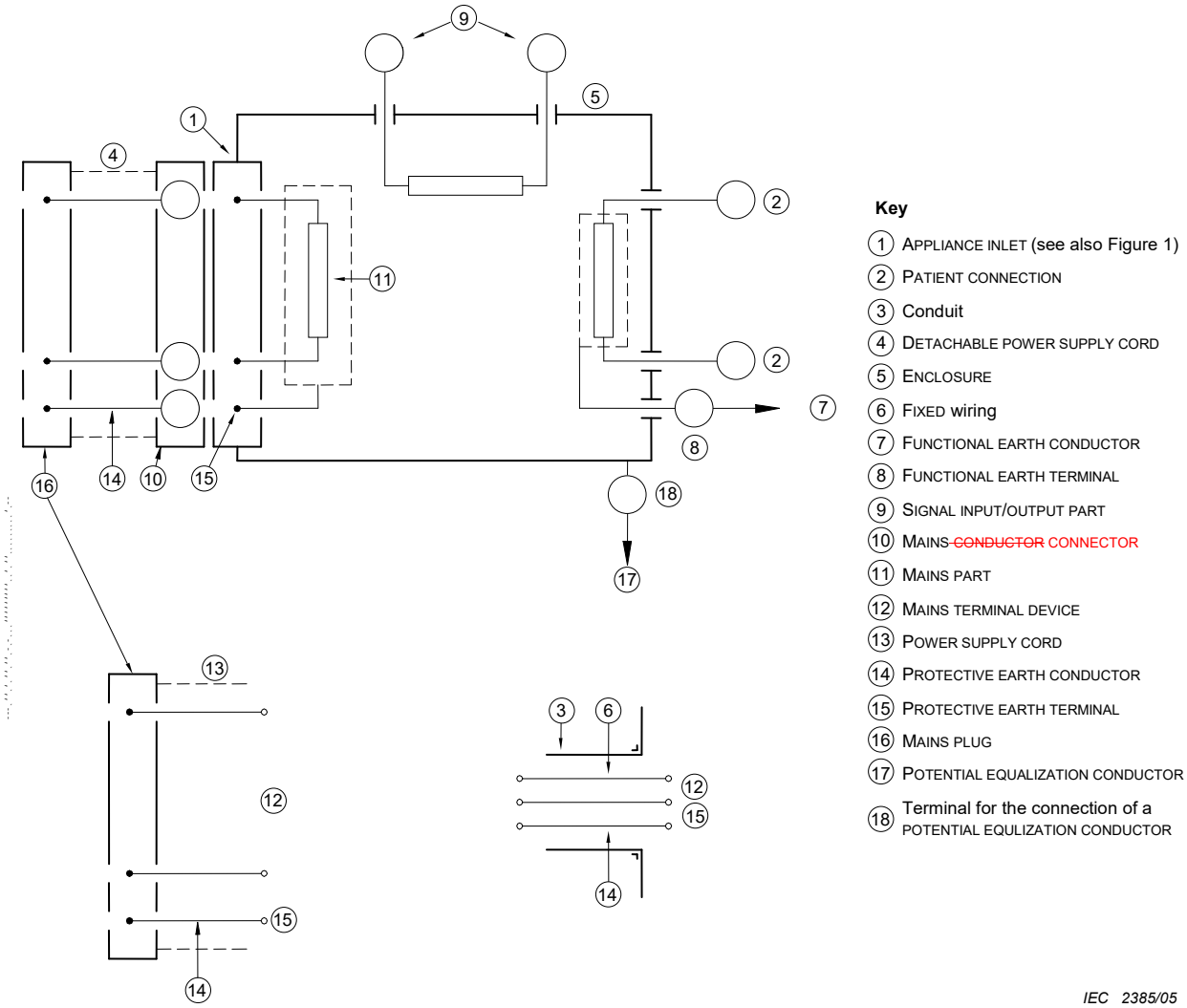

Figure 2 – Example of the defined terminals and conductors
(see definitions)

Copyright International Electrotechnical Commission
Provided by IHS Markit under license with IEC
No reproduction or networking permitted without license from IHS
Not for Resale, 08/26/2020 19:12:41 MDT

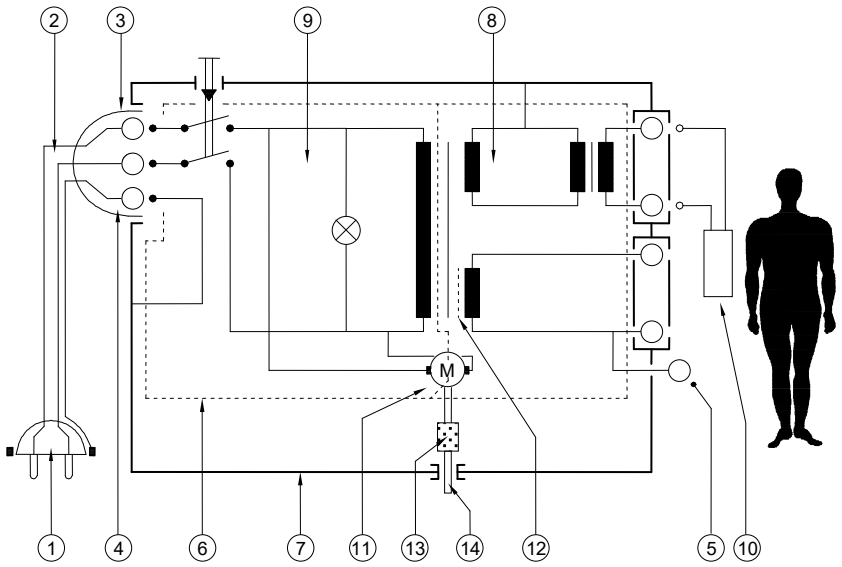

Key

1. MAINS PLUG with protective earth contact
2. DETACHABLE POWER SUPPLY CORD
3. APPLIANCE COUPLER
4. Protective earth contact and pin
5. FUNCTIONAL EARTH TERMINAL
6. BASIC INSULATION
7. ENCLOSURE
8. SECONDARY CIRCUIT
9. MAINS PART
10. APPLIED PART
11. Motor
12. PROTECTIVELY EARTHED screen
13. SUPPLEMENTARY INSULATION
14. Shaft that is an ACCESSIBLE PART

IEC 2386/05

Figure 3 – Example of a CLASS I ME EQUIPMENT
(see definitions)

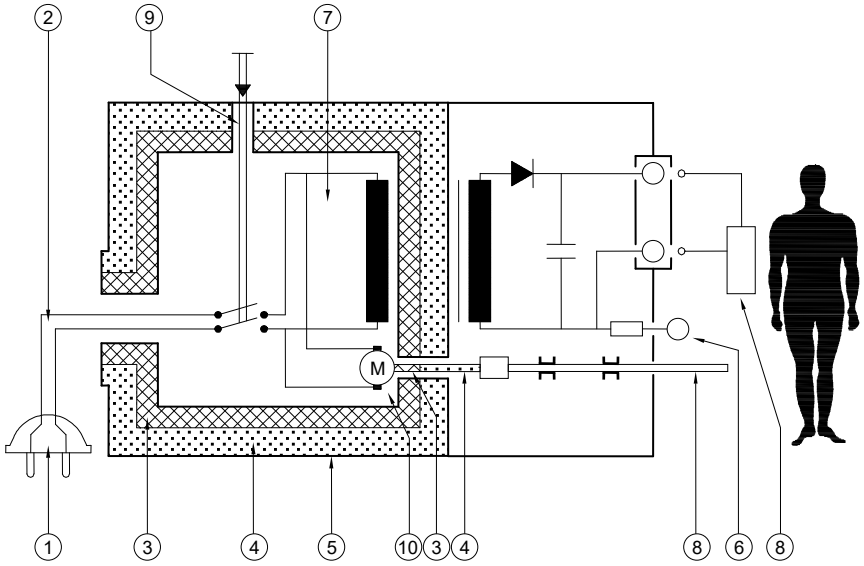

Key

1. MAINS PLUG
2. POWER SUPPLY CORD
3. BASIC INSULATION
4. SUPPLEMENTARY INSULATION
5. ENCLOSURE
6. FUNCTIONAL EARTH TERMINAL
7. MAINS PART
8. APPLIED PART
9. REINFORCED INSULATION
10. Motor

IEC 2387/05

Figure 4 – Example of a metal-enclosed CLASS II ME EQUIPMENT
(see definitions)

Copyright International Electrotechnical Commission
Provided by IHS Markit under license with IEC
No reproduction or networking permitted without license from IHS
Not for Resale, 08/26/2020 19:12:41 MDT

3.10
*** BASIC SAFETY**
freedom from unacceptable RISK directly caused by physical HAZARDS when ME EQUIPMENT is used under NORMAL CONDITION and SINGLE FAULT CONDITION

3.11
CATEGORY AP
rating for ME EQUIPMENT or an ME EQUIPMENT part complying with specified requirements on construction, marking and documentation in order to avoid sources of ignition in a FLAMMABLE ANAESTHETIC MIXTURE WITH AIR

3.12
CATEGORY APG
rating for ME EQUIPMENT or an ME EQUIPMENT part complying with specified requirements on construction, marking and documentation in order to avoid sources of ignition in a FLAMMABLE ANAESTHETIC MIXTURE WITH OXYGEN OR NITROUS OXIDE

3.13
CLASS I
term referring to electrical equipment in which protection against electric shock does not rely on BASIC INSULATION only, but which includes an additional safety precaution in that means are provided for ACCESSIBLE PARTS of metal or internal parts of metal to be PROTECTIVELY EARTHED

NOTE See Figure 3.

3.14
CLASS II
term referring to electrical equipment in which protection against electric shock does not rely on BASIC INSULATION only, but in which additional safety precautions such as DOUBLE INSULATION or REINFORCED INSULATION are provided, there being no provision for protective earthing or reliance upon installation conditions

NOTE 1 See Figure 4.

NOTE 2 CLASS II equipment can be provided with a FUNCTIONAL EARTH TERMINAL or a FUNCTIONAL EARTH CONDUCTOR. See also 8.6.8 and 8.6.9.

3.15
*** CLEARLY LEGIBLE**
capable of being read by a person with normal vision

NOTE See ~~also~~ the test in 7.1.2.

3.16
COLD CONDITION
condition obtained if electrical equipment is de-energized for a sufficiently long time to attain the ambient temperature

3.17
*** COMPONENT WITH HIGH-INTEGRITY CHARACTERISTICS**
component where one or more characteristics ensure that its function is fault-free in relation to the safety requirements of this standard during the EXPECTED SERVICE LIFE of the ME EQUIPMENT in NORMAL USE and reasonably foreseeable misuse

3.18
*** CONTINUOUS OPERATION**
operation in NORMAL USE for an unlimited period of time without the specified limits of temperature being exceeded

Copyright International Electrotechnical Commission
Provided by IHS Markit under license with IEC
No reproduction or networking permitted without license from IHS
Not for Resale, 08/26/2020 19:12:41 MDT

3.19
CREEPAGE DISTANCE
shortest distance along the surface of the insulating material between two conductive parts

[IEV 151-15-50, modified]

3.20
*** DEFIBRILLATION-PROOF APPLIED PART**
APPLIED PART that is protected against the effects of a discharge of a cardiac defibrillator to the PATIENT

3.21
*** DETACHABLE POWER SUPPLY CORD**
flexible cord intended to be connected to electrical equipment by means of a suitable APPLIANCE COUPLER for mains supply purposes

NOTE See Figure 1, Figure 2 and Figure 3.

3.22
*** DIRECT CARDIAC APPLICATION**
use of APPLIED PART that can come in direct contact with the PATIENT'S heart

3.23
*** DOUBLE INSULATION**
insulation comprising both BASIC INSULATION and SUPPLEMENTARY INSULATION

[IEV 195-06-08]

NOTE DOUBLE INSULATION provides two MEANS OF PROTECTION.

3.24
*** DUTY CYCLE**
maximum activation (on) time followed by minimum deactivation (off) time necessary for the safe operation of the ME EQUIPMENT

3.25
EARTH LEAKAGE CURRENT
current flowing from the MAINS PART through or across the insulation into the PROTECTIVE EARTH CONDUCTOR or a functional earthed connection according to 8.6.9

3.26
*** ENCLOSURE**
exterior surface of electrical equipment or parts thereof

NOTE For the purpose of testing to this standard, metal foil, with specified dimensions, applied in contact with parts of the exterior surface made of material with low conductivity or made of insulating material is considered a part of the ENCLOSURE (see Figure 2, Figure 3 and Figure 4).

3.27
*** ESSENTIAL PERFORMANCE**
~~performance necessary to achieve freedom from unacceptable RISK~~
performance of a clinical function, other than that related to BASIC SAFETY, where loss or degradation beyond the limits specified by the MANUFACTURER results in an unacceptable RISK

NOTE ESSENTIAL PERFORMANCE is most easily understood by considering whether its absence or degradation would result in an unacceptable RISK.

3.28
EXPECTED SERVICE LIFE
~~maximum period of useful life as defined by the MANUFACTURER~~
time period specified by the MANUFACTURER during which the ME EQUIPMENT or ME SYSTEM is expected to remain safe for use (i.e. maintain BASIC SAFETY and ESSENTIAL PERFORMANCE)

--`,```````,,`,``,,,,,,,,,```-`-`,,`,,`,`,,`---

Copyright International Electrotechnical Commission
Provided by IHS Markit under license with IEC
No reproduction or networking permitted without license from IHS
Not for Resale, 08/26/2020 19:12:41 MDT

NOTE Maintenance can be necessary during the EXPECTED SERVICE LIFE.

3.29

F-TYPE ISOLATED (FLOATING) APPLIED PART (herein F-TYPE APPLIED PART)

APPLIED PART in which the PATIENT CONNECTIONS are isolated from other parts of the ME EQUIPMENT to such a degree that no current higher than the allowable PATIENT LEAKAGE CURRENT flows if an unintended voltage originating from an external source is connected to the PATIENT, and thereby applied between the PATIENT CONNECTION and earth

NOTE F-TYPE APPLIED PARTS are either TYPE BF APPLIED PARTS or TYPE CF APPLIED PARTS.

3.30

FIXED

term meaning fastened or otherwise secured at a specific location either permanently or so that it can only be detached by means of a TOOL

EXAMPLE 1 Permanently affixed by welding, etc.

EXAMPLE 2 Affixed by means of fasteners (screws, nuts, etc.) making removal/opening impossible without using a TOOL.

NOTE See the taxonomy in the rationale for definition 3.63.

3.31

FLAMMABLE ANAESTHETIC MIXTURE WITH AIR

mixture of a flammable anaesthetic vapour with air in such a concentration that ignition can occur under specified conditions

3.32

FLAMMABLE ANAESTHETIC MIXTURE WITH OXYGEN OR NITROUS OXIDE

mixture of a flammable anaesthetic vapour with oxygen or with nitrous oxide in such a concentration that ignition can occur under specified conditions

3.33

*** FUNCTIONAL CONNECTION**

connection, electrical or otherwise, including those intended to transfer signals, data, power or substances

NOTE Connection to a FIXED SUPPLY MAINS socket-outlet, whether single or multiple, is not considered to result in a FUNCTIONAL CONNECTION.

3.34

FUNCTIONAL EARTH CONDUCTOR

conductor to be connected to a FUNCTIONAL EARTH TERMINAL

NOTE See Figure 2.

3.35

*** FUNCTIONAL EARTH TERMINAL**

terminal, directly connected to a circuit or to a screening part, that is intended to be earthed for functional purposes

NOTE See Figure 2, Figure 3 and Figure 4.

3.36

GUARD

part of equipment specifically used to provide protection by means of a physical barrier

NOTE Depending on its construction, a GUARD can be called a casing, cover, screen, door, enclosing guard, etc. A GUARD can act:

– alone; it is then only effective when it is in place;

– in conjunction with an interlocking device with or without guard locking; in this case, protection is ensured whatever the position of the GUARD.

Copyright International Electrotechnical Commission
Provided by IHS Markit under license with IEC
No reproduction or networking permitted without license from IHS
Not for Resale, 08/26/2020 19:12:41 MDT

3.37
HAND-HELD
~~term referring to electrical equipment intended to be supported by the hand during NORMAL USE~~
term referring to equipment that, once installed and placed into service, is intended to be supported by the hand

NOTE 1 Equipment can refer to ACCESSORIES or equipment parts.

NOTE 2 See the taxonomy in the rationale for definition 3.63.

3.38
*** HARM**
~~physical~~ injury or damage to the health of people or animals, or damage to property or the environment

[ISO 14971:~~2000~~2019, definition ~~2.2~~ 3.3, modified – "Or animals" added to the definition]

3.39
HAZARD
potential source of HARM

[ISO 14971:~~2000~~2019, definition ~~2.3~~ 3.4]

3.40
*** HAZARDOUS SITUATION**
circumstance in which people, property, or the environment is/are exposed to one or more HAZARD(S)

[~~ISO/IEC Guide 51:1999, definition 3.6~~ ISO 14971:2019, definition 3.5, modified – Note 1 to entry deleted.]

3.41
HIGH VOLTAGE
voltage over 1 000 V a.c. or over 1 500 V d.c. or over 1 500 V peak value

3.42
HYDRAULIC TEST PRESSURE
pressure applied to test a vessel or part of it

NOTE See 9.7.5.

3.43
INSULATION CO-ORDINATION
mutual correlation of insulation characteristics of electrical equipment taking into account the expected micro-environment and other influencing stresses

NOTE This includes insulation types, CREEPAGE DISTANCES, AIR CLEARANCES, distance through insulation, coatings, encapsulation, environmental aspects, etc.

3.44
*** INTENDED USE**
INTENDED PURPOSE
use ~~of~~ for which a product, PROCESS or service ~~in accordance with~~ is intended according to the specifications, instructions and information provided by the MANUFACTURER

NOTE 1 The intended medical indication, PATIENT population, part of the body or type of tissue interacted with, user profile, use environment, and operating principle are typical elements of the INTENDED USE.

NOTE 2 INTENDED USE should not be confused with NORMAL USE. While both include the concept of use as intended by the MANUFACTURER, INTENDED USE focuses on the medical purpose while NORMAL USE incorporates not only the medical purpose, but maintenance~~, service~~, transport, etc. as well.

[ISO 14971:~~2000~~2019, definition ~~2.5~~ 3.6, modified – Note 2 added.]

Copyright International Electrotechnical Commission
Provided by IHS Markit under license with IEC
No reproduction or networking permitted without license from IHS
Not for Resale, 08/26/2020 19:12:41 MDT

3.45
INTERNAL ELECTRICAL POWER SOURCE
electrical power source for operating equipment that is a part of the equipment and which produces electrical current from some other form of energy

EXAMPLE Chemical, mechanical, solar, or nuclear

NOTE An INTERNAL ELECTRICAL POWER SOURCE can be inside the principal part of equipment, attached to the outside, or contained in a separate ENCLOSURE.

3.46
INTERNALLY POWERED
term referring to electrical equipment that is able to operate from an INTERNAL ELECTRICAL POWER SOURCE

3.47
LEAKAGE CURRENT
current that is not functional

NOTE The following LEAKAGE CURRENTS are defined: EARTH LEAKAGE CURRENT, TOUCH CURRENT and PATIENT LEAKAGE CURRENT.

3.48
MAINS CONNECTOR
part of an APPLIANCE COUPLER integral with or intended to be attached to a flexible cord that is intended to be connected to the SUPPLY MAINS

NOTE A MAINS CONNECTOR is intended to be inserted into the APPLIANCE INLET of electrical equipment (see Figure 1 and Figure 2).

3.49
*** MAINS PART**
~~electrical circuit~~ part of electrical equipment forming a circuit that is intended to be connected to the SUPPLY MAINS

NOTE 1 The MAINS PART includes all conductive parts that are not separated from the SUPPLY MAINS by at least one MEANS OF PROTECTION.

NOTE 2 For the purpose of this definition, the PROTECTIVE EARTH CONDUCTOR is not regarded as a part of the MAINS PART (see Figure 2 and Figure 3).

3.50
*** MAINS PLUG**
part, integral with or intended to be attached to a POWER SUPPLY CORD of electrical equipment, to be inserted into a mains socket-outlet

NOTE 1 See Figure 1.

NOTE 2 See also IEC 60083 and IEC 60309-1 [8].

3.51
MAINS SUPPLY TRANSFORMER
static piece of equipment with two or more windings which, by electro-magnetic induction, transforms an alternating voltage and current from a SUPPLY MAINS into a voltage and current usually of different values at the same frequency

3.52
MAINS TERMINAL DEVICE
TERMINAL DEVICE by which the electrical connection to the SUPPLY MAINS is made

NOTE See Figure 2.

3.53
MAINS TRANSIENT VOLTAGE
highest peak voltage expected at the power input to the electrical equipment, arising from external transients on the SUPPLY MAINS

--`,,```,,,,````-`-`,,`,,`,`,,`---

Copyright International Electrotechnical Commission
Provided by IHS Markit under license with IEC
No reproduction or networking permitted without license from IHS Not for Resale, 08/26/2020 19:12:41 MDT

3.54
MAINS VOLTAGE
voltage of a SUPPLY MAINS between two line conductors of a polyphase system or voltage between the line conductor and the neutral conductor of a single-phase system

3.55
MANUFACTURER
natural or legal person with responsibility for the design, manufacture, packaging, or labelling of ME EQUIPMENT, assembling an ME SYSTEM, or adapting ME EQUIPMENT or an ME SYSTEM, regardless of whether these operations are performed by that person or on ~~that person's~~ his behalf by ~~a third party~~ another person(s)

NOTE 1 ~~ISO 13485 [30] defines "labelling" as written, printed or graphic matter~~

~~– affixed to a medical device or any of its containers or wrappers, or~~

~~– accompanying a medical device,~~

~~related to identification, technical description, and use of the medical device, but excluding shipping documents. In this standard, that material is described as markings and ACCOMPANYING DOCUMENTS.~~

ISO 13485 [30] defines "labelling" as "label, instructions for use, and any other information that is related to identification, technical description, INTENDED PURPOSE and proper use of the ME EQUIPMENT or ME SYSTEM, but excluding shipping documents".

NOTE 2 "Adapting" includes making substantial modifications to ME EQUIPMENT or an ME SYSTEM already in use.

NOTE 3 In some jurisdictions, the RESPONSIBLE ORGANIZATION can be considered a MANUFACTURER when involved in the activities described.

NOTE 4 Adapted from ISO 14971:~~2000~~2019, definition ~~2.6~~ 3.9.

3.56
*** MAXIMUM MAINS VOLTAGE**
voltage used for test purposes related to the voltage of the SUPPLY MAINS and connected to certain ME EQUIPMENT parts

NOTE The value for MAXIMUM MAINS VOLTAGE is determined according to 8.5.3.

3.57
*** MAXIMUM PERMISSIBLE WORKING PRESSURE**
maximum pressure permitted on a component according to a declaration of the manufacturer of such component

3.58
*** MEANS OF OPERATOR PROTECTION**
MOOP
MEANS OF PROTECTION for reducing the RISK due to electric shock to persons other than the PATIENT

3.59
*** MEANS OF PATIENT PROTECTION**
MOPP
MEANS OF PROTECTION for reducing the RISK due to electric shock to the PATIENT

3.60
*** MEANS OF PROTECTION**
MOP
means for reducing the RISK due to electric shock in accordance with the requirements of this standard

NOTE MEANS OF PROTECTION include insulation, AIR CLEARANCES, CREEPAGE DISTANCES, impedances, and PROTECTIVE EARTH CONNECTIONS.

3.61
MECHANICAL HAZARD
HAZARD connected with or produced by physical force

Copyright International Electrotechnical Commission
Provided by IHS Markit under license with IEC
No reproduction or networking permitted without license from IHS
Not for Resale, 08/26/2020 19:12:41 MDT

3.62
MECHANICAL PROTECTIVE DEVICE
device that eliminates or reduces mechanical RISK to an acceptable level and which operates in the case of SINGLE FAULT CONDITION

3.63
*** MEDICAL ELECTRICAL EQUIPMENT**
ME EQUIPMENT
electrical equipment having an APPLIED PART or transferring energy to or from the PATIENT or detecting such energy transfer to or from the PATIENT and which is:

a) provided with not more than one connection to a particular SUPPLY MAINS; and

b) intended by its MANUFACTURER to be used:

1) in the diagnosis, treatment, or monitoring of a PATIENT; or

2) for compensation or alleviation of disease, injury or disability

NOTE 1 ME EQUIPMENT includes those ACCESSORIES as defined by the MANUFACTURER that are necessary to enable the NORMAL USE of the ME EQUIPMENT.

NOTE 2 Not all electrical equipment used in medical practice falls within this definition (e.g. some in vitro diagnostic equipment).

NOTE 3 The implantable parts of active implantable medical devices can fall within this definition, but they are excluded from the scope of this standard by appropriate wording in Clause 1.

NOTE 4 This standard uses the term “electrical equipment” to mean ME EQUIPMENT or other electrical equipment.

NOTE 5 See also 4.10.1, 8.2.1 and 16.3.

3.64
*** MEDICAL ELECTRICAL SYSTEM**
ME SYSTEM
combination, as specified by its MANUFACTURER, of items of equipment, at least one of which is ME EQUIPMENT to be inter-connected by FUNCTIONAL CONNECTION or by use of a MULTIPLE SOCKET-OUTLET

NOTE Equipment, when mentioned in this standard, should be taken to include ME EQUIPMENT.

3.65
MOBILE
term referring to TRANSPORTABLE equipment that, once installed and placed into service, is intended to be moved from one location to another while supported by its own wheels or equivalent means

NOTE See the taxonomy in the rationale for definition 3.63.

3.66
*** MODEL OR TYPE REFERENCE**
combination of figures, letters or both used to identify a particular model of equipment or ACCESSORY

3.67
*** MULTIPLE SOCKET-OUTLET**
MSO
one or more socket-outlets intended to be connected to, or integral with, flexible cables, ~~or~~ cords or ME EQUIPMENT ~~for~~ providing SUPPLY MAINS or equivalent voltage

NOTE A MULTIPLE SOCKET-OUTLET can be a separate item or an integral part of equipment.

3.68
*** NETWORK/DATA COUPLING**
any means to transmit or receive information to or from other equipment in accordance with the MANUFACTURER’S specifications

Copyright International Electrotechnical Commission
Provided by IHS Markit under license with IEC
No reproduction or networking permitted without license from IHS
Not for Resale, 08/26/2020 19:12:41 MDT

3.69
NOMINAL (value)
value quoted for reference purposes that is subject to agreed tolerances

EXAMPLE NOMINAL MAINS VOLTAGE or NOMINAL diameter of a screw

3.70
NORMAL CONDITION
condition in which all means provided for protection against HAZARDS are intact

3.71
NORMAL USE
operation, including routine inspection and adjustments by any OPERATOR, and stand-by, according to the instructions for use

NOTE NORMAL USE should not be confused with INTENDED USE. While both include the concept of use as intended by the MANUFACTURER, INTENDED USE focuses on the medical purpose while NORMAL USE incorporates not only the medical purpose, but maintenance~~, service~~, transport, etc. as well.

3.72
OBJECTIVE EVIDENCE
~~information which can be proven true, based on facts obtained through observation, measurement, test or other means~~
data supporting the existence or verity of something

NOTE Objective evidence can be obtained through observation, measurement, testing or other means.

[ISO 14971:~~2000~~2019, definition ~~2.8~~ 3.11]

3.73
*** OPERATOR**
person handling equipment

NOTE See also 3.101.

3.74
OVER-CURRENT RELEASE
protective device that causes a circuit to open, with or without time-delay, when the current in the device exceeds a predetermined value

[IEV 441-16-33, modified]

3.75
*** OXYGEN RICH ENVIRONMENT**
environment in which the concentration of oxygen is:

a) greater than 25 % for ambient pressures up to 110 kPa; or

b) the partial pressure of oxygen is greater than 27,5 kPa at ambient pressures exceeding 110 kPa

3.76
PATIENT
living being (person or animal) undergoing a medical, surgical or dental procedure

NOTE A PATIENT can be an OPERATOR.

3.77
*** PATIENT AUXILIARY CURRENT**
current flowing in the PATIENT in NORMAL USE between any PATIENT CONNECTION and all other PATIENT CONNECTIONS and not intended to produce a physiological effect

Copyright International Electrotechnical Commission
Provided by IHS Markit under license with IEC
No reproduction or networking permitted without license from IHS Not for Resale, 08/26/2020 19:12:41 MDT

3.78
*** PATIENT CONNECTION**
individual point on the APPLIED PART through which current can flow between the PATIENT and the ME EQUIPMENT in NORMAL CONDITION or SINGLE FAULT CONDITION

3.79
*** PATIENT ENVIRONMENT**
any volume in which intentional or unintentional contact can occur between a PATIENT and parts of the ME EQUIPMENT or ME SYSTEM or between a PATIENT and other persons touching parts of the ME EQUIPMENT or ME SYSTEM

3.80
PATIENT LEAKAGE CURRENT
current:

– flowing from the PATIENT CONNECTIONS via the PATIENT to earth; or

– originating from the unintended appearance of a voltage from an external source on the PATIENT and flowing from the PATIENT via the PATIENT CONNECTIONS of an F-TYPE APPLIED PART to earth

3.81
*** PEAK WORKING VOLTAGE**
highest peak or d.c. value of a WORKING VOLTAGE, including repetitive peak impulses generated in the electrical equipment, but not including external transients

[IEC 60950-1:~~2001~~2005, definition ~~1.2.9.7~~ 1.2.9.8, modified]

3.82
PEMS DEVELOPMENT LIFE-CYCLE
necessary activities occurring during a period of time that starts at the concept phase of a project and finishes when the PEMS VALIDATION is complete

NOTE See also 3.90.

3.83
PEMS VALIDATION
PROCESS of evaluating a PEMS or a component of a PEMS during or at the end of the development PROCESS, to determine whether it satisfies the requirements for its INTENDED USE

NOTE See also 3.90.

3.84
PERMANENTLY INSTALLED
term meaning electrically connected to the SUPPLY MAINS by means of a permanent connection that can only be detached by the use of a TOOL

3.85
PORTABLE
term referring to TRANSPORTABLE equipment that, once installed and placed into service, is intended to be moved from one location to another while being carried by one or more persons

NOTE 1 Equipment can refer to ACCESSORIES or equipment parts.

NOTE 2 See the taxonomy in the rationale for definition 3.63.

3.86
POTENTIAL EQUALIZATION CONDUCTOR
conductor other than a PROTECTIVE EARTH CONDUCTOR or a neutral conductor, providing a direct connection between electrical equipment and the potential equalization busbar of the electrical installation

NOTE See Figure 2.

Copyright International Electrotechnical Commission
Provided by IHS Markit under license with IEC
No reproduction or networking permitted without license from IHS
Not for Resale, 08/26/2020 19:12:41 MDT

3.87
POWER SUPPLY CORD
flexible cord, FIXED to or assembled with electrical equipment for connection to SUPPLY MAINS

NOTE See Figure 1 to Figure 4 (inclusive).

3.88
PROCEDURE
specifi~~c~~ed way to ~~perform~~ carry out an activity or a PROCESS

[ISO 14971:~~2000~~2019, definition ~~2.9~~ 3.13, modified – Note 1 to entry deleted.]

3.89
PROCESS
~~set of inter-related or interacting resources and activities which transforms inputs into outputs~~
set of interrelated or interacting activities that use inputs to deliver an intended result

NOTE 1 Whether the "intended result" of a PROCESS is called output, product or service depends on the context of the reference.

NOTE 2 Inputs to a PROCESS are generally the outputs of other PROCESSES and outputs of a PROCESS are generally the inputs to other PROCESSES.

NOTE 3 Two or more interrelated and interacting PROCESSES in series can also be referred to as a PROCESS.

[ISO 14971:~~2000~~2019, definition ~~2.10~~ 3.14]

3.90
PROGRAMMABLE ELECTRICAL MEDICAL SYSTEM
PEMS
ME EQUIPMENT or an ME SYSTEM containing one or more PROGRAMMABLE ELECTRONIC SUBSYSTEMS (PESS)

3.91
PROGRAMMABLE ELECTRONIC SUBSYSTEM
PESS
system based on one or more central processing units, including their software and interfaces

3.92
PROPERLY INSTALLED
installed in accordance with the ACCOMPANYING DOCUMENTS

3.93
PROTECTIVE EARTH CONDUCTOR
conductor to be connected between the PROTECTIVE EARTH TERMINAL and an external protective earthing system

NOTE See Figure 2.

3.94
PROTECTIVE EARTH CONNECTION
connection to the PROTECTIVE EARTH TERMINAL provided for protective purposes and complying with the requirements of this standard

3.95
PROTECTIVE EARTH TERMINAL
terminal connected to conductive parts of CLASS I equipment for safety purposes. This terminal is intended to be connected to an external protective earthing system by a PROTECTIVE EARTH CONDUCTOR

NOTE See Figure 2.

Copyright International Electrotechnical Commission
Provided by IHS Markit under license with IEC
No reproduction or networking permitted without license from IHS
Not for Resale, 08/26/2020 19:12:41 MDT

3.96
PROTECTIVELY EARTHED
connected to the PROTECTIVE EARTH TERMINAL for protective purposes by means complying with the requirements of this standard

3.97
RATED (value)
term referring to a value assigned by the MANUFACTURER for a specified operating condition

3.98
RECORD
~~document which furnishes OBJECTIVE EVIDENCE of activities performed or results achieved~~
document stating results achieved or providing evidence of activities performed

NOTE 1 RECORDS can be used, for example, to formalize traceability and to provide evidence of VERIFICATION, preventive action and corrective action.

NOTE 2 Generally RECORDS need not be under revision control.

[ISO 14971:~~2000~~2019, definition ~~2.11~~ 3.16]

3.99
*** REINFORCED INSULATION**
single insulation system that provides two MEANS OF PROTECTION

3.100
RESIDUAL RISK
RISK remaining after ~~protective~~ RISK CONTROL measures have been ~~taken~~ implemented

[ISO 14971:~~2000~~2019, definition ~~2.12~~ 3.17]

3.101
RESPONSIBLE ORGANIZATION
entity accountable for the use and maintenance of an ME EQUIPMENT or an ME SYSTEM

NOTE 1 The accountable entity can be, for example, a hospital, an individual clinician or a layperson. In home use applications, the PATIENT, OPERATOR and RESPONSIBLE ORGANIZATION can be one and the same person.

NOTE 2 Education and training is included in “use.”

3.102
RISK
combination of the probability of occurrence of HARM and the SEVERITY of that HARM

[ISO 14971:~~2000~~2019, definition ~~2.13~~ 3.18]

3.103
RISK ANALYSIS
systematic use of available information to identify HAZARDS and to estimate the RISK

[ISO 14971:~~2000~~2019, definition ~~2.14~~ 3.19]

3.104
RISK ASSESSMENT
overall PROCESS comprising a RISK ANALYSIS and a RISK EVALUATION

[ISO 14971:~~2000~~ 2019, definition ~~2.15~~ 3.20]

3.105
RISK CONTROL
~~PROCESS through which decisions are reached and protective measures are implemented for reducing RISKS to, or maintaining RISKS within, specified levels~~
PROCESS in which decisions are made and measures implemented by which RISKS are reduced to, or maintained within, specified levels

Copyright International Electrotechnical Commission
Provided by IHS Markit under license with IEC
No reproduction or networking permitted without license from IHS
Not for Resale, 08/26/2020 19:12:41 MDT

[ISO 14971:~~2000~~2019, definition ~~2.16~~ 3.21]

3.106
RISK EVALUATION
~~judgement, on the basis of RISK ANALYSIS, of whether a RISK which is acceptable has been achieved in a given context based on the current values of society~~
PROCESS of comparing the estimated RISK against given RISK criteria to determine the acceptability of the RISK

[ISO 14971:~~2000~~2019, definition ~~2.17~~ 3.23]

3.107
RISK MANAGEMENT
systematic application of management policies, PROCEDURES and practices to the tasks of analysing, evaluating ~~and~~, controlling and monitoring RISK

NOTE For the purposes of this standard, RISK MANAGEMENT does not include planning for or monitoring of production and post-production information; whereas this is required for compliance with ISO 14971 (see 4.2.2).

[ISO 14971:~~2000~~2019, definition ~~2.18~~ 3.24, modified – NOTE added]

3.108
RISK MANAGEMENT FILE
set of RECORDS and other documents~~, not necessarily contiguous,~~ that are produced by ~~a~~ RISK MANAGEMENT ~~PROCESS~~

NOTE All safety related information including MANUFACTURER'S calculations, test results, etc. is considered to be part of the RISK MANAGEMENT FILE. See also 4.2.

[ISO 14971:~~2000~~2019, definition ~~2.19~~ 3.25, modified – NOTE added]

3.109
SAFE WORKING LOAD
maximum external mechanical load (mass) on equipment or an equipment part that is permitted in NORMAL USE

3.110
*** SECONDARY CIRCUIT**
circuit which is separated from the MAINS PART by at least one MEANS OF PROTECTION and derives its power from a transformer, converter or equivalent isolation device, or from an INTERNAL ELECTRICAL POWER SOURCE

NOTE See also 8.9.1.12.

3.111
SELF-RESETTING THERMAL CUT-OUT
THERMAL CUT-OUT that automatically restores the current after the relevant part of electrical equipment has cooled

3.112
*** SEPARATION DEVICE**
component or arrangement of components with input parts and output parts that, for safety reasons, prevents a transfer of unwanted voltage or current between parts of an ME SYSTEM

3.113
SERVICE PERSONNEL
individuals or entity accountable to the RESPONSIBLE ORGANIZATION that install, assemble, maintain or repair ME EQUIPMENT, ME SYSTEMS or equipment

Copyright International Electrotechnical Commission
Provided by IHS Markit under license with IEC
No reproduction or networking permitted without license from IHS
Not for Resale, 08/26/2020 19:12:41 MDT

3.114
SEVERITY
measure of the possible consequences of a HAZARD

[ISO 14971:~~2000~~2019, definition ~~2.21~~ 3.27]

3.115
*** SIGNAL INPUT/OUTPUT PART**
SIP/SOP
part of ME EQUIPMENT, not being an APPLIED PART, intended to deliver or receive signals to or from other electrical equipment, for example, for display, recording or data processing

NOTE See Figure 2.

3.116
SINGLE FAULT CONDITION
condition of ME EQUIPMENT in which a single means for reducing a RISK is defective or a single abnormal condition is present

NOTE See 4.7 and 13.2.

3.117
SINGLE FAULT SAFE
characteristic of ME EQUIPMENT or its parts whereby it remains free of unacceptable RISK during its EXPECTED SERVICE LIFE under SINGLE FAULT CONDITIONS

NOTE See 4.7.

3.118
STATIONARY
term referring to equipment that, once installed and placed into service, is not intended to be moved from one place to another

NOTE See the taxonomy in the rationale for definition 3.63.

3.119
SUPPLEMENTARY INSULATION
independent insulation applied in addition to BASIC INSULATION in order to provide protection against electric shock in the event of a failure of BASIC INSULATION

[IEV 826-12-15, modified]

NOTE SUPPLEMENTARY INSULATION provides one MEANS OF PROTECTION.

3.120
*** SUPPLY MAINS**
source of electrical energy not forming part of ME EQUIPMENT or ME SYSTEM

NOTE This also includes battery systems and converter systems in ambulances and the like.

3.121
TENSILE SAFETY FACTOR
ratio between TENSILE STRENGTH and the stress corresponding to the TOTAL LOAD

3.122
TENSILE STRENGTH
maximum tensile stress a test piece will withstand before rupturing

3.123
TERMINAL DEVICE
part of electrical equipment by which electrical connection is made

NOTE A TERMINAL DEVICE can contain several individual contacts.

Copyright International Electrotechnical Commission
Provided by IHS Markit under license with IEC
No reproduction or networking permitted without license from IHS Not for Resale, 08/26/2020 19:12:41 MDT

3.124
THERMAL CUT-OUT
device that, during an abnormal condition, limits the temperature of electrical equipment or of part of it, by automatically opening the circuit or by reducing the current, and that is so constructed that its setting cannot be altered except by qualified SERVICE PERSONNEL

3.125
THERMAL STABILITY
condition under which the temperature of an object does not increase by more than 2 °C over a period of 1 h

3.126
THERMOSTAT
temperature sensing control that is intended to keep a temperature within a specific range or above/below a preset value

3.127
TOOL
extra-corporeal object that can be used to secure or release fasteners or to make adjustments

NOTE Coins and keys are considered TOOLS within the context of this standard.

3.128
TOTAL LOAD
maximum total loading of a part including the maximum SAFE WORKING LOAD, where applicable, and the static and dynamic forces occurring in NORMAL USE

NOTE 1 Examples of dynamic forces include forces caused by acceleration or deceleration of masses.

NOTE 2 Where a load is divided over several parallel supporting parts and the distribution over these parts is not determined unequivocally, the least favourable possibility is to be considered.

3.129
TOUCH CURRENT
LEAKAGE CURRENT flowing from the ENCLOSURE or from parts thereof, excluding PATIENT CONNECTIONS, accessible to any OPERATOR or PATIENT in NORMAL USE, through an external path other than the PROTECTIVE EARTH CONDUCTOR, to earth or to another part of the ENCLOSURE

NOTE The meaning of this term is the same as that of “enclosure leakage current” in the first and second editions of this standard. The term has been changed to align with IEC 60950-1 and to reflect the fact that the measurement now applies also to parts that are normally PROTECTIVELY EARTHED.

3.130
TRANSPORTABLE
term referring to equipment that, once installed and placed into service, is intended to be moved from one place to another whether or not connected to a supply and without an appreciable restriction of range

EXAMPLE MOBILE equipment, ~~and~~ PORTABLE equipment. and BODY-WORN equipment

NOTE See the taxonomy in the rationale for definition 3.63.

3.131
TRAPPING ZONE
accessible location on or within the ME EQUIPMENT, ME SYSTEM or in the equipment environment where a human body or a part of the human body is exposed to a trapping, crushing, shearing, impact, cutting, entanglement, drawing in, stabbing or abrasion HAZARD

3.132
*** TYPE B APPLIED PART**
APPLIED PART complying with the specified requirements of this standard to provide protection against electric shock, particularly regarding allowable PATIENT LEAKAGE CURRENT and PATIENT AUXILIARY CURRENT

Copyright International Electrotechnical Commission
Provided by IHS Markit under license with IEC
No reproduction or networking permitted without license from IHS
Not for Resale, 08/26/2020 19:12:41 MDT

NOTE 1 A TYPE B APPLIED PART is marked with symbol IEC 60417-5840 (~~DB:~~2002-10) (see Table D.1, symbol 19) or, when applicable, with symbol IEC 60417-5841 (~~DB:~~2002-10) (see Table D.1, symbol 25). See also 3.20.

NOTE 2 TYPE B APPLIED PARTS are not suitable for DIRECT CARDIAC APPLICATION.

NOTE 3 See also 4.6 regarding the treatment of parts that do not fall within the definition of APPLIED PARTS but need to be considered as APPLIED PARTS as a result of applying the RISK MANAGEMENT PROCESS.

3.133

*** TYPE BF APPLIED PART**

F-TYPE APPLIED PART complying with the specified requirements of this standard to provide a higher degree of protection against electric shock than that provided by TYPE B APPLIED PARTS

NOTE 1 A TYPE BF APPLIED PART is marked with symbol IEC 60417-5333 (~~DB:~~2002-10) (see Table D.1, symbol 20) or, when applicable, with symbol 60417-5334 (~~DB:~~2002-10) (see Table D.1, symbol 26). See also 3.20.

NOTE 2 TYPE BF APPLIED PARTS are not suitable for DIRECT CARDIAC APPLICATION.

NOTE 3 See also 4.6 regarding the treatment of parts that do not fall within the definition of APPLIED PARTS but need to be considered as APPLIED PARTS as a result of applying the RISK MANAGEMENT PROCESS.

3.134

*** TYPE CF APPLIED PART**

F-TYPE APPLIED PART complying with the specified requirements of this standard to provide a higher degree of protection against electric shock than that provided by TYPE BF APPLIED PARTS

NOTE 1 A TYPE CF APPLIED PART is marked with symbol IEC 60417-5335 (~~DB:~~2002-10) (see Table D.1, symbol 21) or, when applicable, with symbol 60417-5336 (~~DB:~~2002-10) (see Table D.1, symbol 27). See also 3.20.

NOTE 2 See also 4.6 regarding the treatment of parts that do not fall within the definition of APPLIED PARTS but need to be considered as APPLIED PARTS as a result of applying the RISK MANAGEMENT PROCESS.

NOTE 3 See the rationale for the definition of DIRECT CARDIAC APPLICATION (3.22) concerning the applied parts that need to be TYPE CF APPLIED PARTS.

3.135

TYPE TEST

test on a representative sample of the equipment with the objective of determining if the equipment, as designed and manufactured, can meet the requirements of this standard

3.136

USABILITY

~~characteristic of the OPERATOR interface that establishes effectiveness, efficiency, ease of OPERATOR learning and OPERATOR learnability and satisfaction~~

~~[IEC 60601-1-6:2004, definition 2.211 IEC 62366:2007, definition 3.17, modified]~~

characteristic of the OPERATOR interface that facilitates use and thereby establishes effectiveness, efficiency, and OPERATOR satisfaction in the intended use environment

[IEC 62366-1:2015, definition 3.16, modified – Replace "user" with "OPERATOR" in two places and delete Note 1 to entry.]

3.137

USABILITY ENGINEERING

HUMAN FACTORS ENGINEERING

application of knowledge about human behaviour, abilities, limitations, and other characteristics to the design of ~~tools, machines, equipment, devices, systems, tasks, jobs, and environments~~ ME EQUIPMENT (including software), systems and tasks to achieve adequate USABILITY

[~~IEC 60601-1-6:2004, definition 2.212~~ IEC 62366-1:2007, definition 3.17, modified – Replace "medical devices" with "ME EQUIPMENT" and delete Note 1 to entry]

3.138

VERIFICATION

confirmation ~~by examination and~~, through the provision of OBJECTIVE EVIDENCE that specified requirements have been fulfilled

Copyright International Electrotechnical Commission
Provided by IHS Markit under license with IEC
No reproduction or networking permitted without license from IHS
Not for Resale, 08/26/2020 19:12:41 MDT

~~NOTE In design and development, VERIFICATION concerns the PROCESS of examining the result of a given activity to determine conformity with the stated requirements for that activity.~~

~~NOTE 1 The term "verified" is used to designate the corresponding status.~~

~~NOTE 2 Confirmation can comprise activities such as:~~

~~– performing alternative calculations;~~

~~– comparing a new design specification with a similar proven design specification;~~

~~– undertaking tests and demonstrations;~~

~~– reviewing documents prior to issue.~~

NOTE 1 The OBJECTIVE EVIDENCE needed for a VERIFICATION can be the result of an inspection or of other forms of determination such as performing alternative calculations or reviewing documents.

NOTE 2 The activities carried out for VERIFICATION are sometimes called a qualification PROCESS.

NOTE 3 The word "verified" is used to designate the corresponding status.

[ISO 14971:~~2000~~2019, definition ~~2.22~~ 2.31]

3.139
*** WORKING VOLTAGE**
highest voltage to which the insulation or the component under consideration is, or can be, subjected when the electrical equipment is operating under conditions of NORMAL USE

[IEC 60950-1:~~2001~~2005, definition 1.2.9.6]

3.140
AIR KERMA
K
quotient of dE_{tr} by dm, where dE_{tr} is the sum of the initial kinetic energies of all the charged particles liberated by uncharged particles in a mass dm of air, thus

$$K = \frac{dE_{tr}}{dm}$$

Unit: J kg^{-1}

The special name for the unit of AIR KERMA is gray (Gy) (ICRU 60)

[IEC 60601-1-3:2008, definition 3.4]

3.141
ALARM CONDITION
state of the ALARM SYSTEM when it has determined that a potential or actual HAZARDOUS SITUATION exists for which OPERATOR awareness or response is required

NOTE 1 An ALARM CONDITION can be invalid, i.e. a false positive ALARM CONDITION.

NOTE 2 An ALARM CONDITION can be missed, i.e. a false negative ALARM CONDITION.

[IEC 60601-1-8:2006 / Amendment 1 (2012), definition 3.1]

3.142
ALARM SIGNAL
type of signal generated by the ALARM SYSTEM to indicate the presence (or occurrence) of an ALARM CONDITION

[IEC 60601-1-8:2006, definition 3.9]

3.143
ALARM SYSTEM
parts of ME EQUIPMENT or a ME SYSTEM that detect ALARM CONDITIONS and, as appropriate, generate ALARM SIGNALS

[IEC 60601-1-8:2006, definition 3.11]

--`,,```,,,,````-`-`,,`,,`,`,,`---

Copyright International Electrotechnical Commission
Provided by IHS Markit under license with IEC
No reproduction or networking permitted without license from IHS Not for Resale, 08/26/2020 19:12:41 MDT

3.144
BODY-WORN
term referring to TRANSPORTABLE equipment whose INTENDED USE includes operation while being worn by a PATIENT or attached to a PATIENT'S clothing

NOTE 1 TRANSPORTABLE equipment can be both BODY-WORN and HAND-HELD.

[IEC 60601-1-11:2010, definition 3.1]

NOTE 2 See the taxonomy in the rationale for definition 3.63.

3.145
IT-NETWORK
INFORMATION TECHNOLOGY NETWORK
a system or systems composed of communicating nodes and transmission links to provide physically linked or wireless transmission between two or more specified communication nodes

[IEC 80001-1:2010, definition 2.12]

3.146
PRIMARY OPERATING FUNCTION
function that involves OPERATOR interaction that is related to the safety of the ME EQUIPMENT

[IEC 62366-1:2015, definition 3.11, modified – Replace "user" with "OPERATOR" and "medical device" with "ME EQUIPMENT", and delete Note 1 to entry and Note 2 to entry.]

3.147
USABILITY ENGINEERING FILE
set of RECORDS and other documents that are produced by the USABILITY ENGINEERING PROCESS

[IEC 62366-1:2015, definition 3.18]

3.148
ELECTROMAGNETIC DISTURBANCE
EM DISTURBANCE
any electromagnetic phenomenon that could degrade the performance of a device, equipment or system

NOTE An ELECTROMAGNETIC DISTURBANCE can be electromagnetic noise, an unwanted signal or a change in the propagation medium itself.

[IEC 60601-1-2:2014, definition 3.3]

3.149
HIGH PRIORITY
indicating that immediate OPERATOR response is required

NOTE 1 The priority is assigned through RISK ANALYSIS.

NOTE 2 Immediate implies the interruption of current workflow is expected.

[IEC 60601-1-8:2006 and IEC 60601-1-8:2006/AMD2:2020, definition 3.22, modified – Internal reference to IEC 60601-1-8, 6.1.2 in NOTE 1 deleted and bibliographic citations removed from NOTE 2.]

3.150
*** INFORMATION SIGNAL**
any signal that is not an ALARM SIGNAL or a reminder signal

EXAMPLE 1 ECG waveform

Copyright International Electrotechnical Commission
Provided by IHS Markit under license with IEC
No reproduction or networking permitted without license from IHS Not for Resale, 08/26/2020 19:12:41 MDT

EXAMPLE 2 SpO2 tone

EXAMPLE 3 Fluoroscopy beam-on indication

NOTE An advisory is a type of INFORMATION SIGNAL.

[SOURCE: IEC 60601-1-8:2006 and IEC 60601-1-8:2006/AMD2:2020, definition 3.23]

3.151
LOW PRIORITY
indicating that OPERATOR awareness is required and future action might be needed

NOTE 1 The priority is assigned through RISK ANALYSIS.

NOTE 2 Awareness implies the planning of future workflow is expected.

[IEC 60601-1-8:2006/AMD2:2020, definition 3.27, modified – Internal reference to IEC 60601-1-8, 6.1.2 in NOTE 1 deleted and bibliographic citations removed from NOTE 2.]

3.152
*** MAXIMUM EQUIPMENT PRESSURE**
the maximum gauge pressure to which a part of ME EQUIPMENT can be subjected in NORMAL CONDITION and SINGLE FAULT CONDITION

3.153
MEDIUM PRIORITY
indicating that prompt OPERATOR response is required

NOTE 1 The priority is assigned through RISK ANALYSIS.

NOTE 2 Prompt implies the re-planning of current workflow is expected.

[IEC 60601-1-8:2006 and IEC 60601-1-8:2006/AMD2:2020, definition 3.28, modified – Internal reference to IEC 60601-1-8, 6.1.2 in NOTE 1 deleted and bibliographic citations removed from NOTE 2.]

3.154
SAFETY SIGN
sign giving a general safety message, obtained by a combination of a colour and geometric shape and which, by the addition of a graphical symbol, gives a general or particular safety message

[ISO 7010:2019, definition 3.3, modified – Replace "gives a particular safety message" with " gives a general or particular safety message".]

4 General requirements

4.1 * Conditions for application to ME EQUIPMENT or ME SYSTEMS

Unless otherwise specified, the requirements of this standard shall apply in NORMAL USE and reasonably foreseeable misuse.

When applying this standard to ME EQUIPMENT or ME SYSTEMS intended for the compensation or alleviation of disease, injury or disability, the definitions and requirements that use the term PATIENT shall be considered as applying to the person for whom the ME EQUIPMENT or ME SYSTEM is intended.

4.2 * RISK MANAGEMENT PROCESS for ME EQUIPMENT or ME SYSTEMS

~~A RISK MANAGEMENT PROCESS complying with ISO 14971 shall be performed.~~

Copyright International Electrotechnical Commission
Provided by IHS Markit under license with IEC
No reproduction or networking permitted without license from IHS Not for Resale, 08/26/2020 19:12:41 MDT

~~In applying ISO 14971:~~

- ~~The term "medical device" shall assume the same meaning as ME EQUIPMENT or ME SYSTEM.~~
- ~~The term "fault conditions" referred to in ISO 14971 shall include, but shall not be limited to, SINGLE FAULT CONDITIONS identified in this standard.~~
- ~~The policy for determining acceptable RISK and the acceptability of the RESIDUAL RISK(S) shall be established by the MANUFACTURER.~~
- ~~Where this standard or any of its collateral or particular standards specify verifiable requirements addressing particular RISKS, and these requirements are complied with, the RESIDUAL RISKS addressed by these requirements shall be presumed to be acceptable unless there is OBJECTIVE EVIDENCE to the contrary.~~

~~NOTE 1 This standard specifies requirements that are generally applicable to RISKS associated with ME EQUIPMENT or ME SYSTEMS, and is intended to serve as a tool during the RISK MANAGEMENT PROCESS. The RISK MANAGEMENT PROCESS should identify not only those HAZARDS addressed by this standard, but all HAZARDS, their associated RISKS and RISK CONTROL measures.~~

~~NOTE 2 Conditions or faults that can give rise to HAZARDS are identified in the clauses of this standard. In these cases, it will often be necessary to carry out a RISK MANAGEMENT PROCESS to determine what the actual HAZARDS are and the tests that need to be done to show that the identified HAZARDS do not arise in the specified circumstances.~~

~~NOTE 3 It is recognized that the MANUFACTURER might not be able to follow all the PROCESSES identified in this standard for each constituent component of the ME EQUIPMENT or ME SYSTEM, such as proprietary components, subsystems of non-medical origin, and legacy devices. In this case, the MANUFACTURER should take special account of the need for additional RISK CONTROL measures.~~

~~NOTE 4 Where requirements of this standard refer to freedom from unacceptable RISK, acceptability or unacceptability of this RISK is determined by the MANUFACTURER in accordance with the MANUFACTURER'S policy for determining acceptable RISK.~~

~~NOTE 5 Not all the RISKS associated with ME EQUIPMENT and ME SYSTEMS are subject to specific requirements of this standard (see 1.1).~~

~~*Compliance is checked by inspection of the RISK MANAGEMENT FILE. The requirements of this clause and all requirements of this standard referring to inspection of the RISK MANAGEMENT FILE are considered to be satisfied if the MANUFACTURER has:*~~

- ~~*established a RISK MANAGEMENT PROCESS;*~~
- ~~*established acceptable levels of RISK; and*~~
- ~~*demonstrated that the RESIDUAL RISK(S) is acceptable (in accordance with the policy for determining acceptable RISK).*~~

4.2.1 Introduction to RISK MANAGEMENT

Subclause 4.2 specifies the RISK MANAGEMENT PROCESS that is required for compliance with this standard. This RISK MANAGEMENT PROCESS is intended to serve the following purposes:

a) To identify whether the normative requirements specified in Clauses 5 to 17 of this standard, together with the requirements of applicable collateral and particular standards, address all the HAZARDS associated with the particular ME EQUIPMENT or ME SYSTEM under consideration.

b) To identify the way in which some particular tests specified in this standard should be applied to a particular ME EQUIPMENT or ME SYSTEM.

c) To identify whether particular HAZARDS or HAZARDOUS SITUATIONS for which this standard does not provide specific acceptance criteria result in any RISKS for a particular ME EQUIPMENT or ME SYSTEM, and, if so, to establish acceptable RISK levels and evaluate the RESIDUAL RISKS.

d) To evaluate the acceptability of alternative RISK CONTROL strategies by comparing RESIDUAL RISK with that achieved by applying the full requirements of this standard.

Although the RISK MANAGEMENT PROCESS specified in this standard is required to comply with the relevant requirements of ISO 14971:2019, it is not as extensive as and does not include all of the elements required for compliance with ISO 14971:2019. For example, the RISK

Copyright International Electrotechnical Commission
Provided by IHS Markit under license with IEC
No reproduction or networking permitted without license from IHS
Not for Resale, 08/26/2020 19:12:41 MDT

MANAGEMENT PROCESS required for compliance with this standard does not include the production and post-production monitoring required in ISO 14971:2019. Furthermore, verification of compliance with the RISK MANAGEMENT requirements of this standard can be accomplished by examination of the RECORDS and other documentation required by this standard and assessment of the processes cited in this standard and does not require auditing of the RISK MANAGEMENT PROCESS.

4.2.2 General requirement for RISK MANAGEMENT

A RISK MANAGEMENT PROCESS complying with ISO 14971 shall be performed. For compliance with this standard, all elements of the ISO 14971:2019 RISK MANAGEMENT PROCESS shall be applied except:

– the planning for and execution of production and post-production monitoring (subclause 4.1, fourth dash, subclause 4.4, item g), and Clause 10 of ISO 14971:2019), and

– periodic reviews of the suitability of the RISK MANAGEMENT PROCESS (third paragraph of ISO 14971:2019, subclause 4.2).

When applying any of the requirements of ISO 14971:

– the term “medical device” shall assume the same meaning as ME EQUIPMENT or ME SYSTEM; and

– the term “fault conditions” referred to in ISO 14971 shall include, but shall not be limited to, SINGLE FAULT CONDITIONS identified in this standard.

NOTE 1 This standard specifies requirements that are generally applicable to RISKS associated with the ME EQUIPMENT or ME SYSTEMS. Those requirements are intended to facilitate the RISK MANAGEMENT PROCESS. The RISK MANAGEMENT PROCESS is aimed at identifying not only those HAZARDS addressed by this standard, but all HAZARDS, their associated RISKS and RISK CONTROL measures.

NOTE 2 Conditions or faults that can give rise to HAZARDOUS SITUATIONS are identified in the clauses of this standard. In these cases, it will often be necessary to carry out a RISK MANAGEMENT PROCESS to determine what the actual HAZARDOUS SITUATIONS are and the tests that need to be done to show that the identified HAZARDOUS SITUATIONS do not arise in the specified circumstances.

NOTE 3 It is recognized that the MANUFACTURER might not be able to follow all the PROCESSES identified in this standard for each constituent component of the ME EQUIPMENT or ME SYSTEM, such as proprietary components, subsystems of non-medical origin, and legacy devices. In this case, the MANUFACTURER would need to take special account of the need for additional RISK CONTROL measures.

NOTE 4 Where requirements of this standard refer to freedom from unacceptable RISK, acceptability or unacceptability of this RISK is determined by the MANUFACTURER in accordance with the MANUFACTURER’S policy for determining acceptable RISK.

NOTE 5 Not all the RISKS associated with the ME EQUIPMENT or ME SYSTEM are subject to specific requirements of this standard (see 1.1).

Compliance is checked by:

– *inspection of the MANUFACTURER'S policy for determining criteria for RISK acceptability;*

– *inspection of the RISK MANAGEMENT plan for the particular ME EQUIPMENT or ME SYSTEM under consideration; and*

– *confirming the MANUFACTURER has prepared a RISK MANAGEMENT FILE containing the RISK MANAGEMENT RECORDS and other documentation required by this standard for the particular ME EQUIPMENT or ME SYSTEM under consideration.*

NOTE 6 It is helpful to keep an index containing references or pointers to the RISK MANAGEMENT RECORDS and other documentation required by this standard.

4.2.3 Evaluating RISK

4.2.3.1 HAZARDS identified in the IEC 60601-series

The requirements of this standard shall be applied in the following way when evaluating RISK:

a) Where this standard or its collateral or particular standards specify requirements addressing particular HAZARDS or HAZARDOUS SITUATIONS, together with specific acceptance criteria, compliance with these requirements is presumed to establish that the RESIDUAL

Copyright International Electrotechnical Commission
Provided by IHS Markit under license with IEC
No reproduction or networking permitted without license from IHS Not for Resale, 08/26/2020 19:12:41 MDT

RISKS have been reduced to acceptable levels unless there is OBJECTIVE EVIDENCE to the contrary.

EXAMPLE 1 Subclause 8.5.1.2, MEANS OF PATIENT PROTECTION (MOPP)

EXAMPLE 2 Subclause 9.4.2.1, Instability in transport position

Compliance is checked by satisfying the relevant requirements of this standard and its collateral and particular standards.

b) Where this standard or its collateral or particular standards specify requirements addressing particular HAZARDS or HAZARDOUS SITUATIONS but do not provide specific acceptance criteria, the MANUFACTURER shall provide the acceptance criteria defined in the RISK MANAGEMENT plan. These acceptance criteria shall ensure that the RESIDUAL RISK is acceptable according to the criteria for RISK acceptability recorded in the RISK MANAGEMENT plan.

EXAMPLE 3 Subclause 9.8.3.3, Dynamic forces due to loading from persons

EXAMPLE 4 Subclause 11.6.3, Spillage on ME EQUIPMENT and ME SYSTEMS

Compliance is checked by confirming that the RECORDS in the RISK MANAGEMENT FILE demonstrate that, after applying the specific requirements of this standard, the acceptance criteria determined by the MANUFACTURER are satisfied. Only the relevant parts of the RISK MANAGEMENT FILE need to be reviewed, e.g. the *MANUFACTURER'S calculations or test results, or the determination of RISK acceptability.*

c) Where this standard or its collateral or particular standards identify particular HAZARDS or HAZARDOUS SITUATIONS that have to be investigated without providing specific technical requirements:

– the MANUFACTURER shall determine whether such HAZARDS or HAZARDOUS SITUATIONS exist for the particular ME EQUIPMENT or ME SYSTEM, and

– where such HAZARDS or HAZARDOUS SITUATIONS exist for the particular ME EQUIPMENT or ME SYSTEM, the MANUFACTURER shall evaluate and (if necessary) control these RISKS following the RISK MANAGEMENT PROCESS specified in 4.2.2.

EXAMPLE 5 Subclause 10.2, Alpha, beta, gamma, neutron and other particle radiation

Compliance is checked by confirming that the RECORDS in the RISK MANAGEMENT FILE demonstrate that the RESIDUAL RISK is acceptable using the criteria for RISK acceptability recorded in the RISK MANAGEMENT plan, i.e. no unacceptable RISK remains. Only the relevant parts of the RISK MANAGEMENT FILE need to be reviewed, e.g. the MANUFACTURER'S calculations or test results, or the determination of RISK acceptability.

NOTE When ME EQUIPMENT or an ME SYSTEM has been designed in such way that for a certain type of HAZARDS no HAZARDOUS SITUATION exists, no further RISK ASSESSMENT for that HAZARD is necessary. This can be verified by tests or inspections.

4.2.3.2 HAZARDS not identified in the IEC 60601 series

For HAZARDS or HAZARDOUS SITUATIONS that are identified for the particular ME EQUIPMENT or ME SYSTEM but are not specifically addressed in this standard or its collateral or particular standards, the MANUFACTURER shall address those HAZARDS in the RISK MANAGEMENT PROCESS as specified in 4.2.2.

EXAMPLE ME EQUIPMENT or an ME SYSTEM for which there are particular RISKS but no particular standard.

Compliance is checked by inspection of the RISK MANAGEMENT FILE.

4.3 * ESSENTIAL PERFORMANCE

~~The MANUFACTURER shall identify which functions of the ME EQUIPMENT and ME SYSTEMS are ESSENTIAL PERFORMANCE. Where this standard specifies that ESSENTIAL PERFORMANCE is to be~~

Copyright International Electrotechnical Commission
Provided by IHS Markit under license with IEC
No reproduction or networking permitted without license from IHS
Not for Resale, 08/26/2020 19:12:41 MDT

~~maintained following a particular test, these functions shall be used and compliance shall be checked by inspection, and if necessary, by functional test.~~

~~NOTE Where requirements of this standard refer to ESSENTIAL PERFORMANCE, that ESSENTIAL PERFORMANCE is determined by the MANUFACTURER in accordance with the MANUFACTURER'S policy for RISK acceptability.~~

~~*Compliance is checked by inspection of the RISK MANAGEMENT FILE.*~~

During RISK ANALYSIS, the MANUFACTURER shall identify the performance of the clinical function(s) of the ME EQUIPMENT or ME SYSTEM, other than that related to BASIC SAFETY, that is necessary to achieve its INTENDED USE or that could affect the safety of the ME EQUIPMENT or ME SYSTEM.

The MANUFACTURER shall then specify performance limits between fully functional and total loss of the identified performance in both NORMAL CONDITION and SINGLE FAULT CONDITION.

The MANUFACTURER shall then evaluate the RISK from the loss or degradation of the identified performance beyond the limits specified by the MANUFACTURER. If the resulting RISK is unacceptable, then the identified performance constitutes an ESSENTIAL PERFORMANCE of the ME EQUIPMENT or ME SYSTEM.

The MANUFACTURER shall implement RISK CONTROL measures to reduce the RISK from the loss or degradation of the identified performance to an acceptable level.

NOTE 1 The performance of the RISK CONTROL measure might well become an aspect of the ESSENTIAL PERFORMANCE of the ME EQUIPMENT or ME SYSTEM. For example, the generation of the ALARM SIGNAL to indicate the interruption of the SUPPLY MAINS could be "essential" if an interruption of the SUPPLY MAINS could result in an unacceptable RISK if it went unattended.

The MANUFACTURER shall specify the methods used to verify the effectiveness of the RISK CONTROL measures. This shall include any assessment made to determine whether verification is needed.

NOTE 2 Following the principles of RISK MANAGEMENT, the MANUFACTURER is required to verify the effectiveness of each RISK CONTROL measure. This can involve demonstrating that the RISK CONTROL measure will operate in the presence of the conditions that result in the loss or degradation of the identified performance.

EXAMPLE 1 If ESSENTIAL PERFORMANCE is lost because of an interruption of the SUPPLY MAINS, an ALARM SYSTEM intended to notify the OPERATOR that the SUPPLY MAINS has been interrupted would need to have a backup power source so that the generation of the ALARM SIGNAL would not depend on the SUPPLY MAINS.

EXAMPLE 2 If the failure of a component results in the loss of ESSENTIAL PERFORMANCE, the design of the ME EQUIPMENT or ME SYSTEM would need to be such that the component failure does not compromise the effectiveness of any RISK CONTROL measures put in place to mitigate the RISK from the loss of the ESSENTIAL PERFORMANCE.

NOTE 3 Each collateral standard or particular standard in the IEC 60601 or the IEC/ISO 80601 series can list potential ESSENTIAL PERFORMANCES to guide the MANUFACTURER to identify particular ESSENTIAL PERFORMANCE in accordance with 4.3.

Compliance is checked by inspection of the RISK MANAGEMENT FILE.

Where this standard requires that ESSENTIAL PERFORMANCE is to be maintained following a particular test, compliance is checked by inspection and, if necessary, by functional test(s) that demonstrate the MANUFACTURER'S specified limits are maintained or the ME EQUIPMENT or ME SYSTEM transitions to a safe state as defined by the MANUFACTURER.

4.4 * EXPECTED SERVICE LIFE

The MANUFACTURER shall state the EXPECTED SERVICE LIFE of the ME EQUIPMENT or ME SYSTEM in the RISK MANAGEMENT FILE.

Compliance is checked by inspection of the RISK MANAGEMENT FILE.

--`,,```,,,,````-`-`,,`,,`,`,,`---

Copyright International Electrotechnical Commission
Provided by IHS Markit under license with IEC
No reproduction or networking permitted without license from IHS
Not for Resale, 08/26/2020 19:12:41 MDT

4.5 ~~* Equivalent safety for ME EQUIPMENT or ME SYSTEMS~~ * Alternative RISK CONTROL measures or test methods for ME EQUIPMENT or ME SYSTEMS

~~Where this standard specifies requirements addressing particular RISKS, alternative means of addressing these RISKS are acceptable provided that the MANUFACTURER can justify that the RESIDUAL RISKS that result from applying the alternative means are equal to or less than the RESIDUAL RISKS that result from applying the requirements of this standard.~~

~~*Compliance is checked by inspection of the RISK MANAGEMENT FILE.*~~

Where this standard specifies a particular RISK CONTROL measure or test method, an alternative RISK CONTROL measure or test method is acceptable, provided that the MANUFACTURER can demonstrate through scientific data or clinical opinion or comparative studies that the RESIDUAL RISK that results from applying the alternative RISK CONTROL measure or test method remains acceptable and is comparable to the RESIDUAL RISK that results from applying the requirements of this standard.

Comparative studies in this context mean studies comparing the effect of the alternative RISK CONTROL measure or test method with the RISK CONTROL measure or test method specified in this standard.

NOTE Alternative RISK CONTROL measures can allow for exceeding limits specified in this standard or in its collateral or particular standards if additional measures for compensation are provided.

Compliance is checked by inspection of the RISK MANAGEMENT FILE.

4.6 * ME EQUIPMENT or ME SYSTEM parts that contact the PATIENT

~~The RISK MANAGEMENT PROCESS shall include an assessment of whether parts that can come into contact with the PATIENT but fall outside of the definition of APPLIED PARTS shall be subject to the requirements for APPLIED PARTS. If the RISK MANAGEMENT PROCESS determines that such parts are subject to the requirements for APPLIED PARTS, then all the relevant requirements and tests of this standard shall apply, except that 7.2.10 does not apply to such parts.~~

~~*Compliance is checked by inspection of the RISK MANAGEMENT FILE.*~~

The RISK MANAGEMENT PROCESS shall include an assessment of whether parts that can come into contact with the PATIENT but fall outside of the definition of APPLIED PARTS need to be subject to the requirements for APPLIED PARTS. For the parts concerned, the requirements for TYPE B APPLIED PART shall be applied unless the assessment identifies a need for the requirements for a TYPE BF APPLIED PART or TYPE CF APPLIED PART to apply.

If the RISK MANAGEMENT PROCESS determines that such parts are subject to the requirements for APPLIED PARTS, then all the relevant requirements and tests of this standard and of relevant collateral and particular standards shall apply, except that 7.2.10 does not apply to such parts.

Compliance is checked by inspection of the RISK MANAGEMENT FILE.

4.7 * SINGLE FAULT CONDITION for ME EQUIPMENT

ME EQUIPMENT shall be so designed and manufactured that it remains SINGLE FAULT SAFE, or the RISK remains acceptable as determined through application of 4.2.

NOTE 1 The NORMAL CONDITIONS identified in 8.1 a) are taken into consideration during evaluation of compliance with any requirement of this standard that they might affect.

ME EQUIPMENT is considered SINGLE FAULT SAFE if:

a) it employs a single means for reducing a RISK that has a negligible probability of failure (e.g. REINFORCED INSULATION, suspended masses without MECHANICAL PROTECTIVE DEVICES employing a TENSILE SAFETY FACTOR of 8X, COMPONENT WITH HIGH-INTEGRITY CHARACTERISTICS), or

Copyright International Electrotechnical Commission
Provided by IHS Markit under license with IEC
No reproduction or networking permitted without license from IHS
Not for Resale, 08/26/2020 19:12:41 MDT

b) a SINGLE FAULT CONDITION occurs, but:

- the initial fault will be detected during the EXPECTED SERVICE LIFE of the ME EQUIPMENT and before a second means for reducing a RISK fails (e.g. suspended masses with MECHANICAL PROTECTIVE DEVICES); or
- the probability that the second means of reducing the RISK will fail during the EXPECTED SERVICE LIFE of the ME EQUIPMENT is negligible.

Where a SINGLE FAULT CONDITION causes another SINGLE FAULT CONDITION, the two failures are considered as one SINGLE FAULT CONDITION.

During any test under SINGLE FAULT CONDITION, only one fault at a time shall be applied.

NOTE 2 Faults are generally divided into 3 probability categories:

a) so remote that they can be ignored. The RISKS arising from these faults are considered acceptable;

b) probable enough that they need to be considered, but improbable enough that they need only be considered one at a time (single fault). Faults of this category include all those identified as SINGLE FAULT CONDITIONS in this standard, and any other faults identified in applying ISO 14971 that meet the SINGLE FAULT CONDITION criteria;

c) so likely, so unpredictable or undetectable that they are considered to be a NORMAL CONDITION and need to be considered individually and collectively.

The results of the RISK ANALYSIS shall be used to determine which failures shall be tested. The failure of any one component at a time that could result in a HAZARDOUS SITUATION, including those mentioned in 13.1, shall be simulated, physically or theoretically. The evaluation of whether a component is subject to failure simulation shall take into account the RISK associated with the failure of the component during the EXPECTED SERVICE LIFE of the ME EQUIPMENT. This evaluation shall be accomplished by applying the principles of RISK MANAGEMENT. The evaluation shall take into account issues such as reliability, TENSILE SAFETY FACTORS and rating of components. Additionally, during the simulation of SINGLE FAULT CONDITIONS, component failures that are highly probable or undetectable shall be simulated.

NOTE 3 See also Note 2 in 4.2.

This requirement and relevant tests shall not be applied to failures of DOUBLE or REINFORCED INSULATION or COMPONENTS WITH HIGH-INTEGRITY CHARACTERISTICS.

Compliance is determined by applying the specific requirements and tests associated with the SINGLE FAULT CONDITIONS identified in 13.2, and tests for the failures identified from evaluation of the results of the RISK ANALYSIS. Compliance is confirmed if the introduction of any of the SINGLE FAULT CONDITIONS described in 13.2, one at a time, does not lead directly to the HAZARDOUS SITUATIONS described in 13.1, or any other outcome that results in an unacceptable RISK.

4.8 * Components of ME EQUIPMENT

All components, including wiring, the failure of which could result in a HAZARDOUS SITUATION shall be used in accordance with their specified ratings unless a specific exception is made in this standard or through the RISK MANAGEMENT PROCESS. The reliability of components that are used as MEANS OF PROTECTION shall be assessed for the conditions of use in the ME EQUIPMENT. They shall comply with one of the following (see also 4.5):

a) the applicable safety requirements of a relevant IEC or ISO standard;

NOTE 1 For the components, it is not necessary to carry out identical or equivalent tests already performed to check compliance with the component standard.

b) where there is no relevant IEC or ISO standard, the requirements of this standard have to be applied.

NOTE 2 If there are neither requirements in this standard nor in an IEC or ISO standard, any other applicable source (e.g. standards for other types of devices, national standards) could be used to demonstrate compliance with the RISK MANAGEMENT PROCESS.

See Figure 5 for a schematic flow chart for a) and b).

Copyright International Electrotechnical Commission
Provided by IHS Markit under license with IEC
No reproduction or networking permitted without license from IHS Not for Resale, 08/26/2020 19:12:41 MDT

Compliance is checked by inspection and, where necessary, by test. The tests of this standard for motors (see 13.2.8 and 13.2.13.3) and transformers (see 15.5.3) are considered to be comprehensive and together with the evaluation of the motor or transformer insulation system according to Table 22 represent all testing required by this standard. ME SYSTEM components that provide isolation from non-ME EQUIPMENT are evaluated to Clause 16.

4.9 * Use of COMPONENTS WITH HIGH-INTEGRITY CHARACTERISTICS in ME EQUIPMENT

A COMPONENT WITH HIGH-INTEGRITY CHARACTERISTICS shall be used when a fault in a particular component can generate an unacceptable RISK. COMPONENTS WITH HIGH-INTEGRITY CHARACTERISTICS shall be selected and evaluated consistent with their conditions of use and reasonably foreseeable misuse during the EXPECTED SERVICE LIFE of the ME EQUIPMENT.

Compliance is checked by inspection of the RISK MANAGEMENT FILE and the selection criteria for the COMPONENTS WITH HIGH-INTEGRITY CHARACTERISTICS.

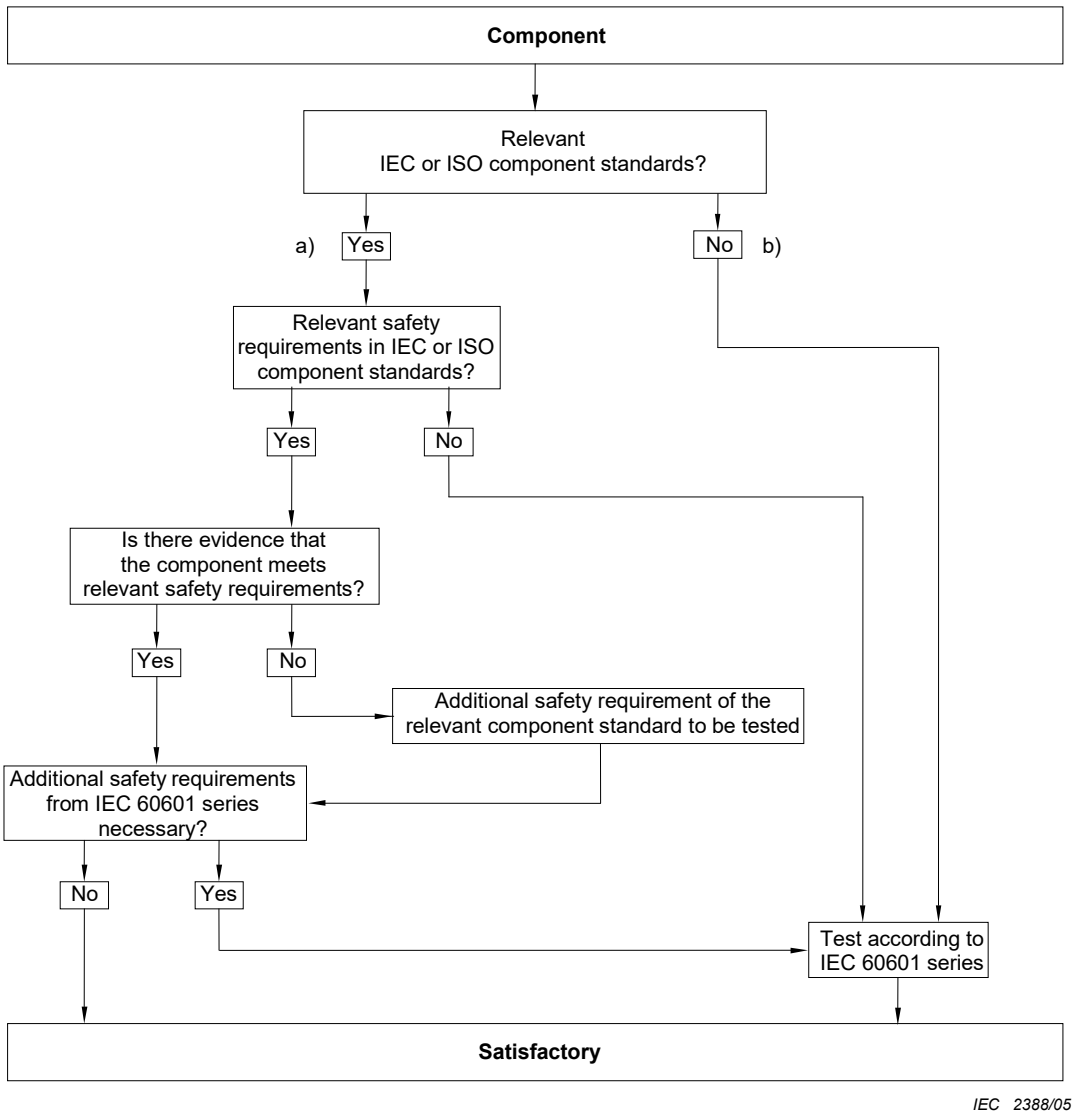

Figure 5 – Schematic flow chart for component qualification
(see 4.8)

Copyright International Electrotechnical Commission
Provided by IHS Markit under license with IEC
No reproduction or networking permitted without license from IHS Not for Resale, 08/26/2020 19:12:41 MDT

4.10 * Power supply

4.10.1 Source of power for ME EQUIPMENT

ME EQUIPMENT shall be suitable for connection to a SUPPLY MAINS, be specified for connection to a separate power supply or be powered by an INTERNAL ELECTRICAL POWER SOURCE. Alternatively, a combination of these sources may be used.

Compliance is checked by inspection of the ACCOMPANYING DOCUMENTS.

4.10.2 SUPPLY MAINS for ME EQUIPMENT and ME SYSTEMS

For ME EQUIPMENT intended to be connected to SUPPLY MAINS, the following RATED voltages shall not be exceeded:

– 250 V for HAND-HELD ME EQUIPMENT;

– 250 V d.c. or single-phase a.c. or 500 V polyphase a.c. for ME EQUIPMENT and ME SYSTEMS with a RATED input ≤ 4 kVA; or

– 500 V for all other ME EQUIPMENT and ME SYSTEMS.

SUPPLY MAINS in this standard shall be assumed to have the following characteristics:

– overvoltage category II for mains transients unless a higher category is specified by the MANUFACTURER;

– no voltage in excess of 110 % or lower than 90 % of the NOMINAL voltage between any of the conductors of the system or between any of these conductors and earth (see 7.9.3.1);

NOTE 1 IEC 60601-1-2 contains requirements and tests for voltage dips, short interruptions and voltage variations on the SUPPLY MAINS. See also 1.3.

– voltages that are practically sinusoidal and forming a practically symmetrical supply system in case of polyphase supply;

– a frequency of ≤ 1 kHz;

– a frequency deviation of ≤ 1 Hz from the NOMINAL frequency up to 100 Hz and ≤ 1 % from the NOMINAL frequency from 100 Hz to 1 kHz;

– the protective measures as described in IEC 60364-4-41;

NOTE 2 If ME EQUIPMENT or an ME SYSTEM is intended to be operated from a SUPPLY MAINS with characteristics different from the SUPPLY MAINS described in this subclause, additional safety measures could be necessary.

– a d.c. voltage (as measured by a moving coil meter or equivalent method) having a peak-to-peak ripple not exceeding 10 % of the average value.

Where peak-to-peak ripple exceeds 10 % of the average value, the peak voltage has to be applied.

4.11 Power input

The steady-state measured input of the ME EQUIPMENT or ME SYSTEM at RATED voltage and at operating settings indicated in the instructions for use shall not exceed the marked rating by more than 10 % (see 7.2.7).

Compliance is checked by inspection and by the following tests.

– *The ME EQUIPMENT or ME SYSTEM is operated as specified in the instructions for use until the input has reached a stable value. Input is measured and compared with markings and the contents of the technical description.*

– *ME EQUIPMENT or an ME SYSTEM marked with one or more RATED voltage ranges is tested at both upper and lower limits of the range, unless each marking of RATED input is related to the mean value of the relevant voltage range, in which case the test is performed at a voltage equal to the mean value of that range.*

– *The steady state current is measured with a true r.m.s. reading instrument.*

--`,,`,,`-`-`,,`,,`,`,,`---
Copyright International Electrotechnical Commission
Provided by IHS Markit under license with IEC
No reproduction or networking permitted without license from IHS Not for Resale, 08/26/2020 19:12:41 MDT

Power input, if expressed in volt-amperes, is either measured with a volt-ampere meter or determined as the product of the steady state current (measured as described above) and the supply voltage.

NOTE 1 Technical details of a true r.m.s. meter can be found in IEC 62354 [66].

~~A supplier certification may be used in place of the above measurement as the basis for steady state current or power input specification.~~

NOTE 2 Supplier information can be used to supplement the above measurement as a power input specification.

5 * General requirements for testing ME EQUIPMENT

5.1 * TYPE TESTS

The tests described in this standard are TYPE TESTS. The tests to be performed are determined taking into consideration the requirements of Clause 4, in particular 4.2.

A test need not be performed if analysis shows that the condition being tested has been adequately evaluated by other tests or methods.

~~The results of the RISK ANALYSIS are used to determine which combination(s) of simultaneous faults are to be tested.~~

The combination of simultaneous independent faults that could result in a HAZARDOUS SITUATION shall be documented in the RISK MANAGEMENT FILE (see also 4.7). When testing is necessary to demonstrate that BASIC SAFETY and ESSENTIAL PERFORMANCE are maintained under such simultaneous independent faults, the related testing may be limited to worst case situations.

NOTE 1 The test results might necessitate a revision of the RISK ANALYSIS.

NOTE 2 When considering use of tests described in this standard as routine tests, see Annex K of IEC/TR 62354 (production line tests) or see IEC 62353 (recurrent tests).

5.2 * Number of samples

TYPE TESTS are performed on a representative sample of the item being tested.

NOTE Multiple samples can be utilized simultaneously if the validity of the results is not significantly affected.

5.3 Ambient temperature, humidity, atmospheric pressure

a) After the ME EQUIPMENT to be tested has been set up for NORMAL USE (according to 5.7), tests are performed within the range of environmental conditions indicated in the technical description (see 7.9.3.1).

b) ME EQUIPMENT is shielded from other influences (for example, draughts), that might affect the validity of the tests.

c) In cases where ambient temperatures cannot be maintained, the test conditions are to be consequently modified and results adjusted accordingly.

5.4 Other conditions

a) a) Unless otherwise specified in this standard, ME EQUIPMENT is to be tested under the least favourable working conditions ~~as specified in the instructions for use that are identified during RISK ANALYSIS~~. The working conditions are specified in the ACCOMPANYING DOCUMENTS. The least favourable working conditions shall be documented for every test where they apply.

b) ME EQUIPMENT having operating values that can be adjusted or controlled by anyone other than SERVICE PERSONNEL shall be adjusted as part of the tests to values least favourable for the relevant test, but in accordance with the instructions for use.

Copyright International Electrotechnical Commission
Provided by IHS Markit under license with IEC
No reproduction or networking permitted without license from IHS
Not for Resale, 08/26/2020 19:12:41 MDT

c) If the test results are influenced by the inlet pressure and flow or chemical composition of a cooling liquid, the test is performed within the limits for these characteristics as prescribed in the technical description.

d) Where cooling water is required, potable water is used.

5.5 Supply voltages, type of current, nature of supply, frequency

a) Where test results are influenced by deviations of ~~the supply voltage~~ the characteristics of the SUPPLY MAINS from ~~its~~ their RATED values, the effect of such deviations is taken into account.

The ~~supply voltage~~ values used during ~~tests is~~ testing are according to 4.10.2 or according to that marked on the ME EQUIPMENT (see 7.2.6), whichever is least favourable.

NOTE 1 For the RATED value(s) given on the ME EQUIPMENT, deviations of the SUPPLY MAINS as provided in 4.10.2 are only to be tested if the deviations have a negative impact on BASIC SAFETY or ESSENTIAL PERFORMANCE.

b) ME EQUIPMENT having a MAINS PART intended for connection to a.c. SUPPLY MAINS is only tested with a.c. at RATED frequency ~~(if marked) ± 1 Hz up to and including 100 Hz and ± 1 % above 100 Hz.~~ ME EQUIPMENT marked with a RATED frequency range is tested at the least favourable frequency within that range.

c) ME EQUIPMENT designed for more than one RATED voltage, ~~or~~ for both a.c. and d.c., or for both external power and an INTERNAL ELECTRICAL POWER SOURCE, is tested in conditions (described in 5.4) related to the least favourable voltage and nature of supply, for example, number of phases (except for single-phase supply) and type of current. It could be necessary to perform some tests more than once in order to establish which supply configuration is least favourable.

d) ME EQUIPMENT having a MAINS PART intended for connection to d.c. SUPPLY MAINS is only tested with d.c. When performing the tests, the possible influence of polarity on the operation of the ME EQUIPMENT is taken into consideration, according to the instructions for use. See also 8.2.2.

e) ME EQUIPMENT for which alternative ACCESSORIES or components specified in the ACCOMPANYING DOCUMENTS (see 7.9.2.14 and 7.9.3.2) are available is tested with those ACCESSORIES or components that give the least favourable conditions.

f) If the instructions for use specify that ME EQUIPMENT is intended to receive its power from a separate power supply, it is connected to such a power supply. See also 7.2.5 and 8.2.1.

NOTE 2 What was referred to in the first and second editions of this standard as a “specified power supply” is now considered either as another part of the same ME EQUIPMENT or as another equipment in an ME SYSTEM.

5.6 Repairs and modifications

In the event of the necessity for repairs or modifications after a failure or a probability of future failure during the sequence of tests, the testing laboratory and the supplier of the ME EQUIPMENT for the test can agree, either upon the presentation of a new sample on which all tests influencing the result are performed again or, preferably, upon making all the necessary repairs or modifications after which only relevant tests are repeated.

5.7 * Humidity preconditioning treatment

Prior to the tests of 8.7.4 and 8.8.3, all ME EQUIPMENT or its parts shall be subjected to a humidity preconditioning treatment.

ME EQUIPMENT or its parts shall be set up complete (or where necessary partially). Covers used during transport and storage are detached.

Copyright International Electrotechnical Commission
Provided by IHS Markit under license with IEC
No reproduction or networking permitted without license from IHS Not for Resale, 08/26/2020 19:12:41 MDT

This treatment is applied only to those ME EQUIPMENT parts which are influenced by the climatic conditions that are simulated by the test.

Parts that can be detached without the use of a TOOL are detached but are treated simultaneously with the major part.

ACCESS COVERS that can be opened or detached without the use of a TOOL are opened and detached.

The humidity preconditioning treatment is performed in a humidity cabinet containing air with a relative humidity of 93 % ± 3 % where the ME EQUIPMENT or its parts under test are located. The humidity conditions at other locations in the chamber may vary by ± 6 %. The temperature of the air in the cabinet, at all places where ME EQUIPMENT or its parts can be located, ~~is~~ shall be maintained within 2 °C of any convenient value *T* in the range of + 20 °C to + ~~32~~ 30 °C. Before being placed in the humidity cabinet, ME EQUIPMENT or its parts ~~shall~~ are be brought to a temperature between *T* and *T* + 4 °C, and kept at this temperature for at least 4 h before the humidity treatment starts.

KEEP ME EQUIPMENT and its parts, where the ENCLOSURE is classified as IPX0, ~~is kept~~ in the humidity cabinet for 48 h.

Keep ME EQUIPMENT and its parts, where the ENCLOSURE is designed to provide higher ingress protection against liquids, in the humidity cabinet for 168 h.

~~Where the RISK MANAGEMENT PROCESS suggests that the ME EQUIPMENT can be exposed to high humidity for extended periods (such as ME EQUIPMENT intended for out-door use), the period is extended appropriately.~~

After the treatment, the ME EQUIPMENT is reassembled, if necessary.

5.8 Sequence of tests

Unless stated otherwise, the tests in this standard are sequenced in such a way that the results of any test do not influence the results of a subsequent test.

NOTE It is recommended that all tests be performed in the sequence given in Annex B.

5.9 * Determination of APPLIED PARTS and ACCESSIBLE PARTS

5.9.1 APPLIED PARTS

APPLIED PARTS are identified by inspection and by reference to the ACCOMPANYING DOCUMENTS See also 4.6.

5.9.2 ACCESSIBLE PARTS

5.9.2.1 * Test finger

Parts of ME EQUIPMENT that are to be regarded as ACCESSIBLE PARTS are identified by inspection and where necessary by test. In case of doubt, accessibility is determined by a test with the standard test finger shown in Figure 6, applied in a bent or straight position:

– for all positions of ME EQUIPMENT when operated as in NORMAL USE,

– even after opening of ACCESS COVERS and removal of parts, including lamps, fuses and fuseholders, without the use of a TOOL or according to the instructions for use.

The standard test finger is applied without appreciable force in every possible position, except that ME EQUIPMENT intended to be used on the floor and having a mass in any operational condition exceeding 45 kg is not tilted. ME EQUIPMENT which, according to the technical description, is intended for mounting into a cabinet, is tested in its final mounting position.

Openings preventing the entry of the standard test finger of Figure 6 are mechanically tested by means of a straight unjointed test finger of the same dimensions, which is applied with a

Copyright International Electrotechnical Commission
Provided by IHS Markit under license with IEC
No reproduction or networking permitted without license from IHS Not for Resale, 08/26/2020 19:12:41 MDT

force of 30 N. If this finger enters, the test with the standard test finger of Figure 6 is repeated, the finger being pushed through the opening if necessary.

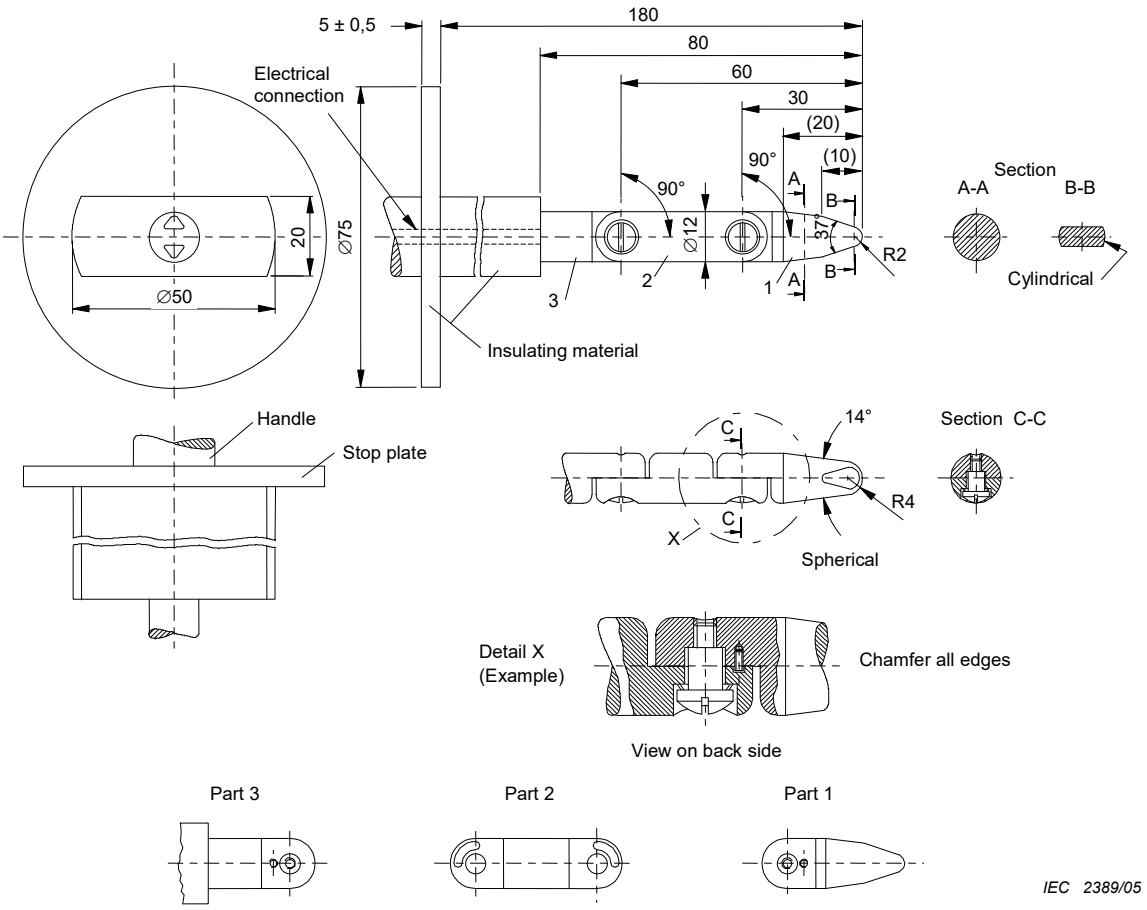

Linear dimensions in millimetres

Tolerances on dimensions without specific tolerances:

– 14° and 37° angles: ± 15′

– on radii: ± 0,1 mm

– on linear dimensions:

  ≤ 15 mm: $^{0}_{0,1}$ mm

  > 15 mm ≤ 25 mm: ± 0,1 mm

  > 25 mm: ± 0,3 mm

Material of finger: heat-treated steel, for example.

Both joints of this finger can be bent through an angle of 90 $^{+10°}_{0°}$ but in one and the same direction only.

NOTE 1 Using the pin and groove solution is only one of the possible approaches in order to limit the bending angle to 90°. For this reason, dimensions and tolerances of these details are not given in the drawing. The actual design must insure a 90° bending angle with a 0° to + 10° tolerance.

NOTE 2 Dimensions in parentheses are for information only.

NOTE 3 The test finger is taken from IEC 60950-1:2005, Figure 2A. That test finger is based on IEC 61032[18)], Figure 2, test probe B. In some cases, the tolerances are different.

Figure 6 – Standard test finger
(see 5.9.2.1)

[18)] IEC 61032:1997, *Protection of persons and equipment by enclosures - Probes for verification*

Copyright International Electrotechnical Commission
Provided by IHS Markit under license with IEC
No reproduction or networking permitted without license from IHS
Not for Resale, 08/26/2020 19:12:41 MDT

5.9.2.2 Test hook

ME EQUIPMENT openings are mechanically tested by means of the test hook (see Figure 7), if the hook can be inserted.

The test hook is inserted in all openings in question and is subsequently pulled with a force of 20 N for 10 s and in a direction substantially perpendicular to the surface in which the relevant opening is present. Any additional parts that have become accessible are identified by using the standard test finger of Figure ~~7~~ 6 and by inspection.

Dimensions in millimetres

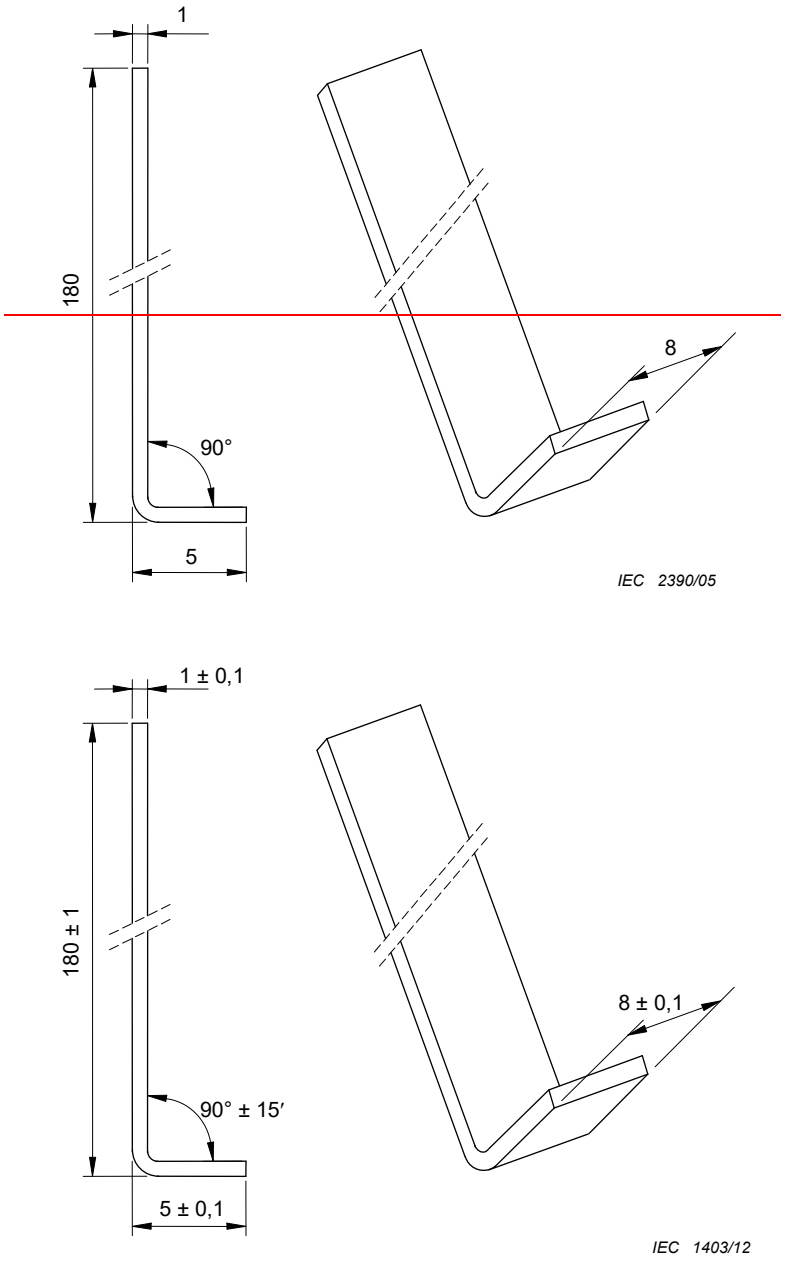

Material: steel

Figure 7 – Test hook
(see 5.9.2.2)

Copyright International Electrotechnical Commission
Provided by IHS Markit under license with IEC
No reproduction or networking permitted without license from IHS
Not for Resale, 08/26/2020 19:12:41 MDT

5.9.2.3 Actuating mechanisms

Conductive parts of actuating mechanisms of electrical controls that are accessible after the removal of handles, knobs, levers and the like are regarded as ACCESSIBLE PARTS. Conductive parts of actuating mechanisms are not considered ACCESSIBLE PARTS if removal of handles, knobs, etc. requires the use of a TOOL~~ and inspection of the RISK MANAGEMENT FILE demonstrates that the relevant part is unlikely to become detached unintentionally during the EXPECTED SERVICE LIFE of the ME EQUIPMENT. See also 15.4.6.1~~.

Compliance is checked by tests according to 5.9.2.1 and 15.4.6.1.

6 * Classification of ME EQUIPMENT and ME SYSTEMS

6.1 General

For purposes of this standard, ME EQUIPMENT, or parts thereof, including APPLIED PARTS, shall be classified as follows.

6.2 * Protection against electric shock

ME EQUIPMENT energized from an external electrical power source shall be classified as CLASS I ME EQUIPMENT or CLASS II ME EQUIPMENT (see 7.2.6). Other ME EQUIPMENT shall be classified as INTERNALLY POWERED ME EQUIPMENT.

INTERNALLY POWERED ME EQUIPMENT having a means of connection to a SUPPLY MAINS shall comply with the requirements for CLASS I ME EQUIPMENT or CLASS II ME EQUIPMENT while so connected, and with the requirements for INTERNALLY POWERED ME EQUIPMENT while not so connected.

APPLIED PARTS shall be classified as TYPE B APPLIED PARTS, TYPE BF APPLIED PARTS or TYPE CF APPLIED PARTS (see 7.2.10 and 8.3). APPLIED PARTS may be classified as DEFIBRILLATION-PROOF APPLIED PARTS (see 8.5.5).

6.3 * Protection against harmful ingress of water or particulate matter

ENCLOSURES shall be classified according to the degree of protection against harmful ingress of water and particulate matter as detailed in IEC 60529 (see 7.2.9 and 11.6.5).

NOTE 1 This classification is IPN_1N_2, where:

– N_1 is an integer indicating degree of protection against particulate matter or the letter "X".

– N_2 is an integer indicating the degree of protection against ingress of water or the letter "X".

NOTE 2 See also Table D.3.

6.4 Method(s) of sterilization

ME EQUIPMENT or its parts intended to be sterilized shall be classified according to the method(s) of sterilization as indicated in the instructions for use (see 7.9.2.12 and 11.6.7).

EXAMPLE 1 By ethylene oxide gas

EXAMPLE 2 By irradiation such as gamma ray

EXAMPLE 3 By moist heat such as by autoclave

EXAMPLE 4 By other methods validated and described by the MANUFACTURER

6.5 Suitability for use in an OXYGEN RICH ENVIRONMENT

ME EQUIPMENT and ME SYSTEMS intended for use in an OXYGEN RICH ENVIRONMENT shall be classified for such use (see 11.2.2).

6.6 * Mode of operation

ME EQUIPMENT shall be classified for either CONTINUOUS OPERATION or non-CONTINUOUS OPERATION (see 7.2.11).

--`,,`,,`-`-`,,`,,`,`,,`---

Copyright International Electrotechnical Commission
Provided by IHS Markit under license with IEC
No reproduction or networking permitted without license from IHS
Not for Resale, 08/26/2020 19:12:41 MDT

7 ME EQUIPMENT identification, marking and documents

NOTE Annex C contains a guide to assist the reader in locating the marking and labelling requirements for ME EQUIPMENT and ME SYSTEMS contained in other clauses of this standard.

7.1 General

7.1.1 * USABILITY of the identification, marking and documents

~~The MANUFACTURER shall address in a USABILITY ENGINEERING PROCESS the RISK of poor USABILITY associated with the design of the ME EQUIPMENT's identification, marking and documents. See IEC 60601-1-6 and also see 1.3 and 12.2.~~

~~*Compliance is checked by inspection of the results of the USABILITY ENGINEERING PROCESS.*~~

See 12.2.

7.1.2 * Legibility of markings

The markings required by 7.2, 7.3, 7.4, 7.5 and 7.6 shall be CLEARLY LEGIBLE under the following conditions:

– for warning statements, instructive statements, ~~safety signs~~ SAFETY SIGNS and drawings on the outside of ME EQUIPMENT: from the intended position of the person performing the related function;

– for FIXED ME EQUIPMENT: when the ME EQUIPMENT is mounted in its position of NORMAL USE;

– for TRANSPORTABLE ME EQUIPMENT and for STATIONARY ME EQUIPMENT that is not FIXED ME EQUIPMENT: in NORMAL USE or after dislodging the ME EQUIPMENT from a wall against which it has been positioned, or after turning the ME EQUIPMENT from its position of NORMAL USE and, in the case of dismountable rack units, after their removal from the rack;

– for markings on the inside of ME EQUIPMENT or ME EQUIPMENT parts: when viewed from the intended position of the person performing the related function.

Compliance for clear legibility is checked by the following test:

The ME EQUIPMENT or its part is positioned so that the viewpoint is the intended position of the OPERATOR~~; or~~. If the intended position of the OPERATOR is not specified and the position is not obvious, the viewpoint is at any point within the base of a cone subtended by an angle of 30° to the axis normal to the centre of the plane of the marking and at a distance of 1 m. The ambient ~~illuminance~~ illumination is the least favourable level in the range of 100 lx to 1 500 lx.

The observer has a visual acuity, corrected if necessary, of:

– *0 on the log Minimum Angle of Resolution (log MAR) scale or 6/6 (20/20); and*

– *is able to read N6 of the Jaeger test card*;

in normal room lighting conditions (approximately 500 lx).

The observer correctly reads the marking from the viewpoint.

7.1.3 * Durability of markings

The markings required by 7.2, 7.3, 7.4, 7.5 and 7.6 shall be removable only with a TOOL or by appreciable force and shall be sufficiently durable to remain CLEARLY LEGIBLE during the EXPECTED SERVICE LIFE of the ME EQUIPMENT. In considering the durability of the markings, the effect of NORMAL USE shall be taken into account.

Compliance is checked by inspection and the following tests:

a) *After all the tests of this standard have been performed (see the recommended sequence of tests in Annex B):*

   – *markings are tested to the requirements of 7.1.2; and*

   – *adhesive labels are not to have worked loose or become curled at the edges.*

Copyright International Electrotechnical Commission
Provided by IHS Markit under license with IEC
No reproduction or networking permitted without license from IHS Not for Resale, 08/26/2020 19:12:41 MDT

b) *For markings required by 7.2, 7.4, 7.5 and 7.6, an additional test for durability is to be performed. Markings are rubbed by hand, without undue pressure, first for 15 s with a cloth rag soaked with distilled water, then for 15 s with a cloth rag soaked with ~~methylated spirit~~ ethanol 96 % and then for 15 s with a cloth rag soaked with isopropyl alcohol.*

7.2 Marking on the outside of ME EQUIPMENT or ME EQUIPMENT parts (see also Table C.1)

7.2.1 Minimum requirements for marking on ME EQUIPMENT and on interchangeable parts

If the size of the ME EQUIPMENT, an ME EQUIPMENT part or an ACCESSORY, or the nature of its ENCLOSURE, does not allow affixation of all markings specified in 7.2.2 to 7.2.20 (inclusive), then at least the markings as indicated in 7.2.2, 7.2.5, 7.2.6 (not for PERMANENTLY INSTALLED ME EQUIPMENT), 7.2.10 and 7.2.13 (if applicable) shall be affixed and the remaining markings shall be recorded in full in the ACCOMPANYING DOCUMENTS. Where no marking of the ME EQUIPMENT is practicable, these markings may be affixed to the individual packaging.

Any material, component, ACCESSORY or ME EQUIPMENT that is intended for a single use or its packaging shall be marked "Single Use Only", “Do Not Reuse” or with symbol ISO 7000-1051 (~~DB:~~2004-01) (see Table D.1, symbol 28).

NOTE See also 7.9.2.12.

7.2.2 * Identification

~~ME EQUIPMENT and its detachable components shall be marked with the name or trademark of the MANUFACTURER, and with a MODEL OR TYPE REFERENCE unless misidentification does not present an unacceptable RISK.~~

ME EQUIPMENT shall be marked with:

– the name or trademark and contact information of the MANUFACTURER;

– a MODEL OR TYPE REFERENCE;

– a serial number or lot or batch identifier; and

– the date of manufacture or use by date, if applicable.

NOTE See ISO 15223-1 for symbols for MANUFACTURER, serial number, lot or batch, year of manufacture and use by date.

The serial number, lot or batch identifier, and the date of manufacture may be provided in a human readable code or through automatic identification technology such as barcodes or RFID.

Detachable components of the ME EQUIPMENT shall be marked with:

– the name or trademark of the MANUFACTURER; and

– a MODEL OR TYPE REFERENCE;

unless misidentification does not result in an unacceptable RISK.

Software that forms part of a PEMS shall be identified with a unique identifier, such as revision level or date of release/issue. The identification shall be available to designated persons, e.g. SERVICE PERSONNEL. The identification ~~does not need to~~ need not be on the outside of the ME EQUIPMENT.

7.2.3 * Consult ACCOMPANYING DOCUMENTS

~~When appropriate, symbol ISO 7000-1641 (DB:2004-01) (see Table D.1, symbol 11) may be used to advise the OPERATOR to consult the ACCOMPANYING DOCUMENTS. When consulting the ACCOMPANYING DOCUMENTS is a mandatory action, safety sign ISO 7010-M002 (see Table D.2, safety sign 10) shall be used instead of symbol ISO 7000-1641.~~

When the MANUFACTURER uses consulting the ACCOMPANYING DOCUMENTS as a primary RISK CONTROL measure for a specific RISK (e.g. the instructions for use contain information for

Copyright International Electrotechnical Commission
Provided by IHS Markit under license with IEC
No reproduction or networking permitted without license from IHS Not for Resale, 08/26/2020 19:12:41 MDT

safety) and the USABILITY ENGINEERING PROCESS determines that marking the ME EQUIPMENT is required for the effectiveness of the RISK CONTROL, the ME EQUIPMENT shall be marked with the refer to instruction manual/booklet mandatory action SAFETY SIGN ISO 7010-M002 (see Table D.2, SAFETY SIGN 10).

Otherwise, symbol ISO 7000-1641 (2004-01) (see Table D.1, symbol 11) may be used to advise the OPERATOR of the location of the instructions for use or to consult the ACCOMPANYING DOCUMENTS.

7.2.4 * ACCESSORIES

~~ACCESSORIES shall be marked with the name or trade-mark of their MANUFACTURER or supplier, and with a MODEL OR TYPE REFERENCE. Where no marking of the ACCESSORIES is practicable, these markings may be affixed to the individual packaging.~~

ACCESSORIES shall be marked with:

– the name or trade-mark and contact information of their MANUFACTURER

– a MODEL OR TYPE REFERENCE;

– a serial number or lot or batch identifier; and

– the date of manufacture or use by date, if applicable.

NOTE See ISO 15223-1 for symbols for MANUFACTURER, serial number, lot or batch, year of manufacture and use by date.

The serial number, lot or batch identifier, and the date of manufacture may be provided in a human readable code or through automatic identification technology such as barcodes or RFID.

Where no marking of the ACCESSORIES is practicable, these markings may be affixed to the individual packaging.

7.2.5 ME EQUIPMENT intended to receive power from other equipment

~~If ME EQUIPMENT is intended to receive its power from other equipment including ME EQUIPMENT in an ME SYSTEM and connection to another source could result in an unacceptable RISK, the MODEL OR TYPE REFERENCE of the specified other equipment shall be marked adjacent to the relevant connection point. See also 7.9.2.3, 8.2.1 and 16.3.~~

If ME EQUIPMENT is intended to receive its power from other electrical equipment in an ME SYSTEM and compliance with the requirements of this standard is dependent on that other equipment, one of the following shall be provided:

– the name or trademark of the manufacturer of the other electrical equipment with a MODEL OR TYPE REFERENCE of the specified other equipment adjacent to the relevant connection point;

– placing SAFETY SIGN ISO 7010-M002 (see Table D.2, SAFETY SIGN 10) adjacent to the relevant connection point and listing of the required details in the instructions for use; or

– using a special connector style that is not commonly available on the market and listing of the required details in the instructions for use.

See also 7.9.2.3, 8.2.1 and 16.3.

7.2.6 Connection to the SUPPLY MAINS

ME EQUIPMENT shall be marked with the following information:

– the RATED supply voltage(s) or RATED voltage range(s) to which it may be connected. A RATED supply voltage range shall have a hyphen (-) between the minimum and maximum voltages. Where multiple RATED supply voltages or multiple RATED supply voltage ranges are given, they shall be separated by a solidus (/);

Copyright International Electrotechnical Commission
Provided by IHS Markit under license with IEC
No reproduction or networking permitted without license from IHS
Not for Resale, 08/26/2020 19:12:41 MDT

EXAMPLE 1 RATED supply voltage range: 100-240 V. This means that the ME EQUIPMENT is designed to be connected to a SUPPLY MAINS having a NOMINAL voltage between 100 V and 240 V.

EXAMPLE 2 Multiple RATED supply voltage: 120/220/240 V. This means that the ME EQUIPMENT is designed to be switched to allow connection to a SUPPLY MAINS having a NOMINAL voltage of 120 V or 220 V or 240 V.

NOTE 1 Marking of RATED supply voltage is taken from IEC 61293[19].

– nature of supply, for example, number of phases (except for single-phase supply) and type of current. Symbols IEC 60417-5032, 5032-1, 5032-2, 5031, and 5033 (all ~~DB:~~2002-10) may be used for this purpose (see Table D.1, symbols 1, 2, 3, 4 and 5);

NOTE 2 For alternating current, the RATED frequency in hertz is sufficient to identify the type of current.

– the RATED supply frequency or RATED frequency range in hertz;

EXAMPLE 3 RATED supply frequency range: 50-60 Hz. This means that the ME EQUIPMENT is designed to be connected to a SUPPLY MAINS having a NOMINAL frequency between 50 Hz and 60Hz.

– For CLASS II ME EQUIPMENT, symbol IEC 60417-5172 (~~DB:~~2003-02) (see Table D.1, symbol 9).

Except for PERMANENTLY INSTALLED ME EQUIPMENT, these markings shall appear on the outside of the part that contains the SUPPLY MAINS connection and preferably adjacent to the connection point. For PERMANENTLY INSTALLED ME EQUIPMENT, the NOMINAL supply voltage or voltage range to which it can be connected may be marked on the inside or the outside of the ME EQUIPMENT, preferably adjacent to the ~~supply connection terminals~~ SUPPLY MAINS connection.

7.2.7 Electrical input power from the SUPPLY MAINS

~~The RATED input shall be given in amperes or volt-amperes or where the power factor exceeds 0,9, in watts.~~

The RATED input from the SUPPLY MAINS shall be marked on the ME EQUIPMENT. The RATED input shall be given in:

– amperes or volt-amperes, or

– if the power factor exceeds 0,9, in amperes, volt-amperes or watts.

In the case of ME EQUIPMENT for one or several RATED voltage ranges, the RATED input shall always be given for the upper and lower limits of the range or ranges, if the range(s) is/are greater than ± 10 % of the mean value of the given range.

In the case of range limits which do not differ by more than 10 % from the mean value, marking of the input at the mean value of the range is sufficient.

If the rating of ME EQUIPMENT includes both long-time and momentary current or volt-ampere ratings, the marking shall include both long-time and the most relevant momentary volt-ampere ratings, each plainly identified and indicated in the ACCOMPANYING DOCUMENTS.

The marked input of ME EQUIPMENT provided with means for the connection of supply conductors of other electrical equipment shall include the RATED (and marked) output of such means.

7.2.8 Output connectors

7.2.8.1 Mains power output

For MULTIPLE SOCKET-OUTLETS that are integral with ME EQUIPMENT, see 16.9.2.1 b).

---

[19] IEC 61293:1994, *Marking of electrical equipment with ratings related to electrical supply - Safety requirements*

Copyright International Electrotechnical Commission
Provided by IHS Markit under license with IEC
No reproduction or networking permitted without license from IHS Not for Resale, 08/26/2020 19:12:41 MDT

7.2.8.2 Other power sources

With the exception of MULTIPLE SOCKET-OUTLETS or connectors intended only for specified equipment, equipment parts or ACCESSORIES, output connectors of ME EQUIPMENT intended to deliver power shall be marked with the following information:

– RATED output voltage;

– RATED current or power (when applicable);

– output frequency (when applicable).

7.2.9 IP classification

ME EQUIPMENT or its parts shall be marked with a symbol, using the letters IP followed by the designations described in IEC 60529, according to the classification in 6.3 (see Table D.3, Code 2).

~~ME EQUIPMENT classified IPX0 or IP0X need not be marked as such.~~

If the IP classification of the ENCLOSURE of the ME EQUIPMENT or its parts is not specified (i.e. IPXX) or is specified as IP00, IPX0 or IP0X, then the ME EQUIPMENT or its parts need not be marked as such.

7.2.10 * APPLIED PARTS

This requirement does not apply to parts that have been identified according to 4.6.

The degree of protection against electric shock as classified in 6.2 for all APPLIED PARTS shall be marked with the relevant symbol, i.e., TYPE B APPLIED PARTS with symbol IEC 60417-5840, TYPE BF APPLIED PARTS with symbol IEC 60417-5333 or TYPE CF APPLIED PARTS with symbol IEC 60417-5335 (all ~~DB:~~2002-10) (see Table D.1, symbols 19, 20 and 21).

For DEFIBRILLATION-PROOF APPLIED PARTS, symbols IEC 60417-5841, IEC 60417-5334, or IEC 60417-5336 shall be used as applicable (all ~~DB:~~2002-10) (see Table D.1, symbols 25, 26 and 27).

The relevant symbol shall be marked adjacent to or on the connector for the APPLIED PART, unless either:

– there is no such connector, in which case the marking shall be on the APPLIED PART; or

– the connector is used for more than one APPLIED PART and the different APPLIED PARTS have different classifications, in which case each APPLIED PART shall be marked with the relevant symbol.

For clear differentiation with symbol IEC 60417-5333, symbol IEC 60417-5840 shall not be applied in such a way as to give the impression of being inscribed within a square (see Table D.1, symbols 19 and 20).

If the protection against the effect of the discharge of a cardiac defibrillator is partly in the PATIENT cable, ~~safety sign~~ SAFETY SIGN ISO 7010-W001, shall be placed near the relevant outlet (see Table D.2, ~~safety sign~~ SAFETY SIGN 2). The instructions for use shall explain that protection of the ME EQUIPMENT against the effects of the discharge of a cardiac defibrillator is dependent upon the use of appropriate cables.

7.2.11 Mode of operation

If no marking is provided, ME EQUIPMENT is assumed to be suitable for CONTINUOUS OPERATION. For ME EQUIPMENT intended for non-CONTINUOUS OPERATION, the DUTY CYCLE shall be indicated using an appropriate marking giving the maximum activation (on) time and the minimum deactivation (off) time.

7.2.12 * Fuses

Where the fuse-holder is an ACCESSIBLE PART, the type and full rating of the fuse (voltage, current, operating speed and breaking capacity) shall be marked adjacent to the fuse-holder.

Copyright International Electrotechnical Commission
Provided by IHS Markit under license with IEC
No reproduction or networking permitted without license from IHS
Not for Resale, 08/26/2020 19:12:41 MDT

7.2.13 Physiological effects (~~safety signs~~ SAFETY SIGNS and warning statements)

ME EQUIPMENT producing physiological effects that are not obvious to the OPERATOR and can cause HARM to the PATIENT or OPERATOR shall bear a suitable ~~safety sign~~ SAFETY SIGN (see 7.5). The ~~safety sign~~ SAFETY SIGN shall appear in a prominent location so that it will be CLEARLY LEGIBLE in NORMAL USE after the ME EQUIPMENT has been PROPERLY INSTALLED.

The instructions for use shall describe the nature of the HAZARD and the precautions for avoiding it or minimising the associated RISK.

7.2.14 HIGH VOLTAGE TERMINAL DEVICES

HIGH VOLTAGE TERMINAL DEVICES on the outside of ME EQUIPMENT that are accessible without the use of a TOOL shall be marked with symbol IEC 60417-5036 (~~DB:~~2002-10) (see Table D.1, symbol 24).

NOTE CREEPAGE DISTANCES and AIR CLEARANCES between the high voltage contacts and the standard test finger are subject to the requirements in 8.9.

7.2.15 Cooling conditions

Requirements for cooling provisions for ME EQUIPMENT (for example, supply of water or air) shall be marked.

7.2.16 Mechanical stability

For requirements on ME EQUIPMENT with a limited stability, see 9.4.

7.2.17 Protective packaging

If special handling measures have to be taken during transport or storage, the packaging shall be marked accordingly (see ISO 780).

The permissible environmental conditions for transport and storage shall be marked on the outside of the packaging (see 7.9.3.1 and ISO 15223-1).

Where premature unpacking of ME EQUIPMENT or its parts could result in an unacceptable RISK, the packaging shall be marked with a suitable ~~safety sign~~ SAFETY SIGN (see 7.5).

EXAMPLE 1 Humidity sensitive ME EQUIPMENT.

EXAMPLE 2 ME EQUIPMENT containing hazardous substances and materials.

The packaging of ME EQUIPMENT or ACCESSORIES supplied sterile shall be marked as sterile and indicate the method of sterilization (see ISO 15223-1).

7.2.18 External pressure source

~~The RATED maximum supply pressure from an external source shall be marked on the ME EQUIPMENT adjacent to each input connector.~~

Adjacent to each input connector, the ME EQUIPMENT shall be marked with:

– the RATED maximum supply pressure from an external source, and

– the RATED flow rate if required to maintain BASIC SAFETY or ESSENTIAL PERFORMANCE.

7.2.19 FUNCTIONAL EARTH TERMINALS

A FUNCTIONAL EARTH TERMINAL shall be marked with symbol IEC 60417-5017 (~~DB:2002-10~~ 2006-08) (see Table D.1, symbol 7).

7.2.20 Removable protective means

If ME EQUIPMENT has alternative applications that require the removal of a protective means to use a particular function, the protective means shall be marked to indicate the necessity for

Copyright International Electrotechnical Commission
Provided by IHS Markit under license with IEC
No reproduction or networking permitted without license from IHS
Not for Resale, 08/26/2020 19:12:41 MDT

replacement when the relevant function is no longer needed. No marking is required when an interlock is provided.

Compliance with the requirements of 7.2 is checked by inspection and by application of the tests and criteria in 7.1.2 and 7.1.3.

7.2.21 * Mass of MOBILE ME EQUIPMENT

MOBILE ME EQUIPMENT shall be marked with its mass including its SAFE WORKING LOAD in kilograms. The marking shall be done in a way that it is obvious that it applies to the whole of the MOBILE ME EQUIPMENT when loaded with its SAFE WORKING LOAD and is separate and distinct from any markings related to maximum bin, shelf or drawer loading requirements.

7.3 Marking on the inside of ME EQUIPMENT or ME EQUIPMENT parts (see also Table C.2)

7.3.1 Heating elements or lampholders

The maximum power loading of heating elements or lampholders designed for use with heating lamps shall be marked near the heater or in the heater itself.

For heating elements or lampholders designed for use with heating lamps that can be changed only by SERVICE PERSONNEL with the use of a TOOL, an identifying marking referring to information stated in the ACCOMPANYING DOCUMENTS is sufficient.

7.3.2 * HIGH VOLTAGE parts

The presence of HIGH VOLTAGE parts shall be marked with symbol IEC 60417-5036 (~~DB:~~2002-10) (see Table D.1, symbol 24) or with ~~safety sign~~ SAFETY SIGN 3 (see Table D.2, ~~safety sign~~ SAFETY SIGN 3). See also 7.5.

7.3.3 Batteries

The type of battery and the mode of insertion (if applicable) shall be marked (see 15.4.3.2).

For batteries intended to be changed only by SERVICE PERSONNEL with the use of a TOOL, an identifying marking referring to information stated in the ACCOMPANYING DOCUMENTS is sufficient.

Where lithium batteries or fuel cells are incorporated and where incorrect replacement (e.g. reversed polarity) would result in ~~an unacceptable RISK~~ a HAZARDOUS SITUATION (such as excessive temperatures, fire or explosion), a warning indicating that replacement by inadequately trained personnel could result in such a HAZARDOUS SITUATION ~~(such as excessive temperatures, fire or explosion)~~ shall be given in addition to the identifying marking referring to information stated in the ACCOMPANYING DOCUMENTS.

7.3.4 * Fuses, THERMAL CUT-OUTS and OVER-CURRENT RELEASES

Fuses and replaceable THERMAL CUT-OUTS and OVER-CURRENT RELEASES that are accessible only by the use of a TOOL shall be identified either by ~~type and full rating~~ specification adjacent to the component (voltage, current, operating speed, size, breaking capacity), or by a reference to information in the ACCOMPANYING DOCUMENTS.

The nomenclature of IEC 60127-1 may be used.

7.3.5 * PROTECTIVE EARTH TERMINALS

PROTECTIVE EARTH TERMINALS shall be marked with symbol IEC 60417-5019 (~~DB:2002-10~~ 2006-08) (see Table D.1, symbol 6) unless the PROTECTIVE EARTH TERMINAL is in an APPLIANCE INLET according to IEC 60320-1.

Markings that are on or adjacent to PROTECTIVE EARTH TERMINALS shall not be affixed to parts that have to be removed to make the connection. They shall remain visible after the connection has been made.

Copyright International Electrotechnical Commission
Provided by IHS Markit under license with IEC
No reproduction or networking permitted without license from IHS
Not for Resale, 08/26/2020 19:12:41 MDT

7.3.6 FUNCTIONAL EARTH TERMINALS

FUNCTIONAL EARTH TERMINALS shall be marked with symbol IEC 60417-5017 (~~DB:2002-10~~ 2006-08) (see Table D.1, symbol 7).

7.3.7 Supply terminals

Terminals for supply conductors shall be marked adjacent to the terminals~~ unless it can be demonstrated that no unacceptable RISK an result if connections are interchanged~~.

If ME EQUIPMENT is so small that the terminal markings cannot be affixed, they shall be included in the ACCOMPANYING DOCUMENTS.

Terminals that are provided exclusively for the connection of the neutral supply conductor in PERMANENTLY INSTALLED ME EQUIPMENT shall be marked with the appropriate code from IEC 60445 (see Table D.3, Code 1).

If marking for connection to a three-phase supply is necessary, it shall be according to IEC 60445.

Markings that are on or adjacent to electrical connection points shall not be affixed to parts that have to be removed to make the connection. They shall remain visible after the connection has been made.

7.3.8 Temperature of supply terminals

If any point within a terminal box or wiring compartment intended for connection of the power supply conductors for PERMANENTLY INSTALLED ME EQUIPMENT (including such conductors themselves), attains a temperature of more than 75 °C during NORMAL USE and NORMAL CONDITION at the maximum ambient operating temperature as indicated in the technical description (see 7.9.3.1), the ME EQUIPMENT shall be marked with the following or an equivalent statement:

"For supply connections, use wiring materials suitable for at least X °C."

where "X" is greater than the maximum temperature measured in the terminal box or wiring compartment in NORMAL USE and NORMAL CONDITION. This statement shall be located at or near the point where the supply connections are to be made. This statement shall not be affixed to parts that have to be removed to make the connection. It shall be CLEARLY LEGIBLE after the connections have been made.

Compliance with the requirements of 7.3 is checked by inspection and by application of the tests and criteria in 7.1.2 and 7.1.3.

7.4 Marking of controls and instruments (see also Table C.3)

7.4.1 * Power switches

Switches used to control power to ME EQUIPMENT~~ or its parts~~, including mains switches, shall have their "on" and "off" positions:

– marked with symbols IEC 60417-5007 (~~DB:~~2002-10) and IEC 60417-5008 (~~DB:~~2002-10) (see Table D.1, symbols 12 and 13); or

– indicated by an adjacent indicator light; or

– indicated by other unambiguous means.

Switches used to control power to parts of ME EQUIPMENT shall have their "on" and "off" positions:

– marked with symbols as specified above; or

– with IEC 60417-5264 (2002-10) and IEC 60417-5265 (2002-10) (see Table D.1, symbols 16 and 17); or

– indicated by an adjacent indicator light; or

Copyright International Electrotechnical Commission
Provided by IHS Markit under license with IEC
No reproduction or networking permitted without license from IHS
Not for Resale, 08/26/2020 19:12:41 MDT

– indicated by other unambiguous means.

A switch that brings the ME EQUIPMENT into the "stand-by" condition may be indicated by use of symbol IEC 60417-5009 (2015-03) (see Table D.1, Symbol 29).

If a push button with bistable positions is used:

– it shall be marked with symbol IEC 60417-5010 (~~DB:~~2002-10) (see Table D.1, symbol 14); and
– the status shall be indicated by an adjacent indicator light; or
– the status shall be indicated by other unambiguous means.

If a push button with momentary on position is used:

– it shall be marked with symbol 60417-5011 (~~DB:~~2002-10) (see Table D.1, symbol 15); or
– the status shall be indicated by an adjacent indicator light; or
– the status shall be indicated by other unambiguous means.

7.4.2 * Control devices

Different positions of control devices and different positions of switches on ME EQUIPMENT shall be indicated by figures, letters or other visual means, ~~e.g. by use of symbols IEC 60417-5264 (DB:2002-10) and IEC 60417-5265 (DB:2002-10) (see Table D.1, symbols 16 and 17)~~.

If in NORMAL USE, the change of setting of a control could result in an unacceptable RISK to the PATIENT, such controls shall be provided with either:

– an associated indicating device, e.g. instruments or scale, or
– an indication of the direction in which the magnitude of the function changes. See also 15.4.6.2.

~~A control device or switch that brings the ME EQUIPMENT into the "stand-by" condition may be indicated by use of symbol IEC 60417-5009 (2002-10) (see Table D.1, Symbol 29).~~

7.4.3 Units of ~~measure~~ measurement

Numeric indications of parameters on ME EQUIPMENT shall be expressed in SI units according to ISO ~~31~~ 80000-1 except the base quantities listed in Table 1 may be expressed in the indicated units, which are outside the SI units system.

For application of SI units, their multiples and certain other units, ISO ~~1000~~ 80000-1 applies.

Compliance with the requirements of 7.4 is checked by inspection and by application of the tests and criteria in 7.1.2 and 7.1.3.

--`,,`,,`-`-`,,`,,`,`,,`---

Copyright International Electrotechnical Commission
Provided by IHS Markit under license with IEC
No reproduction or networking permitted without license from IHS
Not for Resale, 08/26/2020 19:12:41 MDT

Table 1 – Units outside the SI units system that may be used on ME EQUIPMENT

Base quantity	Unit	
	Name	Symbol
Plane angle	revolution	r
	gon	gon or grade
	degree	°
	minute of angle	′
	second of angle	″
Time	minute	min
	hour	h
	day	d
Energy	electron volt	eV
Volume	litre	l [a]
Pressure of respiratory gases, blood, and other body fluids	millimetres of mercury	mmHg
	centimetres of water	cmH_2O
Pressure of gases	bar	bar
	millibar	mbar

[a] For consistency, in international standards only the symbol "l" is used for litre, although the symbol "L" is also given in ISO ~~31~~ 80000-1.

7.5 ~~Safety signs~~ SAFETY SIGNS

For the purpose of this clause, markings used to convey a warning, prohibition or mandatory action that mitigates a RISK that is not obvious to the OPERATOR shall be a ~~safety sign~~ SAFETY SIGN selected from ISO 7010. If a SAFETY SIGN with an established meaning is appropriately used, the use of the general warning sign ISO 7010:2003-W001 (see Table D.2, SAFETY SIGN 2) is not required.

NOTE 1 In this context, warning is used to mean, "There is certain danger"; prohibition is used to mean, "You must not…"; and mandatory action is used to mean, "You must…".

Where a ~~safety sign~~ SAFETY SIGN is not available to indicate a particular desired meaning, the meaning may be obtained by one of the following methods.

a) Constructing a ~~safety sign~~ SAFETY SIGN according to ISO 3864-1:2002, Clause 7 (for the corresponding templates, see Table D.2, ~~safety signs~~ SAFETY SIGNS 1, 4 and 8).

b) Using the general warning sign ISO 7010:2003-W001 (see Table D.2, ~~safety sign~~ SAFETY SIGN 2) placed together with a supplementary symbol or text. The text associated with the general warning sign shall be an affirmative statement (i.e., a safety notice) describing the principal RISK(S) foreseen (e.g. "Causes burns", "Risk of explosion", etc.).

c) Using the general prohibition sign ISO 7010:2003-P001 (see Table D.2, ~~safety sign~~ SAFETY SIGN 4) placed together with a supplementary symbol or text. The text associated with the general prohibition sign shall be a statement (i.e. a safety notice) describing what is prohibited (e.g. "Do not open", "Do not drop", etc.).

d) Using the general mandatory action sign ISO 7010:2003-M001 (see Table D.2, ~~safety sign~~ SAFETY SIGN 9) placed together with a supplementary symbol or text. The text associated

Copyright International Electrotechnical Commission
Provided by IHS Markit under license with IEC
No reproduction or networking permitted without license from IHS
Not for Resale, 08/26/2020 19:12:41 MDT

with the general mandatory action sign shall be a command (i.e. a safety notice) describing required action (e.g. “Wear protective gloves”, “Scrub before entering”, etc.).

If there is insufficient space to place the affirmative statement together with the ~~safety sign~~ SAFETY SIGN on the ME EQUIPMENT, it may be placed in the instructions for use.

NOTE 2 The colours for ~~safety signs~~ SAFETY SIGNS are specified in ISO 3864-1 and it is important to use the specified colour.

NOTE 3 A safety notice should include the appropriate precautions or include instructions on how to reduce the RISK (e.g. “Do not use for . . . ”, “Keep away from . . .”, etc.).

~~Safety signs~~ SAFETY SIGNS, including any supplementary symbol or text, shall be explained in the instructions for use (see 7.9.2).

When supplementary text is placed together with SAFETY SIGNS, the supplementary text shall be in a language that is acceptable to the intended OPERATOR.

NOTE 4 In some countries, more than one language is required.

Compliance is checked by inspection.

7.6 Symbols

7.6.1 Explanation of symbols

The meanings of the symbols used for marking shall be explained in the instructions for use.

7.6.2 Symbols from Annex D

Symbols required by this standard shall conform to the requirements in the referenced IEC or ISO publication. Annex D provides the symbol graphic and description for these symbols as a quick reference.

7.6.3 Symbols for controls and performance

Symbols used for controls and performance shall conform to the requirements of the IEC or ISO publication where the symbol is defined, when applicable. See also 7.2.13.

NOTE IEC 60878 [60] provides a survey of titles, descriptions and graphical representations of symbols for electrical equipment used in medical practice.

Compliance with the requirements of 7.6 is checked by inspection.

7.7 Colours of the insulation of conductors

7.7.1 PROTECTIVE EARTH CONDUCTOR

A PROTECTIVE EARTH CONDUCTOR shall be identified throughout its length by green and yellow coloured insulation.

7.7.2 PROTECTIVE EARTH CONNECTIONS

Any insulation on conductors inside ME EQUIPMENT that form PROTECTIVE EARTH CONNECTIONS shall be identified by the colours green and yellow at least at the termination of the conductors.

EXAMPLE Conductors of a multi-conductor cord that are connected in parallel, where the maximum allowed resistance of the PROTECTIVE EARTH CONNECTIONS would be exceeded if only the green and yellow coloured conductor were used.

7.7.3 Green and yellow insulation

Identification by green and yellow insulation shall only be used for:

– PROTECTIVE EARTH CONDUCTORS (see 8.6.2);

– conductors as specified in 7.7.2;

--`,,```,,,,````-`-`,,`,,`,`,,`---

Copyright International Electrotechnical Commission
Provided by IHS Markit under license with IEC
No reproduction or networking permitted without license from IHS
Not for Resale, 08/26/2020 19:12:41 MDT

NOTE In other safety standards such as IEC 60950-1, internal connections between conductive parts and the main protective earth are called protective bonding conductors.

– POTENTIAL EQUALIZATION CONDUCTORS (see 8.6.7);

– FUNCTIONAL EARTH CONDUCTORS (see 8.6.9).

7.7.4 Neutral conductor

Conductors in POWER SUPPLY CORDS intended to be connected to the neutral conductor of the supply system shall be coloured “light blue” as specified in IEC 60227-1 or in IEC 60245-1.

7.7.5 POWER SUPPLY CORD conductors

Colours of conductors in POWER SUPPLY CORDS shall be in accordance with IEC 60227-1 or with IEC 60245-1.

Compliance with the requirements of 7.7 is checked by inspection.

7.8 * Indicator lights and controls

7.8.1 * Colours of indicator lights

The colours of indicator lights and their meanings shall comply with Table 2.

NOTE IEC 60601-1-8 contains specific requirement for the colour, flashing frequency and DUTY CYCLE of alarm indicator lights.

Dot-matrix and other alphanumeric displays are not considered to be indicator lights.

Copyright International Electrotechnical Commission
Provided by IHS Markit under license with IEC
No reproduction or networking permitted without license from IHS Not for Resale, 08/26/2020 19:12:41 MDT

Table 2 – Colours ~~of indicator lights~~ and ~~their~~ meanings of indicator lights and alarm indicator lights for ME EQUIPMENT

~~Colour~~	~~Meaning~~
~~Red~~	~~Warning – immediate response by the OPERATOR is required~~
~~Yellow~~	~~Caution – prompt response by the OPERATOR is required~~
~~Green~~	~~Ready for use~~
~~Any other colour~~	~~Meaning other than that of red, yellow or green~~

Name	On when	Indicator light [a]	Alarm indicator light	Accompanied by sound	Operator requirement
Warning [b]	HAZARDOUS SITUATION is to be avoided	Red, not flashing	–	– [c]	Avoidance of a HAZARDOUS SITUATION which could cause death or serious injury
Caution [b]	HAZARDOUS SITUATION is to be avoided	Yellow, not flashing	–	–	Avoidance of a HAZARDOUS SITUATION which could cause minor or moderate injury or equipment damage
Ready for use	ME EQUIPMENT is ready for use	Green	–	–	–
HIGH PRIORITY ALARM CONDITION	Interruption of current workflow is needed	–	Red, flashing [d]	Typically [d]	Immediate action to prevent injury
MEDIUM PRIORITY ALARM CONDITION	Re-planning of current workflow is needed	–	Yellow, flashing [d]	Typically [d]	Prompt action to prevent injury
LOW PRIORITY ALARM CONDITION	Planning of future workflow is needed	–	Yellow or cyan, not flashing [d]	Optional [d]	Awareness for future action
Other	Situations other than that of red, yellow or green	Any colour other than red, yellow, cyan or green	–	–	–

[a] These indicator lights are INFORMATION SIGNALS and IEC 60601-1-8 requires that they be perceived as different than visual ALARM SIGNALS.

[b] Such warnings and cautions are frequently accompanied by a SAFETY SIGN.

[c] Sound may be utilized, but IEC 60601-1-8 requires that it be perceived as different than auditory ALARM SIGNALS.

[d] As specified in IEC 60601-1-8.

7.8.2 Colours of controls

The colour red shall be used only for a control by which a function is interrupted in case of emergency.

Compliance with the requirements of 7.8 is checked by inspection. See also 15.4.4.

7.9 ACCOMPANYING DOCUMENTS

7.9.1 * General (see also Table C.4)

ME EQUIPMENT shall be accompanied by documents containing at least the instructions for use and a technical description. The ACCOMPANYING DOCUMENTS shall be regarded as a part of the ME EQUIPMENT.

--`,,`,,`-`-`,,`,,`,`,,`---

Copyright International Electrotechnical Commission
Provided by IHS Markit under license with IEC
No reproduction or networking permitted without license from IHS
Not for Resale, 08/26/2020 19:12:41 MDT

NOTE The purpose of the ACCOMPANYING DOCUMENTS is to promote the safe use of the ME EQUIPMENT during its EXPECTED SERVICE LIFE.

The ACCOMPANYING DOCUMENTS shall identify the ME EQUIPMENT by including, as applicable, the following:

– name or trade-name of the MANUFACTURER and ~~an address~~ contact information to which the RESPONSIBLE ORGANIZATION can refer;

– MODEL OR TYPE REFERENCE (see 7.2.2).

ACCOMPANYING DOCUMENTS may be provided electronically, e.g. electronic file format on CD-ROM. If the ACCOMPANYING DOCUMENTS are provided electronically, the ~~RISK MANAGEMENT PROCESS~~ USABILITY ENGINEERING PROCESS shall include consideration of which information also needs to be provided as hard copy or as markings on the ME EQUIPMENT~~, e.g. to cover emergency operation~~ (see 12.2).

EXAMPLE Information to cover emergency operation

NOTE ACCOMPANYING DOCUMENTS provided electronically might not be acceptable in all jurisdictions.

The ACCOMPANYING DOCUMENTS shall specify any special skills, training and knowledge required of the intended OPERATOR or the RESPONSIBLE ORGANIZATION and any restrictions on locations or environments in which the ME EQUIPMENT can be used.

The ACCOMPANYING DOCUMENTS shall be written at a level consistent with the education, training and any special needs of the person(s) for whom they are intended.

Compliance is checked by inspection of the ACCOMPANYING DOCUMENTS, and, when provided electronically, as specified in IEC 60601-1-6.

7.9.2 Instructions for use (see also Table C.5)

7.9.2.1 * General

The instructions for use shall document:

– the use of the ME EQUIPMENT as intended by the MANUFACTURER,

– the frequently used functions; ~~and~~

– any known contraindication(s) to the use of the ME EQUIPMENT; and

– those parts of the ME EQUIPMENT that shall not be serviced or maintained while in use with a PATIENT.

Where the PATIENT is an intended OPERATOR, the instructions for use shall indicate:

– the PATIENT is an intended OPERATOR;

– a warning against servicing and maintenance while the ME EQUIPMENT is in use;

– which functions the PATIENT can safely use and, where applicable, which functions the PATIENT cannot safely use; and

– which maintenance the PATIENT can perform (e.g. changing batteries).

NOTE 1 For ME EQUIPMENT where the INTENDED USE includes the PATIENT partially or fully operating the ME EQUIPMENT, the PATIENT becomes an OPERATOR.

NOTE 2 For ME EQUIPMENT where the PATIENT is allowed to perform restricted maintenance, the PATIENT becomes SERVICE PERSONNEL.

The instructions for use shall indicate:

– the name or trademark and address of the MANUFACTURER;

– the MODEL OR TYPE REFERENCE.

Copyright International Electrotechnical Commission
Provided by IHS Markit under license with IEC
No reproduction or networking permitted without license from IHS
Not for Resale, 08/26/2020 19:12:41 MDT

The instructions for use shall include all applicable classifications specified in Clause 6, all markings specified in 7.2, and the explanation of ~~safety signs~~ SAFETY SIGNS and symbols (marked on the ME EQUIPMENT).

NOTE ~~1~~ 3 The instructions for use are intended for the OPERATOR and the RESPONSIBLE ORGANIZATION and should contain only the information most likely to be useful to the OPERATOR or RESPONSIBLE ORGANIZATION. Additional details can be contained in the technical description. See also 7.9.3.

NOTE ~~2~~ 4 Guidance on the preparation of instructions for use is found in IEC 62079 [25]. Guidance on the preparation of educational materials for ME EQUIPMENT is found in IEC/TR 61258 [24].

The instructions for use shall be in a language that is acceptable to the intended OPERATOR.

NOTE 5 In some countries, more than one language is required.

7.9.2.2 * Warning and safety notices

The instructions for use shall include all warning and safety notices.

NOTE General warnings and safety notices should be placed in a specifically identified section of the instructions for use. A warning or safety notice that applies only to a specific instruction or action should precede the instruction to which it applies.

For CLASS I ME EQUIPMENT, the instructions for use shall include a warning statement to the effect: “WARNING: To avoid the risk of electric shock, this equipment must only be connected to a supply mains with protective earth.”

The instructions for use shall provide the OPERATOR or RESPONSIBLE ORGANIZATION with warnings regarding any significant RISKS of reciprocal interference posed by the presence of the ME EQUIPMENT during specific investigations or treatments.

The instructions for use shall include information regarding potential electromagnetic or other interference between the ME EQUIPMENT and other devices together with advice on ways to avoid or minimize such interference.

If the ME EQUIPMENT is provided with an integral MULTIPLE SOCKET-OUTLET, the instructions for use shall provide a warning statement that connecting electrical equipment to the MSO effectively leads to creating an ME SYSTEM and the result can be a reduced level of safety. For the requirements that are applicable to an ME SYSTEM, the RESPONSIBLE ORGANIZATION shall be referred to this standard.

7.9.2.3 ME EQUIPMENT specified for connection to a separate power supply

If ME EQUIPMENT is intended for connection to a separate power supply, either the power supply shall be specified as part of the ME EQUIPMENT or the combination shall be specified as an ME SYSTEM. The instructions for use shall state this specification.

7.9.2.4 Electrical power source

For mains-operated ME EQUIPMENT with an additional power source not automatically maintained in a fully usable condition, the instructions for use shall include a warning statement referring to the necessity for periodic checking or replacement of such an additional power source.

If leakage from a battery would result in an unacceptable RISK, the instructions for use shall include a warning to remove the battery if the ME EQUIPMENT is not likely to be used for some time.

If an INTERNAL ELECTRICAL POWER SOURCE is replaceable, the instructions for use shall state its specification.

If loss of the power source would result in an unacceptable RISK, the instructions for use shall contain a warning that the ME EQUIPMENT must be connected to an appropriate power source.

EXAMPLE Internal or external battery, uninterruptible power supply (UPS) or institutional stand-by generator.

Copyright International Electrotechnical Commission
Provided by IHS Markit under license with IEC
No reproduction or networking permitted without license from IHS Not for Resale, 08/26/2020 19:12:41 MDT

7.9.2.5 ME EQUIPMENT description

The instructions for use shall include:

– a brief description of the ME EQUIPMENT;

– how the ME EQUIPMENT functions; and

– the significant physical and performance characteristics of the ME EQUIPMENT.

If applicable, this description shall include the expected positions of the OPERATOR, PATIENT and other persons near the ME EQUIPMENT in NORMAL USE (see 9.2.2.3).

The instructions for use shall include information on the materials or ingredients to which the PATIENT or OPERATOR is exposed if such exposure can constitute an unacceptable RISK (see 11.7).

The instructions for use shall specify any restrictions on other equipment or NETWORK/DATA COUPLINGS, other than those forming part of an ME SYSTEM, to which a SIGNAL INPUT/OUTPUT PART may be connected.

The instructions for use shall indicate any APPLIED PART.

7.9.2.6 * Installation

If installation of the ME EQUIPMENT or its parts is required, the instructions for use shall contain:

– a reference to where the installation instructions are to be found (e.g. the technical description), or

– contact information for persons designated by the MANUFACTURER as qualified to perform the installation.

7.9.2.7 * Isolation from the SUPPLY MAINS

If an APPLIANCE COUPLER or MAINS PLUG or other separable plug is used as the isolation means to satisfy 8.11.1 a), the instructions for use shall contain an instruction not to position the ME EQUIPMENT so that it is difficult to operate the disconnection device.

7.9.2.8 Start-up PROCEDURE

The instructions for use shall contain the necessary information for the OPERATOR to bring the ME EQUIPMENT into operation including such items as any initial control settings, connection to or positioning of the PATIENT, etc.

The instructions for use shall detail any treatment or handling needed before the ME EQUIPMENT, its parts, or ACCESSORIES can be used.

EXAMPLE A pre-use checklist.

7.9.2.9 Operating instructions

The instructions for use shall contain all information necessary to operate the ME EQUIPMENT in accordance with its specification. This shall include explanation of the functions of controls, displays and signals, the sequence of operation, and connection and disconnection of detachable parts and ACCESSORIES, and replacement of material that is consumed during operation.

The meanings of figures, symbols, warning statements, abbreviations and indicator lights on ME EQUIPMENT shall be explained in the instructions for use.

7.9.2.10 Messages

The instructions for use shall list all system messages, error messages and fault messages that are generated, unless these messages are self-explanatory.

NOTE 1 These lists can be identified in groups.

Copyright International Electrotechnical Commission
Provided by IHS Markit under license with IEC
No reproduction or networking permitted without license from IHS Not for Resale, 08/26/2020 19:12:41 MDT

The list shall include an explanation of messages including important causes, and possible action(s) by the OPERATOR, if any, that are necessary to resolve the situation indicated by the message.

NOTE 2 Requirements and guidelines for messages generated by an alarm system are found in IEC 60601-1-8.

7.9.2.11 Shutdown PROCEDURE

The instructions for use shall contain the necessary information for the OPERATOR to safely terminate the operation of the ME EQUIPMENT.

7.9.2.12 Cleaning, disinfection and sterilization

For ME EQUIPMENT parts or ACCESSORIES that can become contaminated through contact with the PATIENT or with body fluids or expired gases during NORMAL USE, the instructions for use shall contain:

– details about cleaning and disinfection or sterilization methods that may be used; and

– list the applicable parameters such as temperature, pressure, humidity, time limits and number of cycles that such ME EQUIPMENT parts or ACCESSORIES can tolerate.

See also 11.6.6 and 11.6.7.

This requirement does not apply to any material, component, ACCESSORY or ME EQUIPMENT that is marked as intended for a single use unless the MANUFACTURER specifies that the material, component, ACCESSORY or ME EQUIPMENT is to be cleaned, disinfected or sterilized before use (see 7.2.1).

7.9.2.13 Maintenance

The instructions for use shall instruct the OPERATOR or RESPONSIBLE ORGANIZATION in sufficient detail concerning preventive inspection, maintenance and calibration to be performed by them, including the frequency of such maintenance.

The instructions for use shall provide information for the safe performance of such routine maintenance necessary to ensure the continued safe use of the ME EQUIPMENT.

Additionally, the instructions for use shall identify the parts on which preventive inspection and maintenance shall be performed by SERVICE PERSONNEL, including the periods to be applied, but not necessarily including details about the actual performance of such maintenance.

For ME EQUIPMENT containing rechargeable batteries that are intended to be maintained by anyone other than SERVICE PERSONNEL, the instructions for use shall contain instructions to ensure adequate maintenance.

7.9.2.14 ACCESSORIES, supplementary equipment, used material

The instructions for use shall include a list of ACCESSORIES, detachable parts and materials that the MANUFACTURER has determined are intended for use with the ME EQUIPMENT.

If ME EQUIPMENT is intended to receive its power from other equipment in an ME SYSTEM, the instructions for use shall sufficiently specify such other equipment to ensure compliance with the requirements of this standard (e.g. part number, RATED voltage, maximum or minimum power, protection class, intermittent or continuous ~~service~~ duty).

NOTE What was referred to in the first and second editions of this standard as a “specified power supply” is considered either as another part of the same ME EQUIPMENT or as other equipment in an ME SYSTEM. Similarly, a battery charger is considered either as part of the ME EQUIPMENT or as other equipment in an ME SYSTEM.

7.9.2.15 Environmental protection

~~The instructions for use shall:~~

~~– identify any RISKS associated with the disposal of waste products, residues, etc. and of the ME EQUIPMENT and ACCESSORIES at the end of their EXPECTED SERVICE LIFE; and~~

Copyright International Electrotechnical Commission
Provided by IHS Markit under license with IEC
No reproduction or networking permitted without license from IHS
Not for Resale, 08/26/2020 19:12:41 MDT

~~– provide advice on minimizing these RISKS.~~

The instructions for use shall provide advice on the proper disposal of waste products, residues, etc. and of the ME EQUIPMENT and ACCESSORIES at the end of their EXPECTED SERVICE LIFE.

7.9.2.16 Reference to the technical description

The instructions for use shall contain the information specified in 7.9.3 or a reference to where the material specified in 7.9.3 is to be found (e.g. in a service manual).

7.9.2.17 ME EQUIPMENT emitting radiation

For ME EQUIPMENT emitting radiation for medical purposes, when appropriate, the instructions for use shall indicate the nature, type, intensity and distribution of this radiation.

7.9.2.18 ME EQUIPMENT and ACCESSORIES supplied sterile

The instructions for use for ME EQUIPMENT or ACCESSORIES supplied sterile shall indicate that they have been sterilized and indicate the method of sterilization.

The instructions for use shall indicate the necessary instructions in the event of damage to the sterile packaging, and where appropriate, details of the appropriate methods of re-sterilization (see also 7.9.2.12).

7.9.2.19 * Unique version identifier

The instructions for use shall contain a unique version identifier such as its date of issue.

EXAMPLE Month and year.

Compliance with the requirements of 7.9.2 is checked by inspection of the instructions for use in a language of an intended OPERATOR.

7.9.3 Technical description (see also Table C.6)

7.9.3.1 * General

The technical description shall provide all data that is essential for safe operation, transport and storage, and measures or conditions necessary for installing the ME EQUIPMENT, and preparing it for use. This shall include:

– the permissible environmental conditions of use including conditions for transport and storage. See also 7.2.17;

– all characteristics of the ME EQUIPMENT, including range(s), accuracy, and precision of the displayed values or an indication where they can be found;

– any special installation requirements such as the maximum permissible apparent impedance of SUPPLY MAINS;

NOTE 1 The apparent impedance of the SUPPLY MAINS is the sum of the impedance of the distribution network plus the impedance of the power source.

– if liquid is used for cooling, the permissible range of values of inlet pressure and flow, and the chemical composition of the cooling liquid;

– a description of the means of isolating the ME EQUIPMENT from the SUPPLY MAINS, if such means is not incorporated in the ME EQUIPMENT (see 8.11.1 b));

– if applicable, a description of the means for checking the oil level in partially sealed oil-filled ME EQUIPMENT or its parts (see 15.4.9);

Copyright International Electrotechnical Commission
Provided by IHS Markit under license with IEC
No reproduction or networking permitted without license from IHS
Not for Resale, 08/26/2020 19:12:41 MDT

– a warning statement that addresses the HAZARDS that can result from unauthorized modification of the ME EQUIPMENT, e.g. a statement to the effect:
  - "WARNING: No modification of this equipment is allowed."
  - "WARNING: Do not modify this equipment without authorization of the manufacturer."
  - "WARNING: If this equipment is modified, appropriate inspection and testing must be conducted to ensure continued safe use of the equipment."

– information pertaining to ESSENTIAL PERFORMANCE and any necessary recurrent ESSENTIAL PERFORMANCE and BASIC SAFETY testing including details of the means, methods and recommended frequency.

NOTE 2 This information is directly derived from the ESSENTIAL PERFORMANCE identified by the MANUFACTURER in 4.3.

If the technical description is separable from the instructions for use, it shall contain:

– all applicable classifications specified in Clause 6, any warning and safety notices and the explanation of ~~safety signs~~ SAFETY SIGNS (marked on the ME EQUIPMENT);

– a brief description of the ME EQUIPMENT, how the ME EQUIPMENT functions and its significant physical and performance characteristics; and

– a unique version identifier such as its date of issue.

NOTE ~~2~~ 3 The technical description is intended for the RESPONSIBLE ORGANIZATION and SERVICE PERSONNEL.

The MANUFACTURER may designate the minimum qualifications for SERVICE PERSONNEL. If present, these requirements shall be documented in the technical description.

NOTE ~~3~~ 4 Some authorities with jurisdiction impose additional requirements for qualification of SERVICE PERSONNEL.

7.9.3.2 Replacement of fuses, POWER SUPPLY CORDS and other parts

The technical description shall contain, as applicable, the following:

– the required type and full rating of fuses used in the SUPPLY MAINS external to PERMANENTLY INSTALLED ME EQUIPMENT, if the type and rating of these fuses are not apparent from the information concerning RATED current and mode of operation of ME EQUIPMENT;

– for ME EQUIPMENT having a non-DETACHABLE POWER SUPPLY CORD, a statement as to whether the POWER SUPPLY CORD is replaceable by SERVICE PERSONNEL, and if so, instructions for correct connection and anchoring to ensure that the requirements of 8.11.3 will continue to be met;

– instructions for correct replacement of interchangeable or detachable parts that the MANUFACTURER specifies as replaceable by SERVICE PERSONNEL; and

– where replacement of a component could result in an unacceptable RISK, appropriate warnings that identify the nature of the HAZARD and, if the MANUFACTURER specifies the component as replaceable by SERVICE PERSONNEL, all information necessary to safely replace the component.

7.9.3.3 Circuit diagrams, component part lists, etc.

The technical description shall contain a statement that the MANUFACTURER will make available on request circuit diagrams, component part lists, descriptions, calibration instructions, or other information that will assist SERVICE PERSONNEL to repair those parts of ME EQUIPMENT that are designated by the MANUFACTURER as repairable by SERVICE PERSONNEL.

7.9.3.4 * Mains isolation

The technical description shall clearly identify any means used to comply with the requirements of 8.11.1.

Compliance with the requirements of 7.9.3 is checked by inspection of the technical description.

Copyright International Electrotechnical Commission
Provided by IHS Markit under license with IEC
No reproduction or networking permitted without license from IHS
Not for Resale, 08/26/2020 19:12:41 MDT

8 * Protection against electrical HAZARDS from ME EQUIPMENT

8.1 Fundamental rule of protection against electric shock

The limits specified in 8.4 shall not be exceeded for ACCESSIBLE PARTS and APPLIED PARTS in NORMAL CONDITION or SINGLE FAULT CONDITION. For other HAZARDOUS SITUATIONS in SINGLE FAULT CONDITION, see 13.1.

a) * NORMAL CONDITION includes all of the following simultaneously:

– the presence on any SIGNAL INPUT/OUTPUT PART of any voltage or current from other electrical equipment that is permitted to be connected according to the ACCOMPANYING DOCUMENTS as specified in 7.9, or, if the ACCOMPANYING DOCUMENTS place no restrictions on such other electrical equipment, the presence of the MAXIMUM MAINS VOLTAGE as specified in 8.5.3;

– transposition of supply connections, for ME EQUIPMENT intended for connection to a SUPPLY MAINS by means of a MAINS PLUG;

– short circuit of any or all insulation that does not comply with the requirements of 8.8;

– short circuit of any or all CREEPAGE DISTANCES or AIR CLEARANCES that do not comply with the requirements of 8.9;

– open circuit of any or all earth connections that do not comply with the requirements of 8.6, including any functional earth connection.

b) * SINGLE FAULT CONDITION includes:

– short circuit of any one insulation that complies with the requirements for one MEANS OF PROTECTION as specified in 8.8;

NOTE This includes short circuiting of either constituent part of DOUBLE INSULATION that complies with 8.8.

– short circuit of any one CREEPAGE DISTANCE or AIR CLEARANCE that complies with the requirements for one MEANS OF PROTECTION as specified in 8.9;

– short circuit and open circuit of any component other than a COMPONENT WITH HIGH-INTEGRITY CHARACTERISTICS that is connected in parallel with insulation, with an AIR CLEARANCE or with a CREEPAGE DISTANCE unless shorting can be shown not to be a failure mode for the component (see also 4.8 and 4.9);

– open circuit of any one PROTECTIVE EARTH CONDUCTOR or internal PROTECTIVE EARTH CONNECTION that complies with the requirements of 8.6: this does not apply to a PROTECTIVE EARTH CONDUCTOR of PERMANENTLY INSTALLED ME EQUIPMENT, which is considered unlikely to become disconnected;

– interruption of any one supply conductor, except for the neutral conductor of polyphase ME EQUIPMENT or PERMANENTLY INSTALLED ME EQUIPMENT;

– interruption of any one power-carrying conductor between ME EQUIPMENT parts in separate ENCLOSURES, if ~~the RISK ANALYSIS indicates that~~ this condition might cause permitted limits to be exceeded;

– unintended movement of a component~~; but only if the component is not mounted securely enough to ensure that such movement will be very unlikely to occur during the EXPECTED SERVICE LIFE of the ME EQUIPMENT, as determined by the RISK MANAGEMENT PROCESS~~ (see ~~also~~ 8.10.1);

– accidental detachment of conductors and connectors where breaking free could lead to a HAZARDOUS SITUATION. See also 8.10.2.

Determination of which parts are ACCESSIBLE PARTS is performed in accordance with 5.9.

LEAKAGE CURRENTS are measured in accordance with 8.7.

Copyright International Electrotechnical Commission
Provided by IHS Markit under license with IEC
No reproduction or networking permitted without license from IHS
Not for Resale, 08/26/2020 19:12:41 MDT

8.2 Requirements related to power sources

8.2.1 Connection to a separate power source

If ME EQUIPMENT is specified for connection to a separate power source, other than the SUPPLY MAINS, either the separate power source shall be considered as part of the ME EQUIPMENT and all relevant requirements of this standard shall apply, or the combination shall be considered as an ME SYSTEM. See also 7.2.5, 7.9.2.14, 5.5 f) and Clause 16.

NOTE What was formerly referred to, in the first and second editions of this standard, as a "specified power supply" is now considered either as another part of the same ME EQUIPMENT or as another electrical equipment in an ME SYSTEM.

Compliance is checked by inspection and by testing as specified in 5.5 f). If a particular separate power supply is specified then the relevant tests are performed with the ME EQUIPMENT connected to it. If a generic separate power supply is specified, then the specification in the ACCOMPANYING DOCUMENTS is inspected.

8.2.2 Connection to an external d.c. power source

If ME EQUIPMENT is specified for power supplied from an external d.c. power source, ~~no HAZARDOUS SITUATION, other than absence of its intended function, shall develop when a connection with the wrong polarity is made~~ then a connection with the wrong polarity shall not lead to the HAZARDOUS SITUATIONS described in 13.1. The ME EQUIPMENT, when connection is subsequently made with the correct polarity, shall ~~provide freedom from unacceptable RISK~~ maintain BASIC SAFETY and ESSENTIAL PERFORMANCE.

Protective devices that can be reset by anyone without the use of a TOOL are acceptable provided ~~that these restore correct operation~~ the ME EQUIPMENT returns to NORMAL CONDITION on reset.

NOTE 1 See also 11.8.

NOTE 2 The external d.c. power source can be a SUPPLY MAINS or another item of electrical equipment. In the latter case, the combination is considered to be an ME SYSTEM as specified in 8.2.1.

~~*Compliance is checked by inspection and, if necessary, by functional tests.*~~

8.3 Classification of APPLIED PARTS

a) * An APPLIED PART that is specified in the ACCOMPANYING DOCUMENTS as suitable for DIRECT CARDIAC APPLICATION shall be a TYPE CF APPLIED PART.

NOTE See the rationale for the definition of DIRECT CARDIAC APPLICATION (3.22) concerning the APPLIED PARTS that need to be TYPE CF APPLIED PARTS. Other restrictions can apply for cardiac applications.

Compliance is checked by inspection.

b) * An APPLIED PART that includes a PATIENT CONNECTION that is intended to deliver electrical energy or an electrophysiological signal to or from the PATIENT shall be a TYPE BF APPLIED PART or TYPE CF APPLIED PART.

Compliance is checked by inspection.

c) An APPLIED PART not covered by a) or b) shall be a TYPE B APPLIED PART, TYPE BF APPLIED PART or TYPE CF APPLIED PART.

Compliance is checked by inspection.

~~d) * For a part that is identified according to 4.6 as needing to be subject to the requirements for an APPLIED PART (except for marking), the requirements for a TYPE B APPLIED PART shall apply unless the RISK MANAGEMENT PROCESS identifies a need for the requirements for a TYPE BF APPLIED PART or TYPE CF APPLIED PART to apply.~~

Copyright International Electrotechnical Commission
Provided by IHS Markit under license with IEC
No reproduction or networking permitted without license from IHS Not for Resale, 08/26/2020 19:12:41 MDT

8.4 Limitation of voltage, current or energy

8.4.1 * PATIENT CONNECTIONS intended to deliver current

The limits specified in 8.4.2 do not apply to currents that are intended to flow through the body of the PATIENT to produce a physiological effect during NORMAL USE.

8.4.2 ACCESSIBLE PARTS ~~including~~ and APPLIED PARTS

a) The currents from, to or between PATIENT CONNECTIONS shall not exceed the limits for PATIENT LEAKAGE CURRENT and PATIENT AUXILIARY CURRENT specified in Table 3 and Table 4 when measured as specified in 8.7.4.

Compliance is checked by measurement according to 8.7.4.

b) * The LEAKAGE CURRENTS from, to or between ACCESSIBLE PARTS ~~other than PATIENT CONNECTIONS~~ shall not exceed the limits for TOUCH CURRENT specified in 8.7.3 c) when measured as specified in 8.7.4.

Compliance is checked by measurement according to 8.7.4.

c) * The limits specified in b) above do not apply to the following parts if the probability of a connection to a PATIENT, either directly or through the body of the OPERATOR, through which a current exceeding the allowable TOUCH CURRENT could flow, is negligible in NORMAL USE, and the instructions for use instruct the OPERATOR not to touch the relevant part and the PATIENT simultaneously:

- accessible contacts of connectors;
- contacts of fuseholders that are accessible during replacement of the fuse;
- contacts of lampholders that are accessible after removal of the lamp;
- parts inside an ACCESS COVER that can be opened without the use of a TOOL, or where a TOOL is needed but the instructions for use instruct any OPERATOR other than SERVICE PERSONNEL to open the relevant ACCESS COVER.

EXAMPLE 1 Illuminated push-buttons

EXAMPLE 2 Indicator lamps

EXAMPLE 3 Recorder pens

EXAMPLE 4 Parts of plug-in modules

EXAMPLE 5 Batteries

For such parts, the voltage to earth or to other ACCESSIBLE PARTS shall not exceed 42,4 V peak a.c. or 60 V d.c. in NORMAL CONDITION or in SINGLE FAULT CONDITION. The d.c. limit of 60 V applies to d.c. with not more than 10 % peak-to-peak ripple. If the ripple exceeds that amount, the 42,4 V peak limit applies. The energy shall not exceed 240 VA for longer than 60 s or the stored energy available shall not exceed 20 J at a potential ~~up to 2 V~~ of 2 V or more.

NOTE 1 If voltages higher than the limits specified in 8.4.2 c) are present, the LEAKAGE CURRENT limits referred to in 8.4.2 b) apply.

Compliance is checked by inspection of ~~the RISK MANAGEMENT FILE, by reference to~~ the instructions for use and by measurement.

If the ME EQUIPMENT has SIP/SOP connectors or separate power supply output connectors, measure the voltage of all conductive ACCESSIBLE PARTS of the SIP/SOP connectors or power output connectors to earth:

- *Connect a resistor of 10 kΩ ± 500 Ω (8 W for measurements up to 280 V r.m.s.) between the SIP/SOP-pin (or other output connector) to earth.*
- *Connect in parallel to the 10 kΩ resistor a peak voltmeter or an oscilloscope to measure the voltage.*

Copyright International Electrotechnical Commission
Provided by IHS Markit under license with IEC
No reproduction or networking permitted without license from IHS
Not for Resale, 08/26/2020 19:12:41 MDT

If the voltage measured above is less than or equal to 60 V d.c. or 42,4 V peak a.c., a subsequent LEAKAGE CURRENT test is not necessary.

NOTE 2 A similar approach exists in IEC 60950-1:2005, 1.4.9.

NOTE 3 10 kΩ has been selected, because it is a value higher than the body impedance of the OPERATOR (= 1 kΩ) and lower than the expected impedance of the insulation barrier (approximately 1 MΩ). Furthermore, IEC 60950-1:2005, 1.4.9 used a 5 kΩ resistor and therefore using a 10 kΩ resistor provides greater safety.

If the voltage measurement above exceeds the specified levels, then the TOUCH CURRENT from SIP/SOP connectors to earth and from any separate power supply output connectors to earth shall be measured.

Measure the TOUCH CURRENT derived from the SUPPLY MAINS by applying the limits in 8.7.3 c) from the connectors described above in:

– *NORMAL CONDITION including open FUNCTIONAL EARTH CONDUCTOR (if applicable); and*

– *SINGLE FAULT CONDITION (respectively open neutral conductor; open PROTECTIVE EARTH CONDUCTOR (if applicable)).*

NOTE 4 If the SIP/SOP circuit is completely isolated from the floating (non-earth referenced) SECONDARY CIRCUIT by an own insulation barrier of at least 1 MOOP based on MAINS VOLTAGE, i.e. a SEPARATION DEVICE according to 16.5, the measurement of the SIP/SOP connector to earth TOUCH CURRENT does not need to be conducted. In such cases it is sufficient to evaluate the effectiveness of the SEPARATION DEVICE by measurement according to 8.7.4.7 c).

NOTE 5 For CLASS I ME EQUIPMENT with earth referenced SECONDARY CIRCUITS in NORMAL CONDITION, the LEAKAGE CURRENT derived from the SUPPLY MAINS will be superimposed by the secondary voltage generated current. However, the SUPPLY MAINS derived LEAKAGE CURRENT will usually be equal to the TOUCH CURRENT measured on parts connected to the PROTECTIVE EARTH TERMINAL both in NORMAL CONDITION and in SINGLE FAULT CONDITION (open neutral conductor; open PROTECTIVE EARTH CONDUCTOR). If in doubt, the measurement can usually be done by setting the voltage meter to AC-measurement only or by using an oscilloscope or any other equivalent method to assure that the secondary voltage will not influence the measurement result.

d) * The voltage and energy limits specified in c) above also apply to:

– internal parts, other than contacts of plugs, connectors and socket-outlets, that can be touched by the test pin shown in Figure 8 inserted through an opening in an ENCLOSURE; and

– internal parts that can be touched by a metal test rod with a diameter of $4\ ^{0}_{-0,05}$ mm and a length of $100\ ^{+0,5}_{0}$ mm, inserted through any opening in the top of an ENCLOSURE or through any opening provided for the adjustment of pre-set controls that ~~may~~ can be adjusted by the RESPONSIBLE ORGANIZATION in NORMAL USE by using a TOOL.

See also 8.9.4 concerning the measurement of CREEPAGE DISTANCES and AIR CLEARANCES through slots or openings in external parts to the standard test finger.

Compliance is checked by inserting the test pin or the test rod through relevant openings. The test pin is inserted in every possible position with minimal force (not more than 1 N).

The test rod is inserted in every possible position through openings provided for the adjustment of pre-set controls that can be adjusted by the RESPONSIBLE ORGANIZATION in NORMAL USE, in case of doubt with a force of 10 N.

If the instructions for use specify that a particular TOOL is to be used, the test is repeated with that TOOL.

The test rod is also freely and vertically suspended through any opening in the top of an ENCLOSURE.

Copyright International Electrotechnical Commission
Provided by IHS Markit under license with IEC
No reproduction or networking permitted without license from IHS
Not for Resale, 08/26/2020 19:12:41 MDT

Dimensions in millimetres

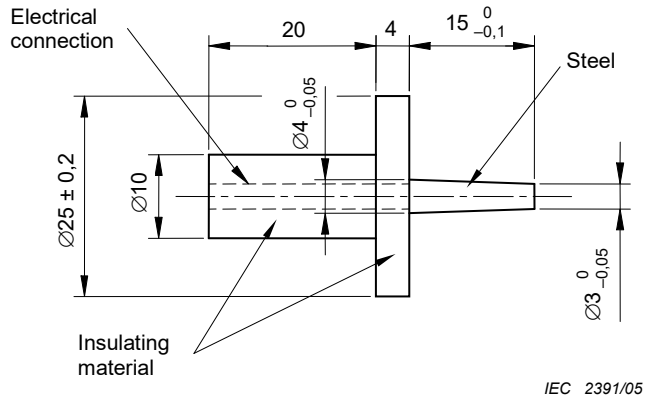

Figure 8 – Test pin
(see 8.4.2 d)

e) Where an ACCESS COVER that can be opened without the use of a TOOL gives access to parts that are at voltages above the levels permitted by this subclause, but these parts are automatically de-energized when the ACCESS COVER is opened, the device(s) used to de-energize the parts shall meet the requirements specified in 8.11.1 for mains isolating switches and shall remain effective in SINGLE FAULT CONDITION. If it is possible to prevent these devices from operating, a TOOL shall be required.

Compliance is checked by inspection.

8.4.3 * ME EQUIPMENT intended to be connected to a power source by a plug

ME EQUIPMENT or its parts intended to be connected to a power source by means of a plug shall be so designed that 1 s after disconnection of the plug the voltage between the pins of the plug and between either supply pin and the ENCLOSURE does not exceed 60 V or, if this value is exceeded, the stored charge does not exceed 45 μC.

Compliance is checked by the following test:

ME EQUIPMENT is operated at RATED voltage or at the upper limit of the RATED voltage range.

ME EQUIPMENT is disconnected from the power source with any relevant switch in the "On" and "Off" positions.

Either the ME EQUIPMENT is disconnected from the power source by means of the plug, in which case the test is performed as many times as necessary to allow the worst case to be measured, or a triggering circuit is used to ensure that disconnection occurs at the peak of the supply voltage waveform.

The voltage between the pins of the plug and between any pin and the ENCLOSURE is measured 1 s after disconnection with an instrument the internal impedance of which does not affect the test significantly.

NOTE An example of a measuring arrangement that is considered acceptable is an oscilloscope and probe having an input impedance consisting of a resistance of 100 MΩ ± 5 MΩ in parallel with an input capacitance of 20 pF ± 5 pF.

The stored charge can be measured or calculated by any convenient method.

Where appropriate, a d.c. input voltage equal to the peak of the RATED SUPPLY MAINS voltage may be used.

Copyright International Electrotechnical Commission
Provided by IHS Markit under license with IEC
No reproduction or networking permitted without license from IHS
Not for Resale, 08/26/2020 19:12:41 MDT

8.4.4 * Internal capacitive circuits

Conductive parts of capacitive circuits that become accessible after ME EQUIPMENT has been de-energized and ACCESS COVERS as present in NORMAL USE have been removed immediately thereafter, shall not have a residual voltage exceeding 60 V, or, if this value is exceeded, shall not have a stored charge exceeding 45 μC.

If automatic discharging is not reasonably possible and ACCESS COVERS can be removed only with the aid of a TOOL, a device that is included and which permits manual discharging is acceptable. The capacitor(s) or the connected circuitry shall then be marked with symbol IEC 60417-5036 (~~DB:~~2002-10) (see Table D.1, symbol 24) and the non-automatic discharging device shall be specified in the technical description.

Compliance is checked by the following test:

ME EQUIPMENT is operated at RATED voltage and then de-energized. Any ACCESS COVERS present in NORMAL USE are removed as quickly as normally possible. Immediately thereafter, the residual voltage on any accessible capacitors or circuit parts is measured and the stored charge calculated.

If a non-automatic discharging device is specified in the technical description, its inclusion and marking are ascertained by inspection.

8.5 Separation of parts

8.5.1 * MEANS OF PROTECTION (MOP)

8.5.1.1 General

ME EQUIPMENT shall have two MEANS OF PROTECTION to prevent APPLIED PARTS and other ACCESSIBLE PARTS from exceeding the limits specified in 8.4.

~~Each MEANS OF PROTECTION shall be categorized as a MEANS OF PATIENT PROTECTION or a MEANS OF OPERATOR PROTECTION, taking account of 4.6. See also Figure A.12.~~

Each MEANS OF PROTECTION shall be categorized in relation to the ME EQUIPMENT part(s) which it protects from exceeding permitted limits. It is a MEANS OF PATIENT PROTECTION if it protects APPLIED PARTS or parts that are identified according to 4.6 as needing to be subject to the same requirements as APPLIED PARTS. Otherwise the requirements for either MOPP or MOOP shall be used as shown in Figure 40.

Varnishing, enamelling, oxidation and similar protective finishes, as well as covering with sealing compounds that can replasticize at temperatures to be expected during operation (including sterilization), shall not be regarded as a MEANS OF PROTECTION.

NOTE Coatings and other insulation that are intended as a MEANS OF PROTECTION and that comply with IEC 60950-1:~~2001~~2005 or IEC 62368-1:2018 ~~are acceptable~~ can be used as a MEANS OF OPERATOR PROTECTION but not automatically as a MEANS OF PATIENT PROTECTION. For MEANS OF PATIENT PROTECTION, considerations can arise as a result of the RISK MANAGEMENT PROCESS.

Components and wiring forming a MEANS OF PROTECTION shall comply with the relevant requirements of 8.10.

Any insulation, CREEPAGE DISTANCE, AIR CLEARANCES, component or earth connection that does not comply with the requirements of 8.5.1.2 and 8.5.1.3 shall not be considered as a MEANS OF PROTECTION. Failure of any or all such parts shall be regarded as NORMAL CONDITION.

Compliance is checked by the test in 8.5.1.3.

Copyright International Electrotechnical Commission
Provided by IHS Markit under license with IEC
No reproduction or networking permitted without license from IHS
Not for Resale, 08/26/2020 19:12:41 MDT

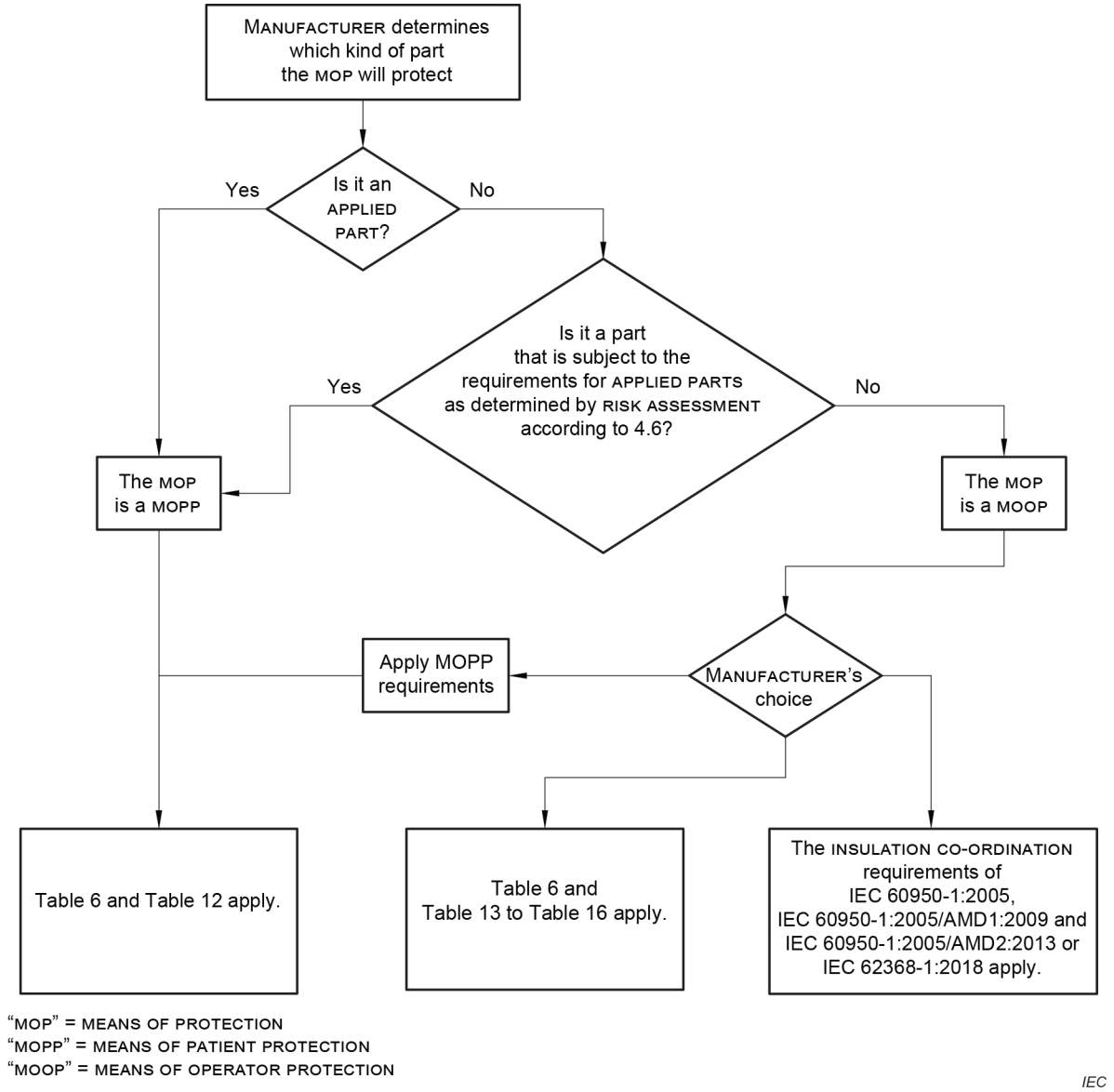

Figure 40 – Identification of MEANS OF PATIENT PROTECTION and MEANS OF OPERATOR PROTECTION

8.5.1.2 * MEANS OF PATIENT PROTECTION (MOPP)

Solid insulation forming a MEANS OF PATIENT PROTECTION shall comply with the dielectric strength test according to 8.8 at the test voltage specified in Table 6.

CREEPAGE DISTANCES and AIR CLEARANCES forming a MEANS OF PATIENT PROTECTION shall comply with the limits specified in Table 12.

NOTE 1 Barriers providing 2 MOOP with AIR CLEARANCE values according to Table 13 to Table 15 (inclusive) or according to IEC 60950-1:2005, IEC 60950-1:2005/AMD1:2009 and IEC 60950-1:2005/AMD2:2013 meet the requirements for 1 MOPP according to Table 12 for WORKING VOLTAGES up to 707 V d.c. / 500 V r.m.s. At higher WORKING VOLTAGES, 2 MOOP does not necessarily provide 1 MOPP.

Barriers providing REINFORCED INSULATION (2 MOOP) with AIR CLEARANCE values according to IEC 62368-1:2018 for WORKING VOLTAGES up to and including 354 V d.c. / 250 V r.m.s. meets the requirements for 1 MOPP according to Table 12. At higher WORKING VOLTAGES, REINFORCED INSULATION (2 MOOP) does not necessarily provide 1 MOPP.

See also 8.5.1.3.

NOTE 2 Barriers providing REINFORCED INSULATION (2 MOOP) with CREEPAGE DISTANCES according to IEC 62368-1:2018, Table 17 and Table 18 or IEC 60950-1:2005, IEC 60950-1:2005/AMD1:2009, IEC 60950-1:2005/AMD2:2013, Table 2N meet the requirements for 1 MOPP according to Table 12.

Copyright International Electrotechnical Commission
Provided by IHS Markit under license with IEC
No reproduction or networking permitted without license from IHS
Not for Resale, 08/26/2020 19:12:41 MDT

PROTECTIVE EARTH CONNECTIONS forming a MEANS OF PATIENT PROTECTION shall comply with the requirements and tests of 8.6.

~~A Y1 capacitor complying with IEC 60384-14 is considered equivalent to one MEANS OF PATIENT PROTECTION provided that it will pass the dielectric strength test for two MEANS OF PATIENT PROTECTION. Where two capacitors are used in series, they shall each be RATED for the total WORKING VOLTAGE across the pair and shall have the same NOMINAL capacitance.~~

A Y capacitor (Y1 or Y2 only) complying with IEC 60384-14 is considered equivalent to one MEANS OF PATIENT PROTECTION. Where two capacitors are used in series, they shall be identical in type (either both Y1 or both Y2) and shall have the same NOMINAL capacitance. The capacitor(s) shall meet the dielectric strength for the type of protection for which they are being used (i.e. one or two MEANS OF PATIENT PROTECTION).

Where the working voltage across a barrier forming a MEANS OF PATIENT PROTECTION is less than 42,4 V peak a.c. or 60 V d.c., a single Y1 capacitor is acceptable for two MEANS OF PATIENT PROTECTION.

NOTE 3 When fitting Y capacitors across barriers, the dielectric strength requirement is to be considered. For example, for voltages in the range of 212 V peak to 354 V peak, two MEANS OF PATIENT PROTECTION are tested at 4 000 V a.c.; therefore, Y1 capacitors are used. Two Y2 capacitors in series would not withstand this voltage as they are rated at 1 500 V a.c. each. For voltages below 212 V peak, two Y2 capacitors would suffice as the dielectric strength requirement is 3 000 V a.c.

Opto-couplers complying with IEC 60747-5-5:2007, or a later edition, are considered equivalent to the requirements of 8.8.2 and 8.9.3.

All of the following apply:

– AIR CLEARANCE at the outside of the opto-coupler;
– CREEPAGE DISTANCE at the outside of the opto-coupler; and
– dielectric strength across the opto-coupler.

NOTE 4 The factor of 1,6 on insulation test voltage is only used for thermal cycling tests (8.9.3), as also in other safety standards (e.g. IEC 62368-1, IEC 60950-1). IEC 60747-5-5 applies different test methods. Because compliance with IEC 60747-5-5 is regarded as equivalent to the thermal cycling test, the 1,6 factor is not required. This is the same approach used in IEC 62368-1:2018, 5.4.4.4.

NOTE 5 Distance through insulation (0,4 mm) and thermal cycling testing are not required because compliance with the component standards addresses the RISK of pin holes and thermal effects on the insulating compound.

Compliance is checked by the test in 8.5.1.3.

8.5.1.3 MEANS OF OPERATOR PROTECTION (MOOP)

Solid insulation forming a MEANS OF OPERATOR PROTECTION shall:

– comply with the dielectric strength test according to 8.8 at the test voltage specified in Table 6; or
– comply with the requirements of IEC 60950-1:2005, IEC 60950-1:2005/AMD1:2009 and IEC 60950-1:2005/AMD2:2013 for INSULATION CO-ORDINATION; or
– comply with the requirements of IEC 62368-1:2018 for INSULATION CO-ORDINATION.

CREEPAGE DISTANCES and AIR CLEARANCES forming a MEANS OF OPERATOR PROTECTION shall:

– comply with the limits specified in Table 13 to Table 16 (inclusive); or
– comply with the requirements of IEC 60950-1:2005, IEC 60950-1:2005/AMD1:2009 and IEC 60950-1:2005/AMD2:2013 for INSULATION CO-ORDINATION; or
– comply with the requirements of IEC 62368-1:2018 for INSULATION CO-ORDINATION.

PROTECTIVE EARTH CONNECTIONS forming a MEANS OF OPERATOR PROTECTION shall either:

– comply with the requirements of 8.6; or

Copyright International Electrotechnical Commission
Provided by IHS Markit under license with IEC
No reproduction or networking permitted without license from IHS
Not for Resale, 08/26/2020 19:12:41 MDT

– comply with the requirements and tests of IEC 60950-1:2005, IEC 60950-1:2005/AMD1:2009 and IEC 60950-1:2005/AMD2:2013 for protective earthing; or

– comply with the requirements of IEC 62368-1:2018 for protective earthing.

~~A Y2 capacitor complying with IEC 60384-14 is considered equivalent to one MEANS OF OPERATOR PROTECTION provided that it will pass the dielectric strength test for one MEANS OF OPERATOR PROTECTION. A Y1 capacitor complying with IEC 60384-14 is considered equivalent to two MEANS OF OPERATOR PROTECTION provided that it will pass the dielectric strength test for two MEANS OF OPERATOR PROTECTION. Where two capacitors are used in series, they shall each be RATED for the total WORKING VOLTAGE across the pair and shall have the same NOMINAL capacitance.~~

A Y capacitor (Y1 or Y2 only) complying with IEC 60384-14 is considered equivalent to one MEANS OF OPERATOR PROTECTION. Where two capacitors are used in series, they shall be identical in type (either both Y1 or both Y2) and shall have the same NOMINAL capacitance. The capacitor(s) shall meet the dielectric strength for the type of protection for which they are being used (i.e. one or two MEANS OF OPERATOR PROTECTION). A Y1 capacitor can be used for two MEANS OF OPERATOR PROTECTION.

Opto-couplers complying with IEC 60747-5-5:2007, or a later edition, are considered equivalent to the requirements of 8.8.2 for distances through solid insulation and 8.9.3 for spaces filled by insulating compound.

The following apply:

– AIR CLEARANCE at the outside of the opto-coupler;

– CREEPAGE DISTANCE at the outside of the opto-coupler; and

– dielectric strength across the opto-coupler.

NOTE 1 The factor of 1,6 on insulation test voltage is only used for thermal cycling tests (8.9.3), as also in other safety standards (e.g. IEC 62368-1, IEC 60950-1). IEC 60747-5-5 applies different test methods. Because compliance with IEC 60747-5-5 is regarded as equivalent to the thermal cycling test, the 1,6 factor is not required. This is the same approach used in IEC 62368-1:2018, 5.4.4.4.

NOTE 2 Distance through insulation (0,4 mm) and thermal cycling testing are not required because compliance with the component standards addresses the RISK of pin holes and thermal effects on the insulating compound.

Compliance ~~with 8.5.1.1 to 8.5.1.3 (inclusive)~~ is checked by examination of the physical and electrical configuration of the ME EQUIPMENT to identify points at which insulation, CREEPAGE DISTANCES, AIR CLEARANCES, impedances of components or PROTECTIVE EARTH CONNECTIONS prevent ACCESSIBLE PARTS or APPLIED PARTS from exceeding the limits specified in 8.4.

NOTE 3 Such points typically include insulation between parts different from earth potential and ACCESSIBLE PARTS or APPLIED PARTS but can also include, for example, insulation between a floating circuit and earth or other circuits. A survey of insulation paths is found in Annex J.

For each such point, it is determined whether:

– *solid insulation complies with the dielectric strength test according to 8.8 or, for a MEANS OF OPERATOR PROTECTION, with the requirements of IEC 60950-1:2005, IEC 60950-1:2005/AMD1:2009 and IEC 60950-1:2005/AMD2:2013 or IEC 62368-1:2018 for INSULATION CO-ORDINATION;*

– *CREEPAGE DISTANCES and AIR CLEARANCES are as specified in 8.9 or, for a MEANS OF OPERATOR PROTECTION, with the requirements of IEC 60950-1:2005, IEC 60950-1:2005/AMD1:2009 and IEC 60950-1:2005/AMD2:2013 or IEC 62368-1:2018 for INSULATION CO-ORDINATION;*

– *components that are connected in parallel with an insulation, with an AIR CLEARANCE or with a CREEPAGE DISTANCE comply with 4.8 and 8.10.1;*

– *PROTECTIVE EARTH CONNECTIONS comply with the requirements of 8.6 or, for a MEANS OF OPERATOR PROTECTION, with the requirements of IEC 60950-1:2005, IEC 60950-1:2005/AMD1:2009 and IEC 60950-1:2005/AMD2:2013 or IEC 62368-1:2018 for protective earthing;*

--`,,`,,`-`-`,,`,,`,`,,`---
Copyright International Electrotechnical Commission
Provided by IHS Markit under license with IEC
No reproduction or networking permitted without license from IHS
Not for Resale, 08/26/2020 19:12:41 MDT

and hence whether a failure at that point is to be regarded as a NORMAL CONDITION or as a SINGLE FAULT CONDITION.

~~*Each MEANS OF PROTECTION is categorized in relation to the ME EQUIPMENT part(s) which it protects from exceeding permitted limits. It is a MEANS OF PATIENT PROTECTION if it protects APPLIED PARTS or parts that are identified according to 4.6 as needing to be subject to the same requirements as APPLIED PARTS. Otherwise it is a MEANS OF OPERATOR PROTECTION.*~~

The WORKING VOLTAGE is determined by inspection, calculation or measurement, according to 8.5.4.

The voltage, current or energy that can appear between any ACCESSIBLE PART or APPLIED PART and any other ACCESSIBLE PART, APPLIED PART or earth in NORMAL CONDITION and in SINGLE FAULT CONDITION is determined by inspection or calculation or, where necessary, by measurement in the relevant conditions.

8.5.2 Separation of PATIENT CONNECTIONS

8.5.2.1 * F-TYPE APPLIED PARTS

The PATIENT CONNECTION(S) of any F-TYPE APPLIED PART shall be separated from all other parts, including the PATIENT CONNECTION(S) of other APPLIED PARTS, by means equivalent to one MEANS OF PATIENT PROTECTION for a WORKING VOLTAGE equal to the MAXIMUM MAINS VOLTAGE and shall comply with the specified limit for PATIENT LEAKAGE CURRENT with 110 % of the MAXIMUM MAINS VOLTAGE applied.

A single F-TYPE APPLIED PART may include multiple functions, in which case separation between such functions is not required.

If there is no electrical separation between PATIENT CONNECTION(S) of the same or another function (e.g. between ECG electrode and pressure catheter), then these PATIENT CONNECTION(S) are treated as one APPLIED PART.

Whether multiple functions are to be considered as all within one APPLIED PART or as multiple APPLIED PARTS is as defined by the MANUFACTURER.

The classification as TYPE BF, TYPE CF or DEFIBRILLATION-PROOF applies to the whole of one APPLIED PART.

Compliance is checked by inspection, by the LEAKAGE CURRENT tests of 8.7.4, by the dielectric strength test of 8.8.3 and by measurement of relevant CREEPAGE DISTANCES and AIR CLEARANCES.

NOTE The separation means between an F-TYPE APPLIED PART and other parts are subject both to these tests, related to the MAXIMUM MAINS VOLTAGE, and to tests related to the voltages present within the respective circuits as specified in 8.5.4. Depending on the magnitude of the latter voltages, one set of tests or the other could be more stringent.

Any protective device connected between PATIENT CONNECTIONS of an F-TYPE APPLIED PART and the ENCLOSURE for the purpose of providing protection against excessive voltages shall not operate below 500 V r.m.s.

Compliance is checked by testing the operating voltage of the protective device.

8.5.2.2 * TYPE B APPLIED PARTS

The PATIENT CONNECTION(S) of a TYPE B APPLIED PART that is not PROTECTIVELY EARTHED shall be separated by one MEANS OF PATIENT PROTECTION from metal ACCESSIBLE PARTS that are not PROTECTIVELY EARTHED, unless:

– the metal ACCESSIBLE PART is physically contiguous with the APPLIED PART and can be regarded as a part of the APPLIED PART; and

– the RISK that the metal ACCESSIBLE PART will make contact with a source of voltage or LEAKAGE CURRENT above permitted limits is acceptably low. In this case, the test in 8.7.4.7 d) does not apply.

Copyright International Electrotechnical Commission
Provided by IHS Markit under license with IEC
No reproduction or networking permitted without license from IHS
Not for Resale, 08/26/2020 19:12:41 MDT

Compliance is checked by inspection, by the LEAKAGE CURRENT tests of 8.7.4, by the dielectric strength test of 8.8.3, by measurement of relevant CREEPAGE DISTANCES and AIR CLEARANCES, and by reference to the RISK MANAGEMENT FILE.

8.5.2.3 * PATIENT leads or PATIENT cables

Any connector for electrical connections on a PATIENT lead that:

– is at the end of the lead or cable that is ~~remote~~ distal from the PATIENT; and

– contains a conductive part that is not separated from all PATIENT CONNECTION(S) by one MEANS OF PATIENT PROTECTION for a WORKING VOLTAGE equal to the MAXIMUM MAINS VOLTAGE.

shall be constructed so that the said part cannot become connected to earth or possible hazardous voltage while the PATIENT CONNECTION(S) contact the PATIENT.

NOTE Where the phrase "said part" is mentioned in this subclause, it refers to the "...conductive part of the connector that is not separated from all PATIENT CONNECTIONS...." from the first sentence of this subclause.

In particular:

– the said part shall not come into contact with a flat conductive plate of not less than 100 mm diameter;

– the AIR CLEARANCE between connector pins and a flat surface shall be at least 0,5 mm;

– if able to be plugged into a mains socket, the said part shall be protected from making contact with parts at MAINS VOLTAGE by insulating means providing a CREEPAGE DISTANCE of at least 1,0 mm and a dielectric strength of 1 500 V and complying with 8.8.4.1;

– the straight unjointed test finger with the same dimensions as the standard test finger of Figure 6 shall not make electrical contact with the said part if applied in the least favourable position against the access openings with a force of 10 N, unless the RISK MANAGEMENT PROCESS demonstrates that no unacceptable RISK exists from contact with objects other than a mains socket or a flat surface (e.g. corners or edges).

Compliance is checked by inspection and test as required.

8.5.3 * MAXIMUM MAINS VOLTAGE

The MAXIMUM MAINS VOLTAGE shall be determined as follows:

– for single-phase or d.c. SUPPLY MAINS powered ME EQUIPMENT, including INTERNALLY POWERED ME EQUIPMENT that also has a means of connection to a SUPPLY MAINS, the MAXIMUM MAINS VOLTAGE is the highest RATED supply voltage; unless ~~this~~ the highest RATED supply voltage is less than 100 V, in which case the MAXIMUM MAINS VOLTAGE is ~~250~~ 240 V;

– for polyphase ME EQUIPMENT, the MAXIMUM MAINS VOLTAGE is the highest RATED phase to neutral supply voltage;

– for other INTERNALLY POWERED ME EQUIPMENT, the MAXIMUM MAINS VOLTAGE is ~~250~~ 240 V.

8.5.4 * WORKING VOLTAGE

The WORKING VOLTAGE for each MEANS OF PROTECTION shall be determined as follows:

– For WORKING VOLTAGE measurement, all circuits shall be connected to earth with the exception of floating parts providing at least one MEANS OF PROTECTION to earth in which case the highest measured voltage on either side of the barrier is the WORKING VOLTAGE (see Figure 41).

--`,,`,,`-`-`,,`,,`,`,,`---

Copyright International Electrotechnical Commission
Provided by IHS Markit under license with IEC
No reproduction or networking permitted without license from IHS Not for Resale, 08/26/2020 19:12:41 MDT

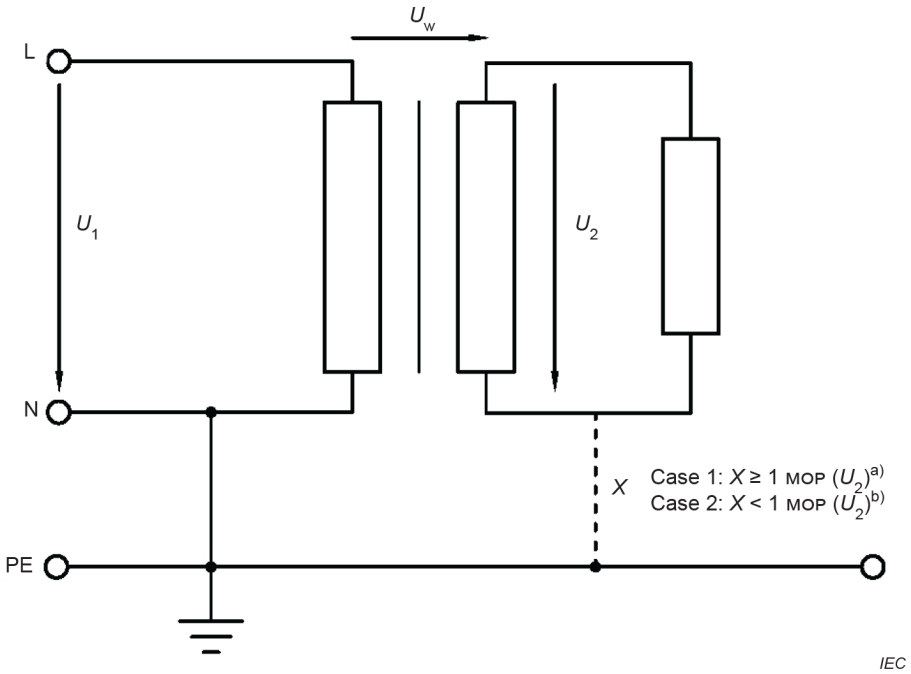

a) For Case 1, the floating circuit is isolated from earth by 1 MOP based on the floating circuit voltage U_2. The WORKING VOLTAGE (U_w) of the mains barrier is the highest voltage of one side of the barrier, i.e. U_1 or U_2 whichever is greater in magnitude.

b) For Case 2, the floating circuit is not isolated by at least 1 MOP to earth based on the floating circuit voltage U_2. For the measurement of the WORKING VOLTAGE (U_w) of the mains barrier both sides have to be earthed to obtain repeatable worst-case results.

Figure 41 – WORKING VOLTAGE measurement

– The input supply voltage to the ME EQUIPMENT shall be the RATED voltage or the voltage within the RATED voltage range which results in the highest measured value.

– For d.c. voltages with superimposed ripple, the WORKING VOLTAGE is the average value if the peak-to-peak ripple does not exceed 10 % of the average value or the peak voltage if the peak-to-peak ripple exceeds 10 % of the average value.

– The WORKING VOLTAGE for each MEANS OF PROTECTION forming DOUBLE INSULATION is the voltage to which the DOUBLE INSULATION as a whole is subjected.

– For WORKING VOLTAGE involving a PATIENT CONNECTION not connected to earth, the situation in which the PATIENT is earthed (intentionally or accidentally) is regarded as a NORMAL CONDITION.

– The WORKING VOLTAGE between the PATIENT CONNECTION(S) of an F-TYPE APPLIED PART and the ENCLOSURE is taken as the highest voltage appearing across the insulation in NORMAL USE including earthing of any part of the APPLIED PART. See also 8.5.2.1.

– For DEFIBRILLATION-PROOF APPLIED PARTS, the WORKING VOLTAGE is determined without regard to the possible presence of defibrillation voltages. See also 8.5.5 and 8.9.1.15.

– In the case of motors provided with capacitors where a resonance voltage can occur between the point where a winding and a capacitor are connected together on the one hand and any terminal for external conductors on the other hand, the WORKING VOLTAGE shall be equal to the resonance voltage.

8.5.5 DEFIBRILLATION-PROOF APPLIED PARTS

8.5.5.1 * Defibrillation protection

The classification DEFIBRILLATION-PROOF APPLIED PART shall apply to the whole of one APPLIED PART.

Copyright International Electrotechnical Commission
Provided by IHS Markit under license with IEC
No reproduction or networking permitted without license from IHS
Not for Resale, 08/26/2020 19:12:41 MDT

~~NOTE 1 This requirement does not apply to separate functions of the same APPLIED PART but the possibility of an OPERATOR receiving a shock from such parts should be considered in the RISK MANAGEMENT PROCESS.~~

See 8.9.1.15 for the requirements for CREEPAGE DISTANCES and AIR CLEARANCES associated with a DEFIBRILLATION-PROOF APPLIED PART.

Arrangements used to isolate the PATIENT CONNECTION(S) of a DEFIBRILLATION-PROOF APPLIED PART from other parts of ME EQUIPMENT shall be so designed that:

a) During a discharge of a cardiac defibrillator to a PATIENT connected to a DEFIBRILLATION-PROOF APPLIED PART, hazardous electrical energies, as determined by the peak voltage measured between the points Y_1 and Y_2 of Figure 9 and Figure 10 exceeding 1 V, do not appear on:

   – the ENCLOSURE, including connectors in PATIENT leads and cables when connected to the ME EQUIPMENT;

     NOTE ~~2~~ 1 This requirement does not apply to a connecting lead from a DEFIBRILLATION-PROOF APPLIED PART or its connector when it is disconnected from the ME EQUIPMENT.

   – any SIGNAL INPUT/OUTPUT PART;

   – metal foil for test on which the ME EQUIPMENT is placed and which has an area at least equal to the base of the ME EQUIPMENT; ~~or~~

   – PATIENT CONNECTIONS of any other APPLIED PART (whether or not classified as a DEFIBRILLATION-PROOF APPLIED PART); or

   – any unused or disconnected connections of the APPLIED PART under test or any function of the same APPLIED PART. ME EQUIPMENT that is completely BODY-WORN (e.g. a Holter monitor) is exempt from this requirement.

b) Following exposure to the defibrillation voltage, and any necessary recovery time stated in the ACCOMPANYING DOCUMENTS, the ME EQUIPMENT shall comply with relevant requirements of this standard and shall continue to provide BASIC SAFETY and ESSENTIAL PERFORMANCE.

Compliance is checked by the following tests, for each DEFIBRILLATION-PROOF APPLIED PART in turn.

- ***Common-mode test***

The ME EQUIPMENT is connected to the test circuit as shown in Figure 9. The test voltage is applied to all the PATIENT CONNECTIONS of the DEFIBRILLATION-PROOF APPLIED PART connected together, excluding any that are PROTECTIVELY EARTHED or functionally earthed. If an APPLIED PART has multiple functions, the test voltage is applied to all the PATIENT CONNECTIONS of one function at a time with the other functions disconnected.

--`,,`,,`-`-`,,`,,`,`,,`---

Copyright International Electrotechnical Commission
Provided by IHS Markit under license with IEC
No reproduction or networking permitted without license from IHS Not for Resale, 08/26/2020 19:12:41 MDT

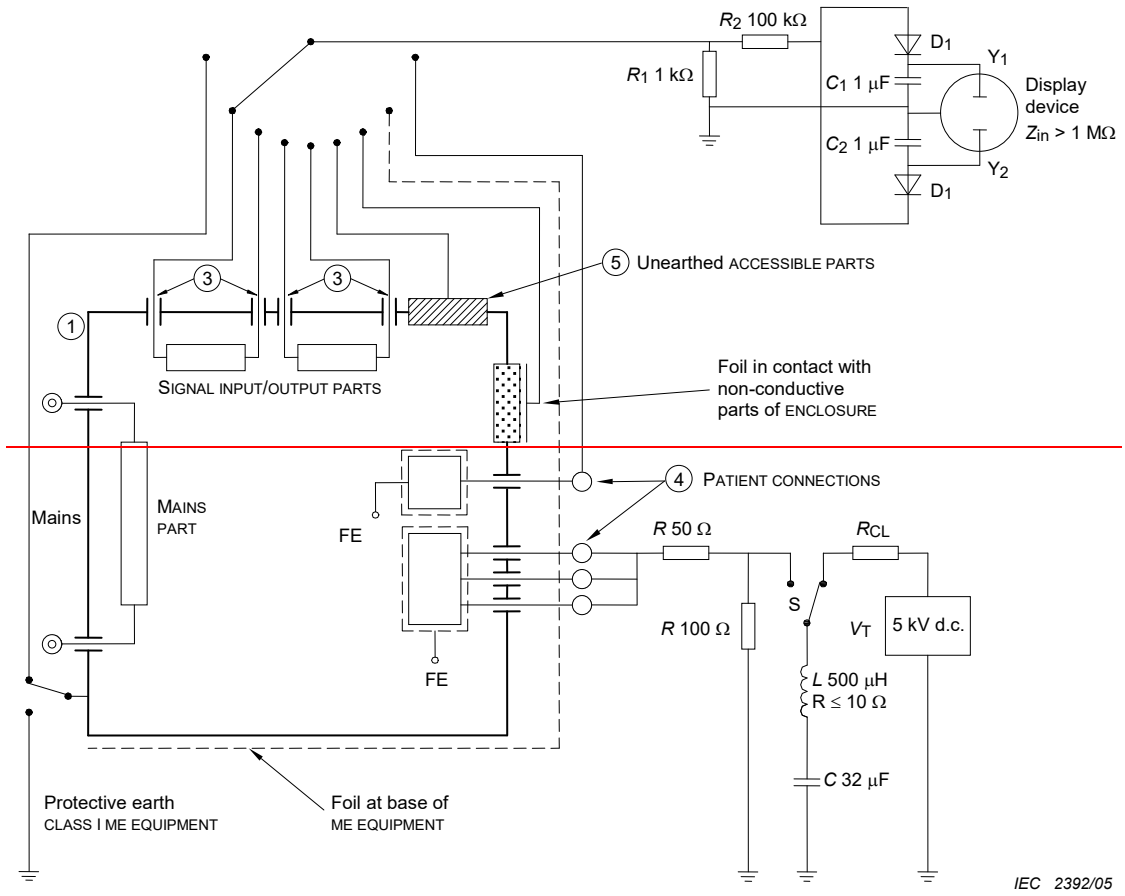

Copyright International Electrotechnical Commission
Provided by IHS Markit under license with IEC
No reproduction or networking permitted without license from IHS
Not for Resale, 08/26/2020 19:12:41 MDT

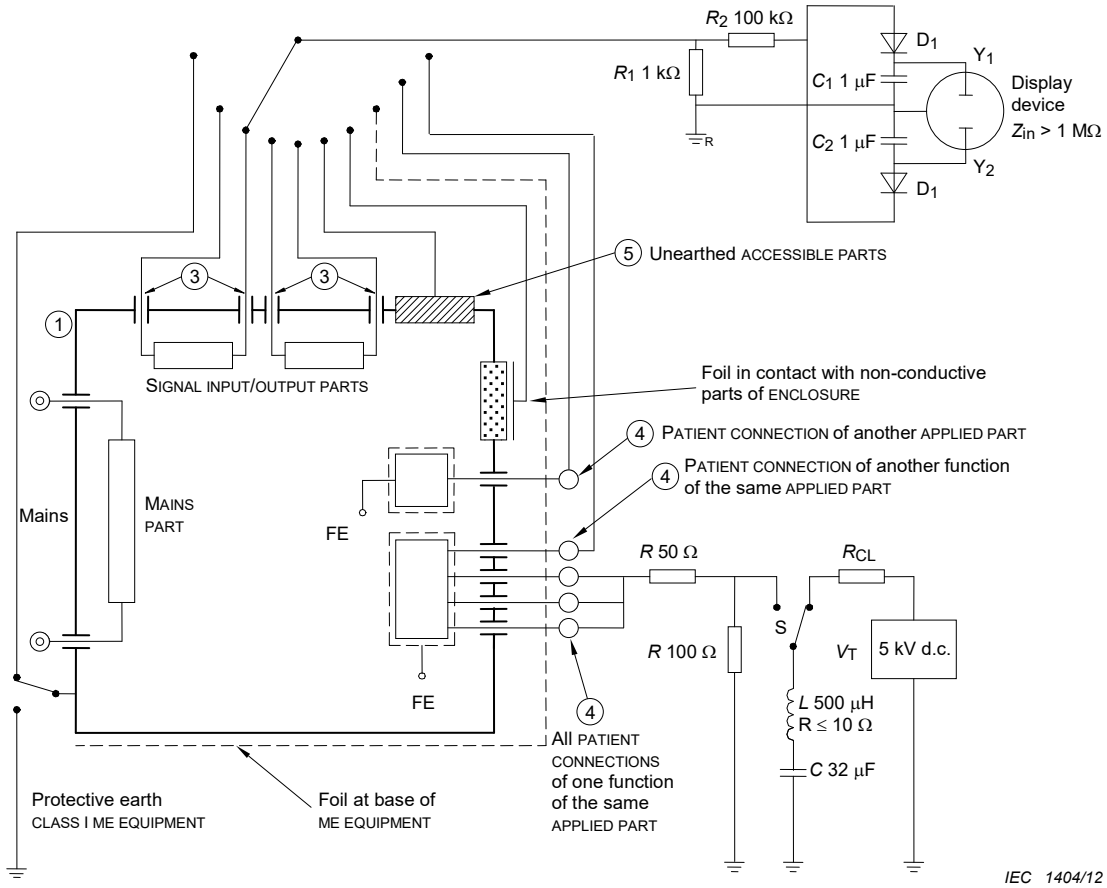

For legends, see Table 5.

Components

V_T	Test voltage
S	Switch for applying the test voltage
R_1, R_2	Tolerance at ± 2 %, not less than 2 kV
R_{CL}	Current limiting resistor
D_1, D_2	Small signal silicon diodes

Other components toleranced at ± 5 %

Figure 9 – Application of test voltage to bridged PATIENT CONNECTIONS for DEFIBRILLATION-PROOF APPLIED PARTS
(see 8.5.5.1)

Copyright International Electrotechnical Commission
Provided by IHS Markit under license with IEC
No reproduction or networking permitted without license from IHS
Not for Resale, 08/26/2020 19:12:41 MDT

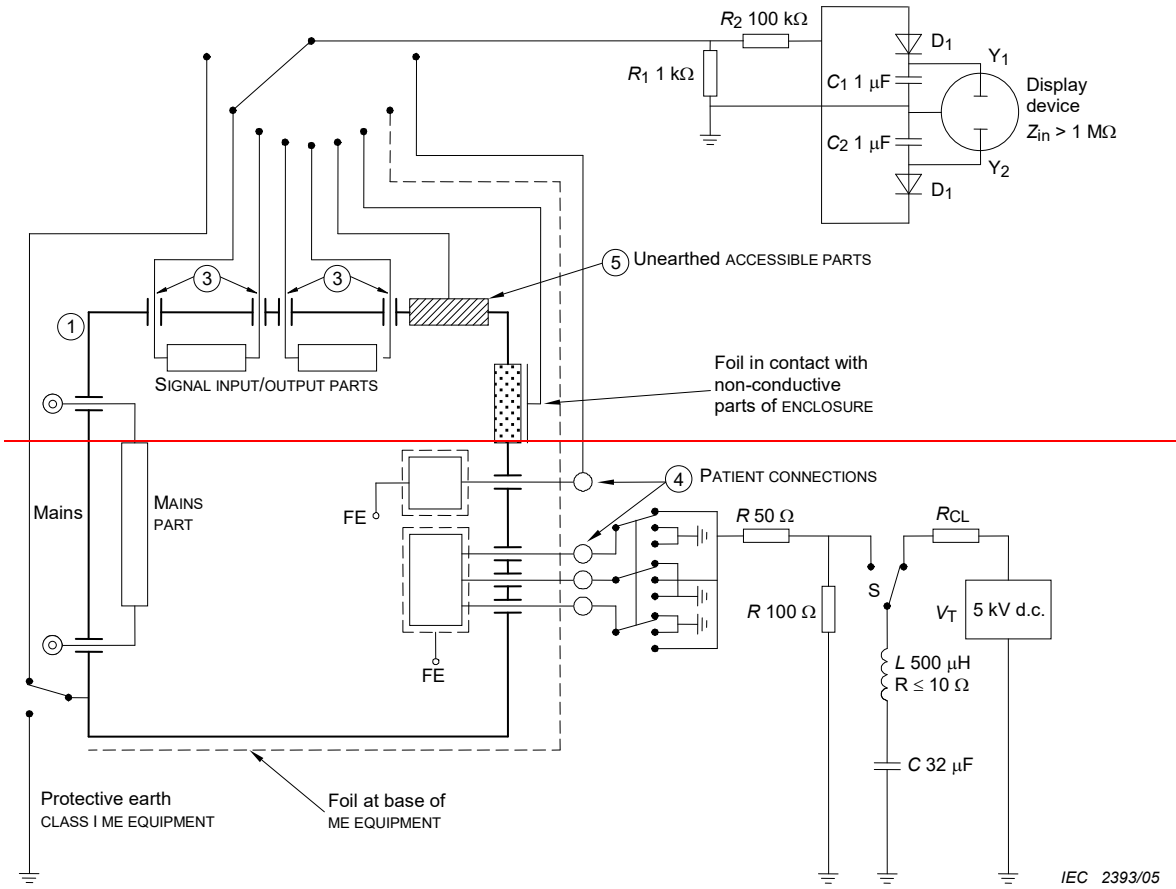

Copyright International Electrotechnical Commission
Provided by IHS Markit under license with IEC
No reproduction or networking permitted without license from IHS
Not for Resale, 08/26/2020 19:12:41 MDT

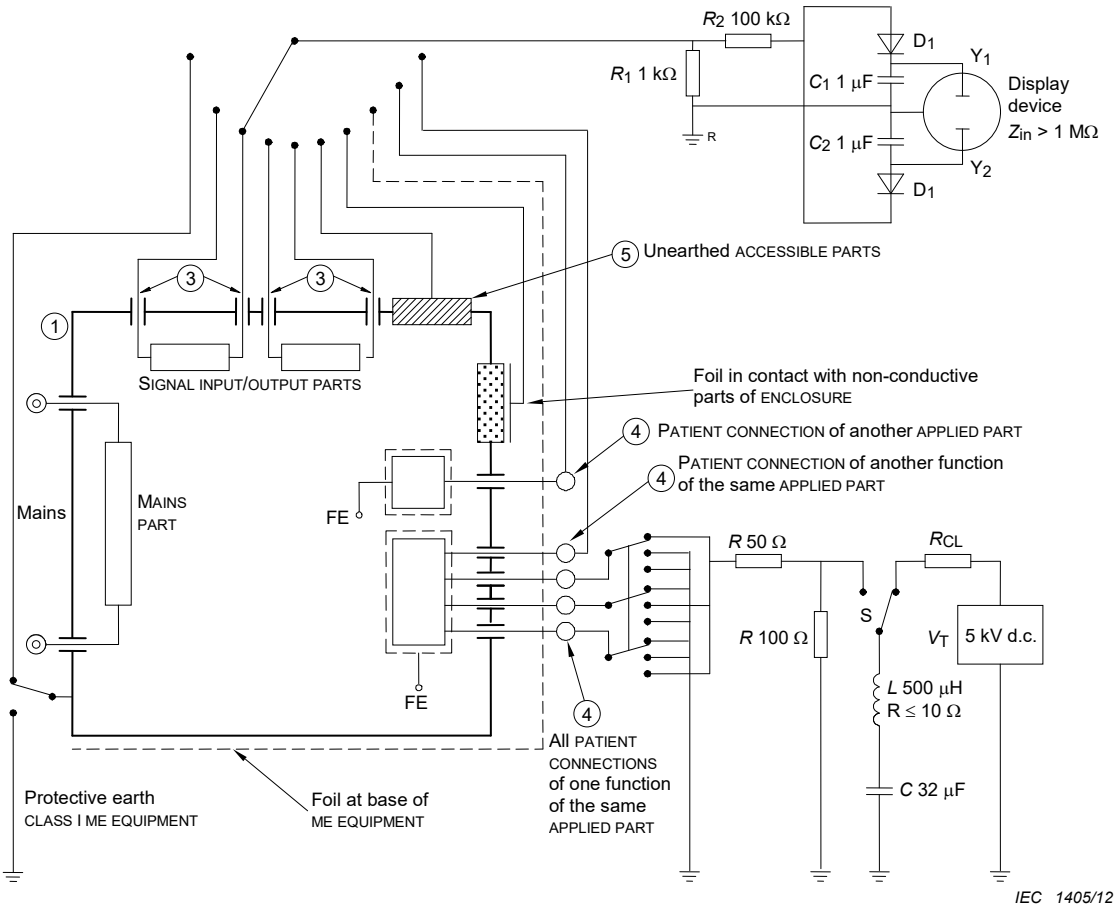

For legends, see Table 5.

Components

V_T	Test voltage
S	Switch for applying the test voltage
R_1, R_2	Tolerance at ± 2 %, not less than 2 kV
R_{CL}	Current limiting resistor
D_1, D_2	Small signal silicon diodes

Other components toleranced at ± 5 %

Figure 10 – Application of test voltage to individual PATIENT CONNECTIONS for DEFIBRILLATION-PROOF APPLIED PARTS
(see 8.5.5.1)

- ***Differential-mode test***

The ME EQUIPMENT is connected to the test circuit as shown in Figure 10. The test voltage is applied to each PATIENT CONNECTION of the DEFIBRILLATION-PROOF APPLIED PART in turn with all the remaining PATIENT CONNECTIONS of the same DEFIBRILLATION-PROOF APPLIED PART being connected to earth.

NOTE 2 The differential-mode test is not used when the APPLIED PART consists of a single PATIENT CONNECTION.

The differential-mode test shall not be performed on an APPLIED PART with multiple PATIENT CONNECTIONS if, based on the INTENDED USE, the PATIENT CONNECTIONS are intended to be completely within the body and in close proximity to each other where it can be assumed that they will all be at the same voltage potential when the PATIENT is defibrillated.

Copyright International Electrotechnical Commission
Provided by IHS Markit under license with IEC
No reproduction or networking permitted without license from IHS
Not for Resale, 08/26/2020 19:12:41 MDT

During the above tests:

– *except for PERMANENTLY INSTALLED ME EQUIPMENT, the ME EQUIPMENT is to be tested with and without the PROTECTIVE EARTH CONDUCTOR connected (i.e. two separate tests);*

– *insulating surfaces of APPLIED PARTS are covered with metal foil or, where appropriate, immersed in a 0,9 % saline solution;*

– *any external connection to a FUNCTIONAL EARTH TERMINAL is removed;*

– *parts specified 8.5.5.1 a) that are not PROTECTIVELY EARTHED are connected in turn to a display device;*

– *the ME EQUIPMENT is connected to the SUPPLY MAINS and operated in accordance with the instructions for use*.

After the operation of S, the peak voltage between the points Y_1 and Y_2 is measured. Each test is repeated with V_T reversed.

After any recovery time stated in the ACCOMPANYING DOCUMENTS, determine that the ME EQUIPMENT continues to provide BASIC SAFETY and ESSENTIAL PERFORMANCE.

8.5.5.2 Energy reduction test

DEFIBRILLATION-PROOF APPLIED PARTS or PATIENT CONNECTIONS of DEFIBRILLATION-PROOF APPLIED PARTS shall incorporate a means so that the defibrillator energy delivered to a 100 Ω load is at least 90 % of the energy delivered to this load with the ME EQUIPMENT disconnected.

If the INTENDED USE of one APPLIED PART with multiple PATIENT CONNECTIONS that are all within close proximity to each other and completely within the body, these PATIENT CONNECTIONS are treated as a single PATIENT CONNECTION.

Compliance is checked by the following test:

The test circuit is shown in Figure 11. For this test, the ACCESSORIES such as cables, electrodes and transducers that are recommended in the instructions for use (see 7.9.2.14) are used. The test voltage is applied to each PATIENT CONNECTION or APPLIED PART in turn with all the remaining PATIENT CONNECTIONS of the same APPLIED PART being connected to earth (differential mode). Other DEFIBRILLATION PROOF APPLIED PARTS, if any, are tested separately, in turn.

The PROCEDURE is as follows.

a) *Connect the APPLIED PART or PATIENT CONNECTION to the test circuit. The parts described in 8.5.5.1 a) are connected to earth.*

b) *Charge capacitor C to 5 kV d.c. with switch S in position A.*

c) *Discharge capacitor C by actuating the switch S to position B, and measure the energy E_1 delivered to the 100 Ω load.*

d) *Remove the ME EQUIPMENT under test from the test circuit and repeat steps b) and c) above, measuring the energy E_2 delivered to the 100 Ω load.*

e) *Verify that the energy E_1 is at least 90 % of E_2.*

f) *Repeat the test with V_T reversed.*

--`,,```,,,,````-`-`,,`,,`,`,,`---

Copyright International Electrotechnical Commission
Provided by IHS Markit under license with IEC
No reproduction or networking permitted without license from IHS Not for Resale, 08/26/2020 19:12:41 MDT

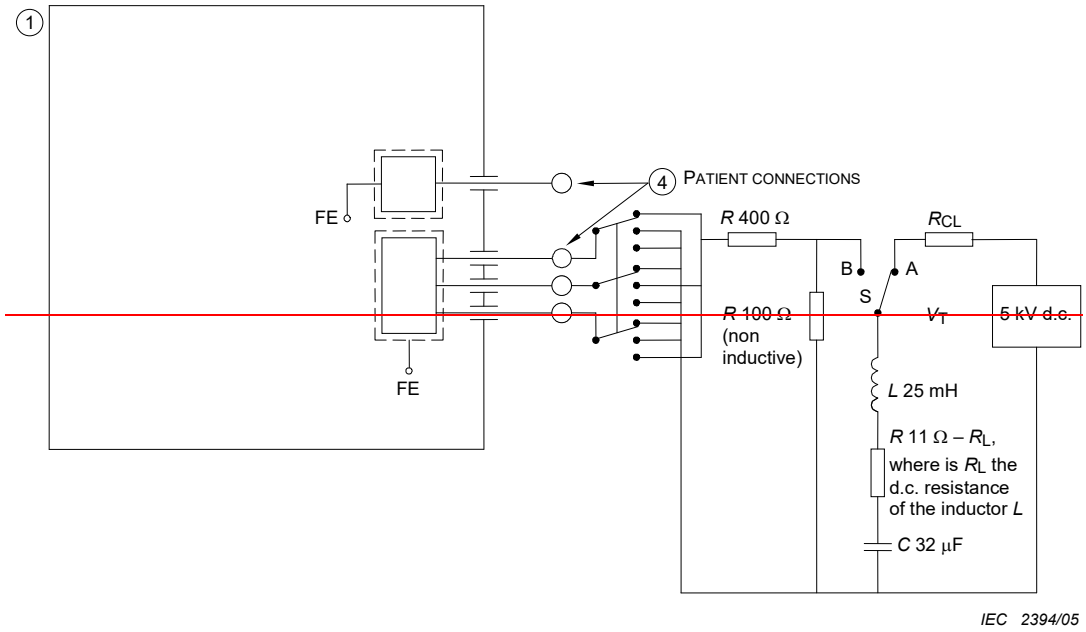

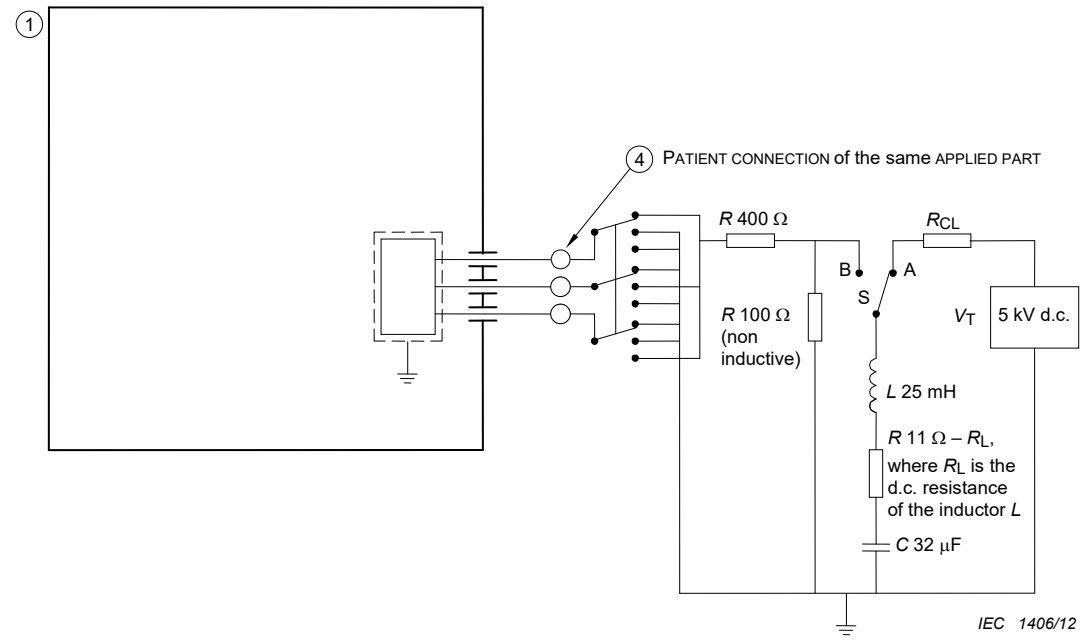

For legends, see Table 5.

Components

S Switch for applying the test energy

A, B Switch positions

R_{CL} Current limiting resistor

Components toleranced at ± 5 %

Figure 11 – Application of test voltage to test the delivered defibrillation energy
(see 8.5.5.2)

8.6 * Protective earthing, functional earthing and potential equalization of ME EQUIPMENT

8.6.1 * Applicability of requirements

The requirements of 8.6.2 to 8.6.8 (inclusive) apply unless the parts concerned comply with the requirements and tests of IEC 60950-1:2005, IEC 60950-1:2005/AMD1:2009 and

Copyright International Electrotechnical Commission
Provided by IHS Markit under license with IEC
No reproduction or networking permitted without license from IHS
Not for Resale, 08/26/2020 19:12:41 MDT

IEC 60950-1:2005/AMD2:2013 or IEC 62368-1:2018 for protective earthing and serve as MEANS OF OPERATOR PROTECTION but not as MEANS OF PATIENT PROTECTION.

8.6.2 * PROTECTIVE EARTH TERMINAL

The PROTECTIVE EARTH TERMINAL of ME EQUIPMENT shall be suitable for connection to an external protective earthing system either by a PROTECTIVE EARTH CONDUCTOR in a POWER SUPPLY CORD and, where appropriate, by a suitable plug, or by a FIXED PROTECTIVE EARTH CONDUCTOR.

The clamping means of the PROTECTIVE EARTH TERMINAL of ME EQUIPMENT for FIXED supply conductors or POWER SUPPLY CORDS shall comply with the requirements of 8.11.4.3. It shall not be possible to loosen the clamping means without the aid of a TOOL.

Screws for internal PROTECTIVE EARTH CONNECTIONS shall be completely covered or protected against accidental loosening from the outside of ME EQUIPMENT.

Where an APPLIANCE INLET forms the supply connection to ME EQUIPMENT, the earth pin of the APPLIANCE INLET shall be regarded as the PROTECTIVE EARTH TERMINAL.

The PROTECTIVE EARTH TERMINAL shall not be used for the mechanical connection between different parts of the ME EQUIPMENT or the fixing of any component not related to protective earthing or functional earthing.

Compliance is checked by inspection of materials and construction, by manual tests, and by the test of 8.11.4.3.

8.6.3 * Protective earthing of moving parts

Any PROTECTIVE EARTH CONNECTION shall not be used for a moving part unless the MANUFACTURER demonstrates that the connection will remain reliable during the EXPECTED SERVICE LIFE of the ME EQUIPMENT.

Compliance is checked by inspection of the ME EQUIPMENT and if necessary inspection of the RISK MANAGEMENT FILE.

8.6.4 Impedance and current-carrying capability

a) * PROTECTIVE EARTH CONNECTIONS shall be able to carry fault currents reliably and without excessive voltage drop.

For PERMANENTLY INSTALLED ME EQUIPMENT, the impedance between the PROTECTIVE EARTH TERMINAL and any part that is PROTECTIVELY EARTHED shall not exceed 100 mΩ, except as allowed by 8.6.4 b).

For ME EQUIPMENT with an APPLIANCE INLET the impedance between the earth pin in the APPLIANCE INLET and any part that is PROTECTIVELY EARTHED shall not exceed 100 mΩ, except as allowed by 8.6.4 b).

For ME EQUIPMENT with a non-DETACHABLE POWER SUPPLY CORD the impedance between the protective earth pin in the MAINS PLUG and any part that is PROTECTIVELY EARTHED shall not exceed 200 mΩ, except as allowed by 8.6.4 b).

Additionally, the impedance between the protective earth pin in the MAINS PLUG of any DETACHABLE POWER SUPPLY CORD supplied or specified by the MANUFACTURER, when attached to the ME EQUIPMENT, and any part of the ME EQUIPMENT that is PROTECTIVELY EARTHED shall not exceed 200 mΩ, except as allowed by 8.6.4 b).

Testing shall be carried out using a DETACHABLE POWER SUPPLY CORD as provided or specified (length and cross-sectional area) by the MANUFACTURER.

Copyright International Electrotechnical Commission
Provided by IHS Markit under license with IEC
No reproduction or networking permitted without license from IHS Not for Resale, 08/26/2020 19:12:41 MDT

Compliance is checked by the following test:

A current of 25 A or 1,5 times the highest RATED current of the relevant circuit(s), whichever is greater (± 10 %), from a current source with a frequency of 50 Hz or 60 Hz and with a no-load voltage not exceeding 6 V, is passed for 5 s to 10 s through the PROTECTIVE EARTH TERMINAL or the protective earth contact in the APPLIANCE INLET or the protective earth pin in the MAINS PLUG and each PROTECTIVELY EARTHED part.

Alternatively, d.c. may be used for this test.

The highest RATED current is the RATED current of the over-current protection in the ME EQUIPMENT, when present, for all circuits located behind the over-current protection. From the SUPPLY MAINS to the over-current protection in the ME EQUIPMENT, the highest RATED current is the RATED current of the over-current protection device in the building installation.

NOTE When protective earth is relied on as a MEANS OF PROTECTION, the test current is determined based on the location where a fault could occur. If the prospective fault is in the mains supply circuit prior to the over-current protection included in the ME EQUIPMENT, the test current for that part of the protective earth circuit is based on the rating of the external over-current protection included in the building infrastructure or specified in the ACCOMPANYING DOCUMENTS (1,5 times the interrupt rating of the external over-current protection). If the prospective fault is in the mains supply circuit after the over-current protection included in the ME EQUIPMENT, the test current is based on the rating of the over-current protection included in the ME EQUIPMENT (1,5 times the interrupt rating of the ME EQUIPMENT over-current protection). In either case, the minimum test current is 25 A.

The voltage drop between the parts described is measured and the impedance determined from the current and voltage drop.

Where the product of the test current as specified above and the total impedance (i.e. the impedance being measured plus the impedance of the test leads and the contact impedances) would exceed 6 V, the impedance is first measured with a no-load voltage not exceeding 6 V.

If the measured impedance is within the permitted limit, either the impedance measurement is then repeated using a current source with a no-load voltage sufficient to deliver the specified current into the total impedance, or the current-carrying ability of the relevant protective earth conductor and protective earth connection is confirmed by checking that their cross sectional area is at least equal to that of the relevant current-carrying conductors.

b) * The impedance of PROTECTIVE EARTH CONNECTIONS is allowed to exceed the values specified above if the relevant circuits have limited current capability such that, in case of short circuit of relevant insulation, the allowable values of the TOUCH CURRENT and the PATIENT LEAKAGE CURRENT in SINGLE FAULT CONDITION are not exceeded.

Compliance is checked by inspection and if necessary by measurement of LEAKAGE CURRENT in the relevant SINGLE FAULT CONDITION. Transient currents occurring during the first 50 ms following the short circuit are disregarded.

8.6.5 Surface coatings

Conductive elements of ME EQUIPMENT that have surface coatings of poorly conducting material such as paint, and between which electrical contact is essential to a PROTECTIVE EARTH CONNECTION, shall have the coatings removed at the point of contact unless an investigation of the joint construction and the manufacturing PROCESS has demonstrated that the requirements for impedance and current-carrying capacity are assured without the removal of the surface coating.

Compliance is checked by inspection.

8.6.6 Plugs and sockets

Where the connection between the SUPPLY MAINS and ME EQUIPMENT or between separate parts of ME EQUIPMENT that can be operated by persons other than SERVICE PERSONNEL is

Copyright International Electrotechnical Commission
Provided by IHS Markit under license with IEC
No reproduction or networking permitted without license from IHS Not for Resale, 08/26/2020 19:12:41 MDT

made via a plug and socket device, the PROTECTIVE EARTH CONNECTION shall be made before and interrupted after the supply connections are made or interrupted. This applies also where interchangeable parts are PROTECTIVELY EARTHED.

Compliance is checked by inspection.

8.6.7 * POTENTIAL EQUALIZATION CONDUCTOR

If ME EQUIPMENT is provided with a terminal for the connection of a POTENTIAL EQUALIZATION CONDUCTOR, the following requirements apply.

– The terminal shall be accessible to the OPERATOR with the ME EQUIPMENT in any position of NORMAL USE.

– ~~The RISK of~~ Accidental disconnection shall be ~~minimized~~ avoided in NORMAL USE.

– The terminal shall allow the conductor to be detached without the use of a TOOL.

– The terminal shall not be used for a PROTECTIVE EARTH CONNECTION.

– The terminal shall be marked with symbol IEC 60417-5021 (~~DB:~~2002-10) (see Table D.1, symbol 8).

– The instructions for use shall contain information on the function and use of the POTENTIAL EQUALIZATION CONDUCTOR together with a reference to the requirements of this standard for ME SYSTEMS.

The POWER SUPPLY CORD shall not incorporate a POTENTIAL EQUALIZATION CONDUCTOR.

Compliance is checked by inspection.

8.6.8 FUNCTIONAL EARTH TERMINAL

A FUNCTIONAL EARTH TERMINAL of ME EQUIPMENT shall not be used to provide a PROTECTIVE EARTH CONNECTION.

Compliance is checked by inspection.

8.6.9 * CLASS II ME EQUIPMENT

If CLASS II ME EQUIPMENT with isolated internal screens is supplied with a POWER SUPPLY CORD having three conductors, the third conductor (connected to the protective earth contact of the MAINS PLUG) shall be used only as the functional earth connection to a FUNCTIONAL EARTH TERMINAL for these screens and shall be coloured green and yellow. In such a case, the ACCOMPANYING DOCUMENTS shall state that the third conductor in the POWER SUPPLY CORD is only a functional earth.

~~The insulation of such internal screens and all internal wiring connected to them shall provide two MEANS OF PROTECTION. In such case, there shall be an explanation in the technical description.~~

The insulation between internal screens, including internal wiring connected to them and ACCESSIBLE PARTS, shall provide two MEANS OF PROTECTION.

Compliance is checked by inspection and measurement. The insulation is tested as described in 8.8.

8.7 LEAKAGE CURRENTS and PATIENT AUXILIARY CURRENTS

8.7.1 General requirements

a) The electrical isolation providing protection against electric shock shall be of such quality that currents flowing through it are limited to the values specified in 8.7.3.

Copyright International Electrotechnical Commission
Provided by IHS Markit under license with IEC
No reproduction or networking permitted without license from IHS
Not for Resale, 08/26/2020 19:12:41 MDT

b) The specified values of the EARTH LEAKAGE CURRENT, the TOUCH CURRENT, the PATIENT LEAKAGE CURRENT and the PATIENT AUXILIARY CURRENT apply in any combination of the following conditions:

- at operating temperature and following the humidity preconditioning treatment, as described in 5.7;
- after any required sterilization PROCEDURE (see 11.6.7);
- in NORMAL CONDITION and in the SINGLE FAULT CONDITIONS specified in 8.7.2;
- with ME EQUIPMENT energized in stand-by condition and fully operating and with any switch in the MAINS PART in any position;
- with the highest RATED supply frequency;
- with a supply equal to 110 % of the highest RATED MAINS VOLTAGE.

8.7.2 * SINGLE FAULT CONDITIONS

The allowable values specified in 8.7.3 apply in the SINGLE FAULT CONDITIONS specified in 8.1 b) except that:

- where insulation is used in conjunction with a PROTECTIVE EARTH CONNECTION, short circuit of the insulation applies only in the circumstances specified in 8.6.4 b);
- the only SINGLE FAULT CONDITION for the EARTH LEAKAGE CURRENT is the interruption of one supply conductor at a time;
- LEAKAGE CURRENTS and PATIENT AUXILIARY CURRENT are not measured in the SINGLE FAULT CONDITION of short circuiting of one constituent part of DOUBLE INSULATION.

SINGLE FAULT CONDITIONS shall not be applied at the same time as the special test conditions of MAXIMUM MAINS VOLTAGE on APPLIED PARTS (8.7.4.7 b)) and non-PROTECTIVELY EARTHED parts of the ENCLOSURE (8.7.4.7 d)).

8.7.3 * Allowable values

a) The allowable values specified in 8.7.3 b), c) and d) apply to currents flowing through the network of Figure 12 a) and measured as shown in this figure (or by a device measuring the frequency contents of the currents as defined in Figure 12 b)). The values apply to d.c. and a.c. and composite waveforms. Unless stated otherwise they may be d.c. or r.m.s.

b) The allowable values of the PATIENT LEAKAGE CURRENTS and PATIENT AUXILIARY CURRENTS are stated in Table 3 and Table 4. The values of a.c. apply to currents having a frequency not less than 0,1 Hz.

c) The allowable values of the TOUCH CURRENT are 100 μA in NORMAL CONDITION and 500 μA in SINGLE FAULT CONDITION.

d) The allowable values of the EARTH LEAKAGE CURRENT are 5 mA in NORMAL CONDITION and 10 mA in SINGLE FAULT CONDITION. For PERMANENTLY INSTALLED ME EQUIPMENT connected to a supply circuit that supplies only this ME EQUIPMENT, a higher value of EARTH LEAKAGE CURRENT is allowed.

NOTE 1 Local regulation can establish limits for protective earth currents of the installation. See also IEC 60364-7-710 [10].

NOTE 2 The EARTH LEAKAGE CURRENT in NORMAL CONDITION can become TOUCH CURRENT in SINGLE FAULT CONDITION unless the ME EQUIPMENT is PERMANENTLY INSTALLED or the protective earth is not accessible from outside the ME EQUIPMENT.

e) Additionally, regardless of waveform and frequency, ~~no~~ LEAKAGE CURRENT shall not exceed 10 mA r.m.s. in NORMAL CONDITION or in SINGLE FAULT CONDITION when measured with a non-frequency-weighted device, such as a measuring device similar to that shown in Figure 12 a) but without C_1 and R_1.

Copyright International Electrotechnical Commission
Provided by IHS Markit under license with IEC
No reproduction or networking permitted without license from IHS
Not for Resale, 08/26/2020 19:12:41 MDT

f) *. The allowable values of LEAKAGE CURRENTS that can flow in a FUNCTIONAL EARTH CONDUCTOR in a non-PERMANENTLY INSTALLED ME EQUIPMENT are 5 mA in NORMAL CONDITION and 10 mA in SINGLE FAULT CONDITION.

NOTE 3 Subclause 16.6.1 requires that when ME EQUIPMENT is included in an ME SYSTEM, the TOUCH CURRENTS from any part of the ME SYSTEM cannot exceed 100 µA in NORMAL CONDITION and 500 µA in SINGLE FAULT CONDITION.

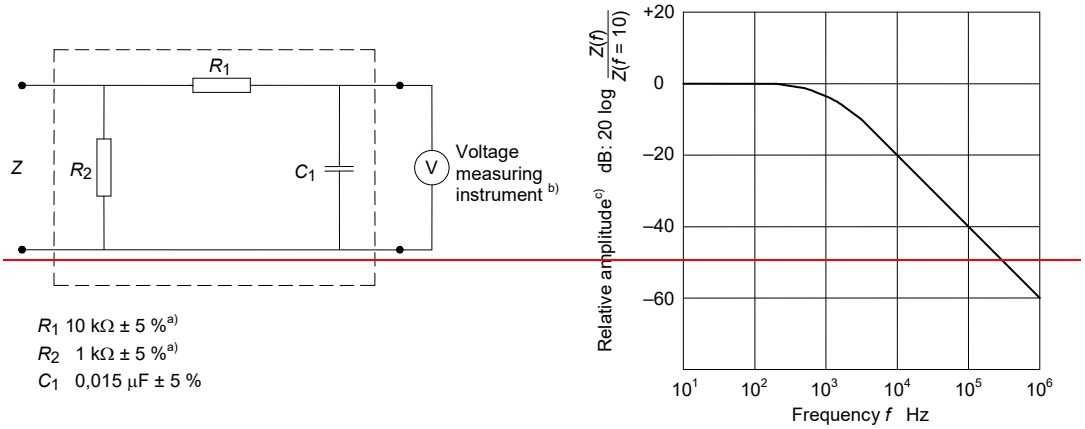

a) Measuring device

b) Frequency characteristics

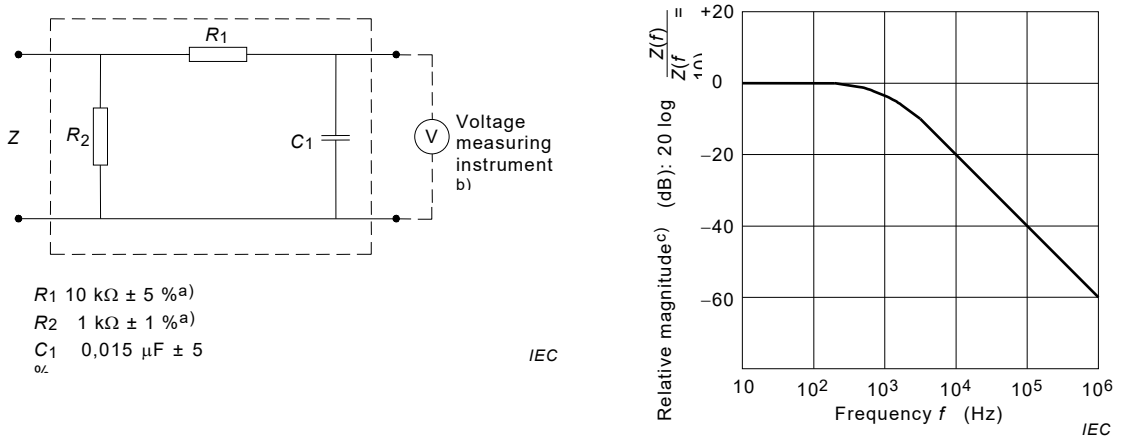

a) Measuring device

b) Frequency characteristics

NOTE The network and voltage measuring instrument above are replaced by the symbol

in the following figures.

a) Non-inductive components
b) Resistance ≥ 1 MΩ and capacitance ≤ 150 pF
c) $Z(f)$ is the transfer impedance of the network, i.e. V_{out}/I_{in}, for a current of frequency f.

Figure 12 – Example of a measuring device and its frequency characteristics
(see 8.7.3)

Copyright International Electrotechnical Commission
Provided by IHS Markit under license with IEC
No reproduction or networking permitted without license from IHS
Not for Resale, 08/26/2020 19:12:41 MDT

Table 3 – * Allowable values of PATIENT LEAKAGE CURRENTS and PATIENT AUXILIARY CURRENTS under NORMAL CONDITION and SINGLE FAULT CONDITION

Current in μA

Current	Description	Reference	Measuring Circuit		TYPE B APPLIED PART		TYPE BF APPLIED PART		TYPE CF APPLIED PART	
					NC	SFC	NC	SFC	NC	SFC
PATIENT AUXILIARY CURRENT		8.7.4.8	Figure 19	d.c.	10	50	10	50	10	50
				a.c.	100	500	100	500	10	50
PATIENT LEAKAGE CURRENT	From PATIENT CONNECTION to earth	8.7.4.7 a)	Figure 15	d.c.	10	50	10	50	10	50
				a.c.	100	500	100	500	10	50
	Caused by an external voltage on a SIP/SOP	8.7.4.7 c)	Figure 17	d.c.	10	50	10	50	10	50
				a.c.	100	500	100	500	10	50
Total PATIENT LEAKAGE CURRENT [a]	With the same types of APPLIED PART connected together	8.7.4.7 a) and 8.7.4.7 h)	Figure 15 and Figure 20	d.c.	50	100	50	100	50	100
				a.c.	500	1 000	500	1 000	50	100
	Caused by an external voltage on a SIP/SOP	8.7.4.7 c) and 8.7.4.7 h)	Figure 17 and Figure 20	d.c.	50	100	50	100	50	100
				a.c.	500	1 000	500	1 000	50	100

Key
NC = NORMAL CONDITION
SFC = SINGLE FAULT CONDITION

NOTE 1 For EARTH LEAKAGE CURRENT see 8.7.3 d).

NOTE 2 For TOUCH CURRENT see 8.7.3 c).

[a] Total PATIENT LEAKAGE CURRENT values are only applicable to equipment having multiple APPLIED PARTS. See 8.7.4.7 h). The individual APPLIED PARTS shall comply with the PATIENT LEAKAGE CURRENT values.

Copyright International Electrotechnical Commission
Provided by IHS Markit under license with IEC
No reproduction or networking permitted without license from IHS
Not for Resale, 08/26/2020 19:12:41 MDT

Table 4 – * Allowable values of PATIENT LEAKAGE CURRENTS under the special test conditions identified in 8.7.4.7

Current in μA

Current	Description [a]	Reference	Measuring Circuit	TYPE B APPLIED PART	TYPE BF APPLIED PART	TYPE CF APPLIED PART
PATIENT LEAKAGE CURRENT	Caused by an external voltage on the PATIENT CONNECTION of an F-TYPE APPLIED PART	8.7.4.7 b)	Figure 16	Not applicable	5 000	50
	Caused by an external voltage on a metal ACCESSIBLE PART not PROTECTIVELY EARTHED	8.7.4.7 d)	Figure 18	500	500	– [c]
Total PATIENT LEAKAGE CURRENT [b]	Caused by an external voltage on the PATIENT CONNECTION of an F-TYPE APPLIED PART	8.7.4.7 b) and 8.7.4.7 h)	Figure 16 and Figure 20	Not applicable	5 000	100
	Caused by an external voltage on a metal ACCESSIBLE PART not PROTECTIVELY EARTHED	8.7.4.7 d) and 8.7.4.7 h)	Figure 18 and Figure 20	1 000	1 000	– [c]

[a] The condition referred to in Table IV of the second edition as "MAINS VOLTAGE on APPLIED PART", and treated in that edition as a SINGLE FAULT CONDITION, is treated in this edition as a special test condition. The test with MAXIMUM MAINS VOLTAGE on a non-PROTECTIVELY EARTHED ACCESSIBLE PART is also a special test condition, but the allowable values are the same as for SINGLE FAULT CONDITION. See also the rationales for 8.5.2.2 and 8.7.4.7 d).

[b] Total PATIENT LEAKAGE CURRENT values are only applicable to equipment having multiple APPLIED PARTS. See 8.7.4.7 h). The individual APPLIED PARTS shall comply with the PATIENT LEAKAGE CURRENT values.

[c] This condition is not tested with TYPE CF APPLIED PARTS because it is covered by the test with MAXIMUM MAINS VOLTAGE on the APPLIED PART. See also the rationale for 8.7.4.7 d).

8.7.4 Measurements

8.7.4.1 General

The LEAKAGE CURRENT and PATIENT AUXILIARY CURRENT test figures referenced in 8.7.4.5 to 8.7.4.8 (Figure 13 to Figure 19 inclusive) show suitable test configurations for use in conjunction with the test PROCEDURES specified in these subclauses. It is recognized that other test figures can yield accurate results. However if the test results are close to the allowed values or if there is any doubt as to the validity of the test results, the applicable test figure is to be used as the deciding factor.

a) The EARTH LEAKAGE CURRENT, the TOUCH CURRENT, the PATIENT LEAKAGE CURRENT and the PATIENT AUXILIARY CURRENT are measured after the ME EQUIPMENT has been brought up to operating temperature in accordance with the requirements of 11.1.3 c).

b) Where examination of the circuit arrangement and the arrangement of components and material of the ME EQUIPMENT shows no possibility of any HAZARDOUS SITUATION described in 13.1, the number of tests can be reduced.

Copyright International Electrotechnical Commission
Provided by IHS Markit under license with IEC
No reproduction or networking permitted without license from IHS
Not for Resale, 08/26/2020 19:12:41 MDT

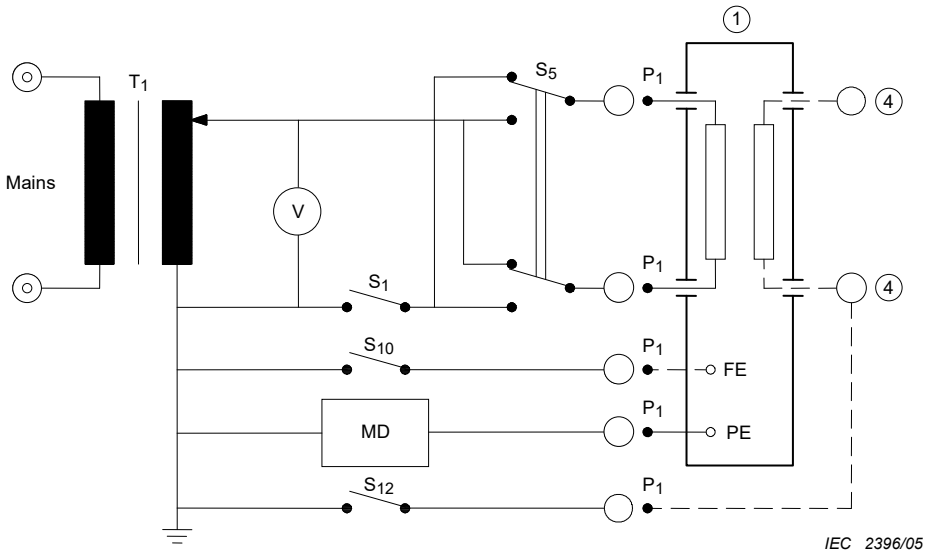

For legends, see Table 5.

Key

Measure in all possible combinations of positions of S_5, S_{10} and S_{12} with:

S_1 closed (NORMAL CONDITION), and
S_1 open (SINGLE FAULT CONDITION).

Example with the measuring supply circuit of Figure F.1

Figure 13 – Measuring circuit for ~~the~~ EARTH LEAKAGE CURRENT of CLASS I ME EQUIPMENT, with or without APPLIED PART
(see 8.7.4.5)

Copyright International Electrotechnical Commission
Provided by IHS Markit under license with IEC
No reproduction or networking permitted without license from IHS
Not for Resale, 08/26/2020 19:12:41 MDT

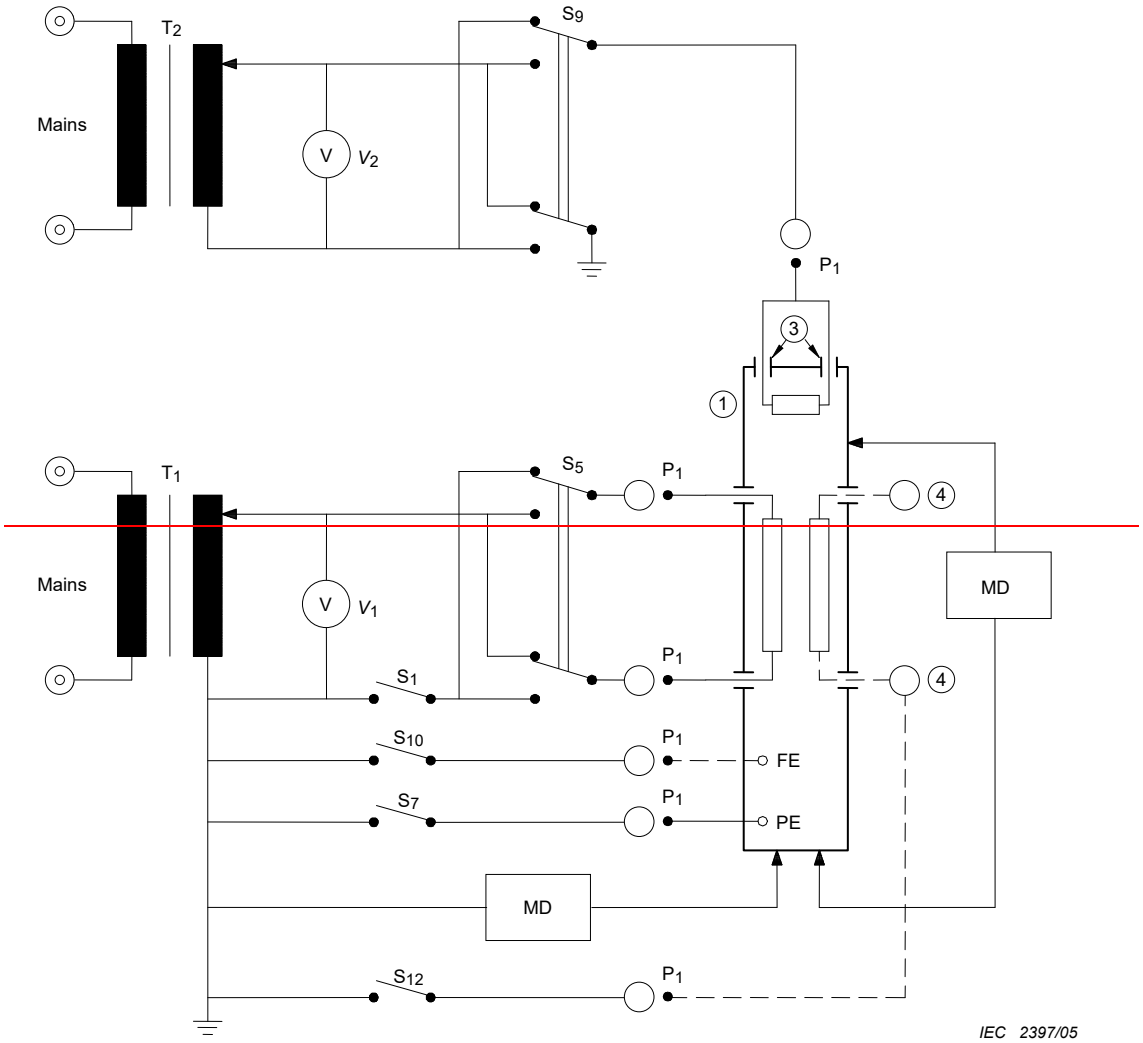

Copyright International Electrotechnical Commission
Provided by IHS Markit under license with IEC
No reproduction or networking permitted without license from IHS
Not for Resale, 08/26/2020 19:12:41 MDT

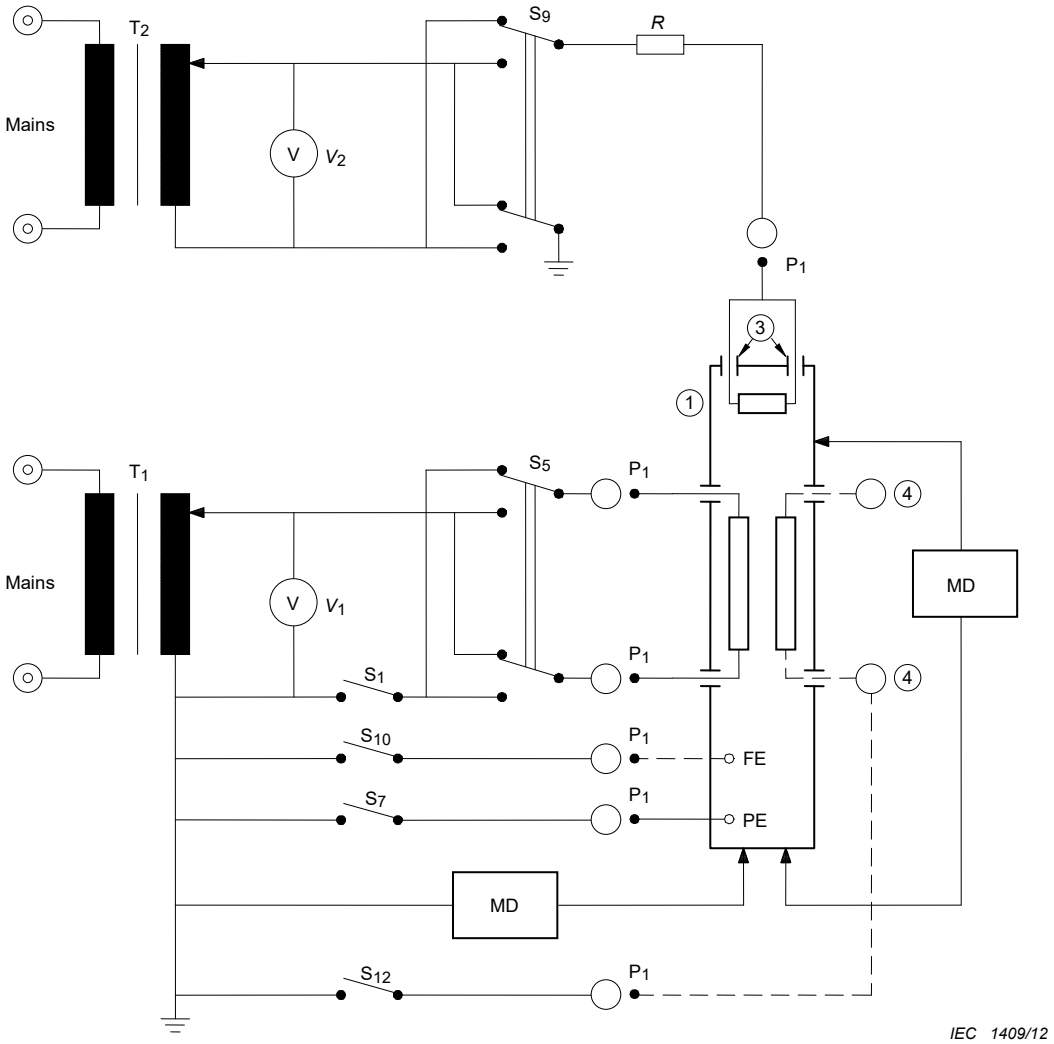

For legends, see Table 5.

Key

Measure (with S_7 closed if CLASS I ME equipment) under all possible combinations of positions of S_1, S_5, S_9, S_{10}, and S_{12}.

S_1 open is SINGLE FAULT CONDITION.

CLASS I ME equipment only:
Measure with S_7 open (SINGLE FAULT CONDITION) and with S_1 closed under all possible combinations of S_5, S_9, S_{10} and S_{12}.

For CLASS II ME equipment, the PROTECTIVE EARTH CONNECTION and S_7 are not used.

Transformer T_2 is used if required (see 8.1 a))

Example with the measuring supply circuit of Figure F.1.

Figure 14 – Measuring circuit for ~~the~~ TOUCH CURRENT
(see 8.7.4.6)

Copyright International Electrotechnical Commission
Provided by IHS Markit under license with IEC
No reproduction or networking permitted without license from IHS
Not for Resale, 08/26/2020 19:12:41 MDT

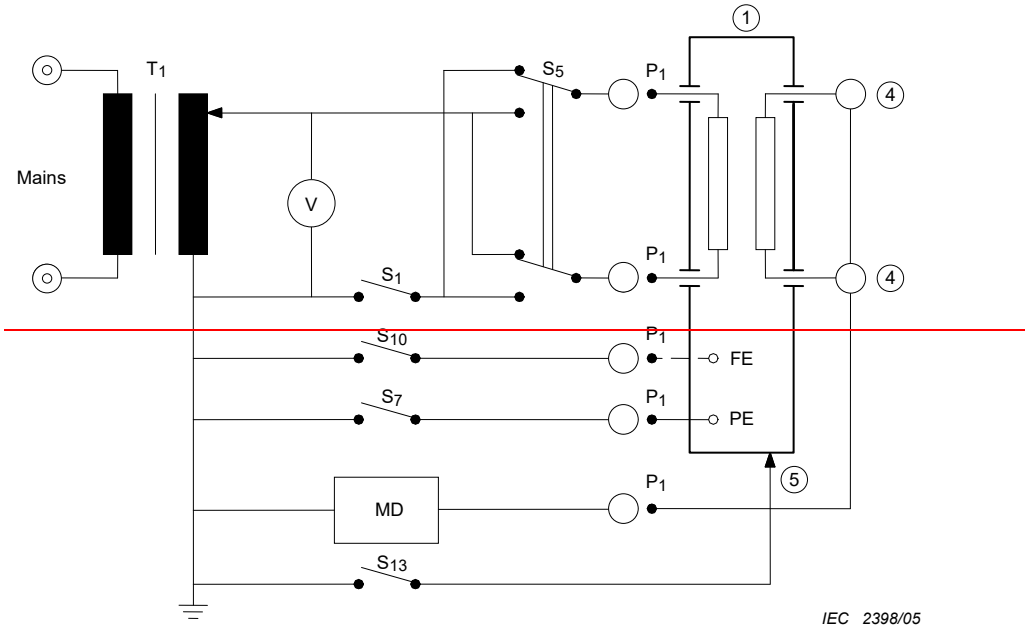

Copyright International Electrotechnical Commission
Provided by IHS Markit under license with IEC
No reproduction or networking permitted without license from IHS
Not for Resale, 08/26/2020 19:12:41 MDT

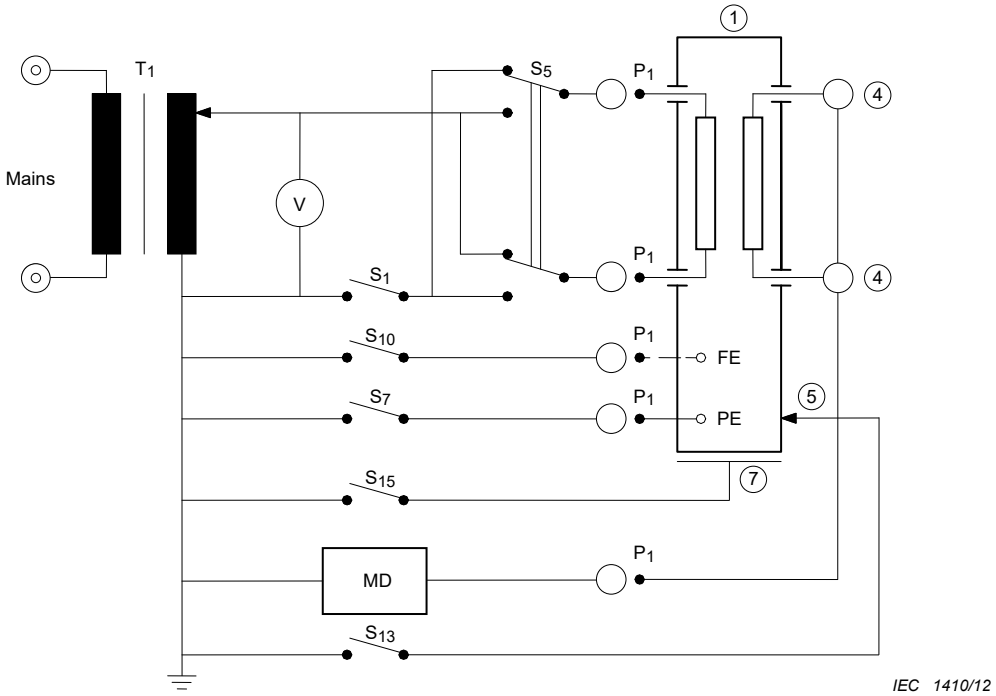

For legends, see Table 5.

Key

Measure (with S_7 closed if CLASS I ME EQUIPMENT) under all possible combinations of positions of S_1, S_5, S_{10}, S_{13} and S_{15}.

S_1 open is SINGLE FAULT CONDITION.

CLASS I ME EQUIPMENT only:
Measure with S_7 open (SINGLE FAULT CONDITION) and with S_1 closed under all possible combinations of S_5, S_{10}, S_{13} and S_{15}.

For CLASS II ME EQUIPMENT, the PROTECTIVE EARTH CONNECTION and S_7 are not used.

Example with the measuring supply circuit of Figure F.1.

Figure 15 – Measuring circuit for ~~the~~ PATIENT LEAKAGE CURRENT from the PATIENT CONNECTION to earth
(see 8.7.4.7 a))

Copyright International Electrotechnical Commission
Provided by IHS Markit under license with IEC
No reproduction or networking permitted without license from IHS
Not for Resale, 08/26/2020 19:12:41 MDT

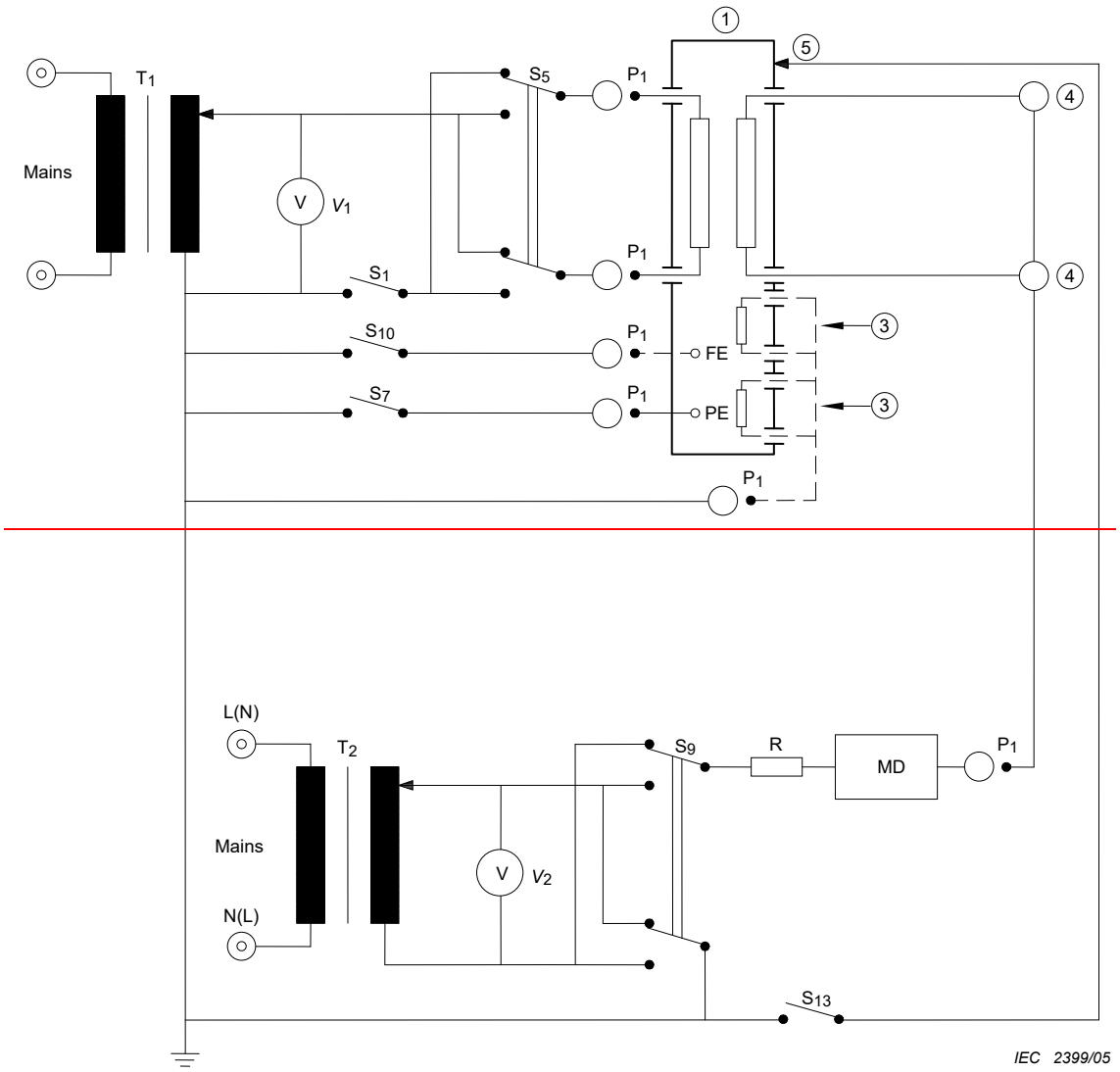

Copyright International Electrotechnical Commission
Provided by IHS Markit under license with IEC
No reproduction or networking permitted without license from IHS
Not for Resale, 08/26/2020 19:12:41 MDT

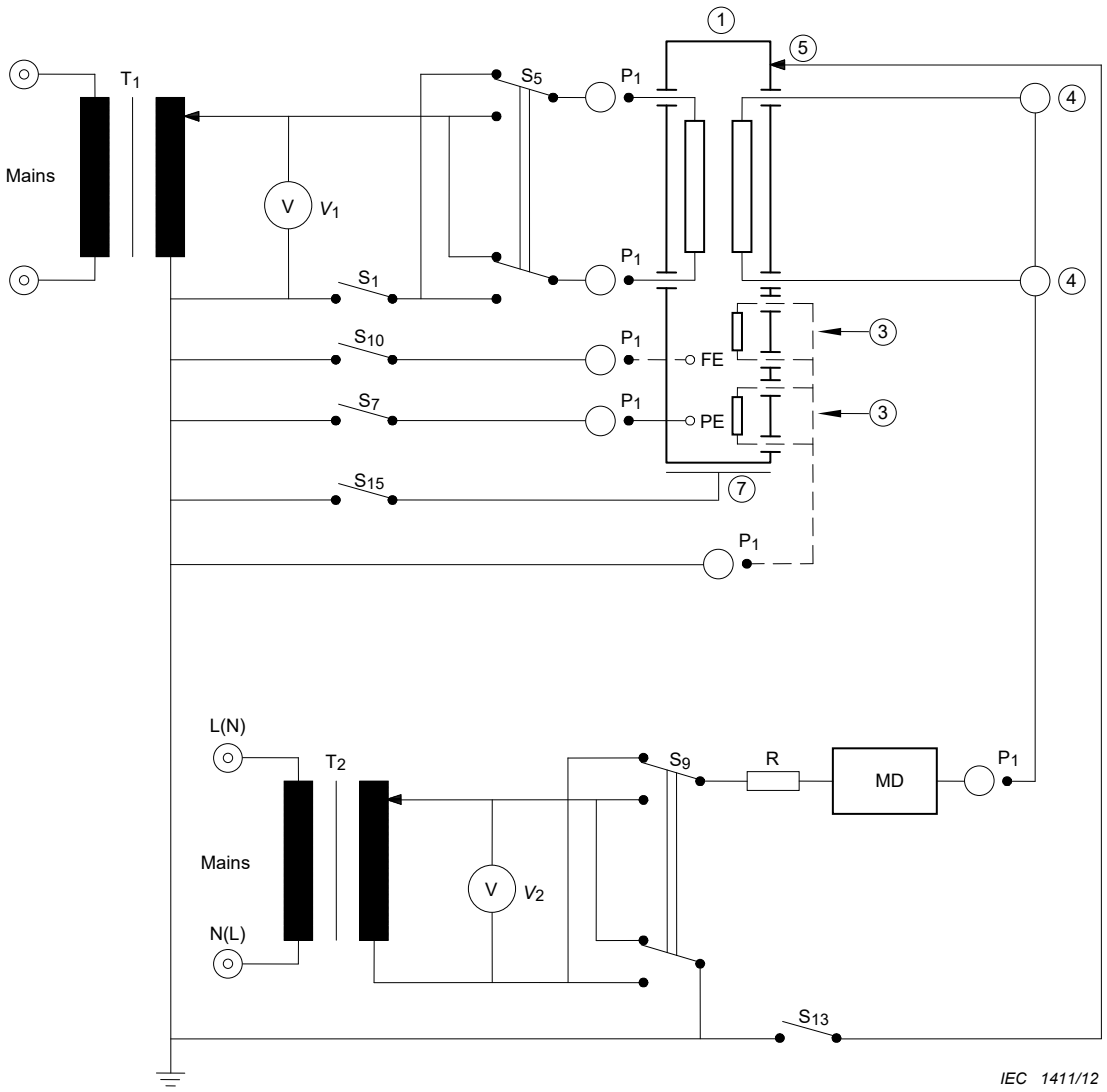

For legends, see Table 5.

Key

Measure (with S_7 closed, if CLASS I ME EQUIPMENT) WITH S_1 closed under all possible combinations of positions of S_5, S_9, S_{10} and S_{13}.

For CLASS II ME EQUIPMENT, the PROTECTIVE EARTH CONNECTION and S_7 are not used.

Example with the measuring supply circuit of Figure F.1.

Figure 16 – Measuring circuit for ~~the~~ PATIENT LEAKAGE CURRENT via the PATIENT CONNECTION(S) of an F-TYPE APPLIED PART to earth caused by an external voltage on the PATIENT CONNECTION(S)
(see 8.7.4.7 b))

Copyright International Electrotechnical Commission
Provided by IHS Markit under license with IEC
No reproduction or networking permitted without license from IHS
Not for Resale, 08/26/2020 19:12:41 MDT

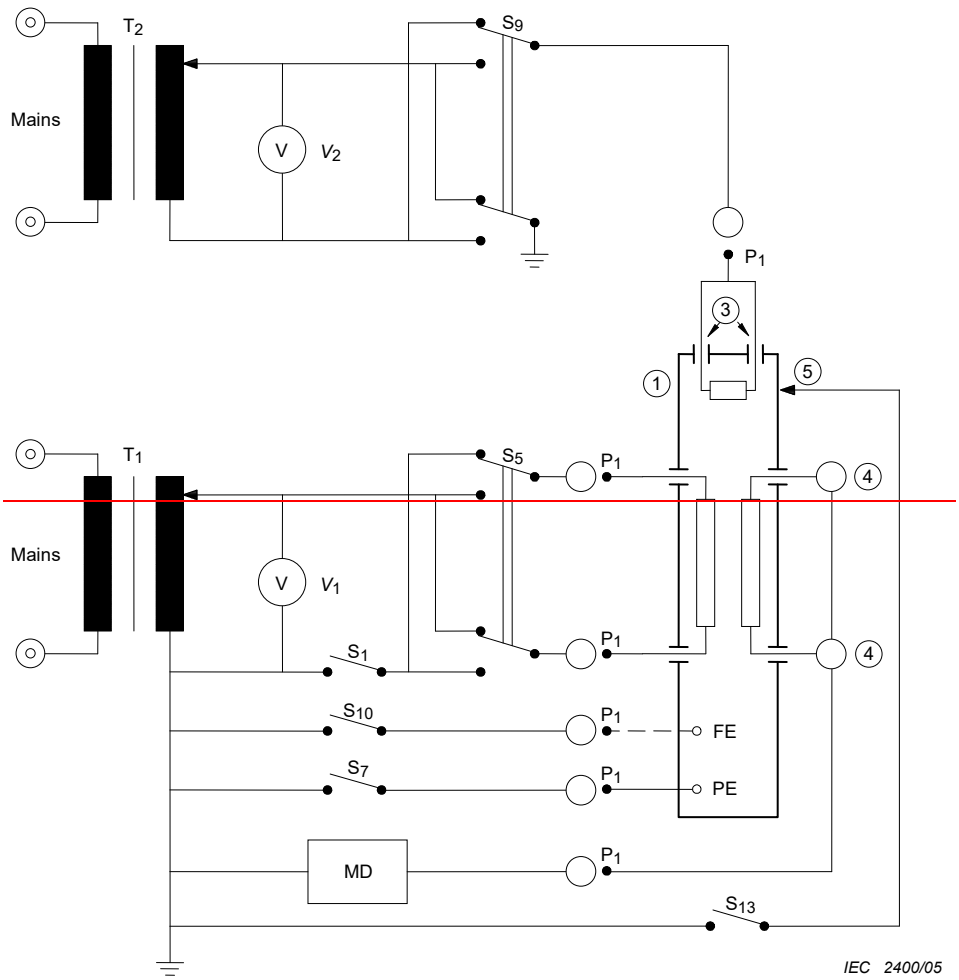

Copyright International Electrotechnical Commission
Provided by IHS Markit under license with IEC
No reproduction or networking permitted without license from IHS
Not for Resale, 08/26/2020 19:12:41 MDT

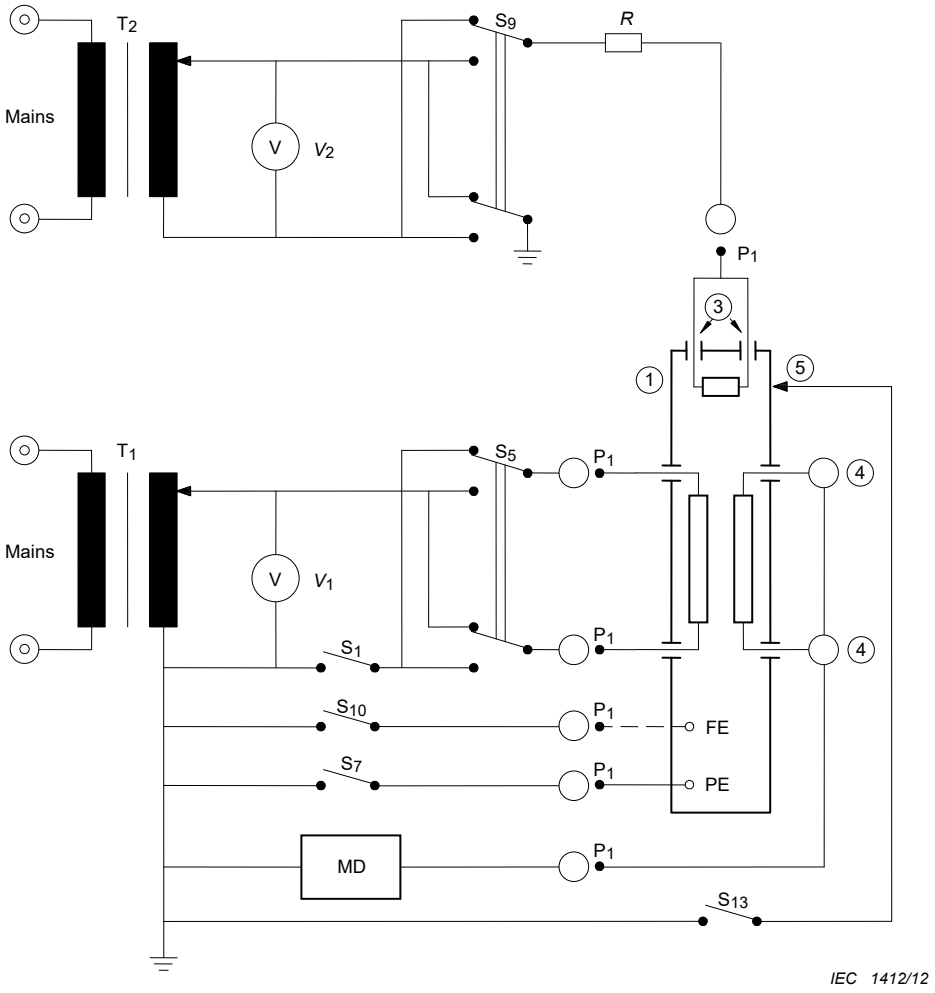

For legends, see Table 5.

Key

Measure (with S_7 closed, if CLASS I ME EQUIPMENT) under all possible combinations of positions of S_1, S_5, S_9, S_{10} and S_{13} (S_1 open is SINGLE FAULT CONDITION).

CLASS I ME EQUIPMENT only:
Measure with S_7 open (SINGLE FAULT CONDITION) and with S_1 closed under all possible combinations of S_5, S_9, S_{10} and S_{13}.

For CLASS II ME EQUIPMENT, the PROTECTIVE EARTH CONNECTION and S_7 are not used.

Example with the measuring supply circuit of Figure F.1.

Figure 17 – Measuring circuit for ~~the~~ PATIENT LEAKAGE CURRENT from PATIENT CONNECTION(S) to earth caused by an external voltage on a SIGNAL INPUT/OUTPUT PART
(see 8.7.4.7 c))

Copyright International Electrotechnical Commission
Provided by IHS Markit under license with IEC
No reproduction or networking permitted without license from IHS
Not for Resale, 08/26/2020 19:12:41 MDT

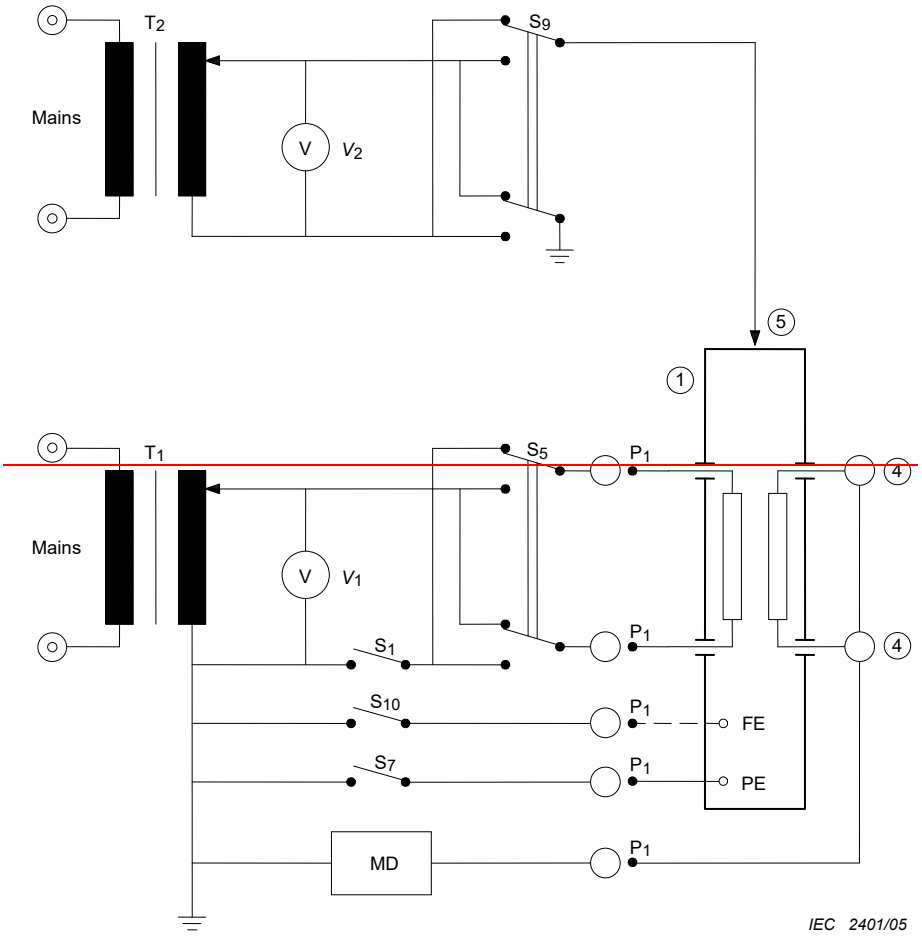

Copyright International Electrotechnical Commission
Provided by IHS Markit under license with IEC
No reproduction or networking permitted without license from IHS
Not for Resale, 08/26/2020 19:12:41 MDT

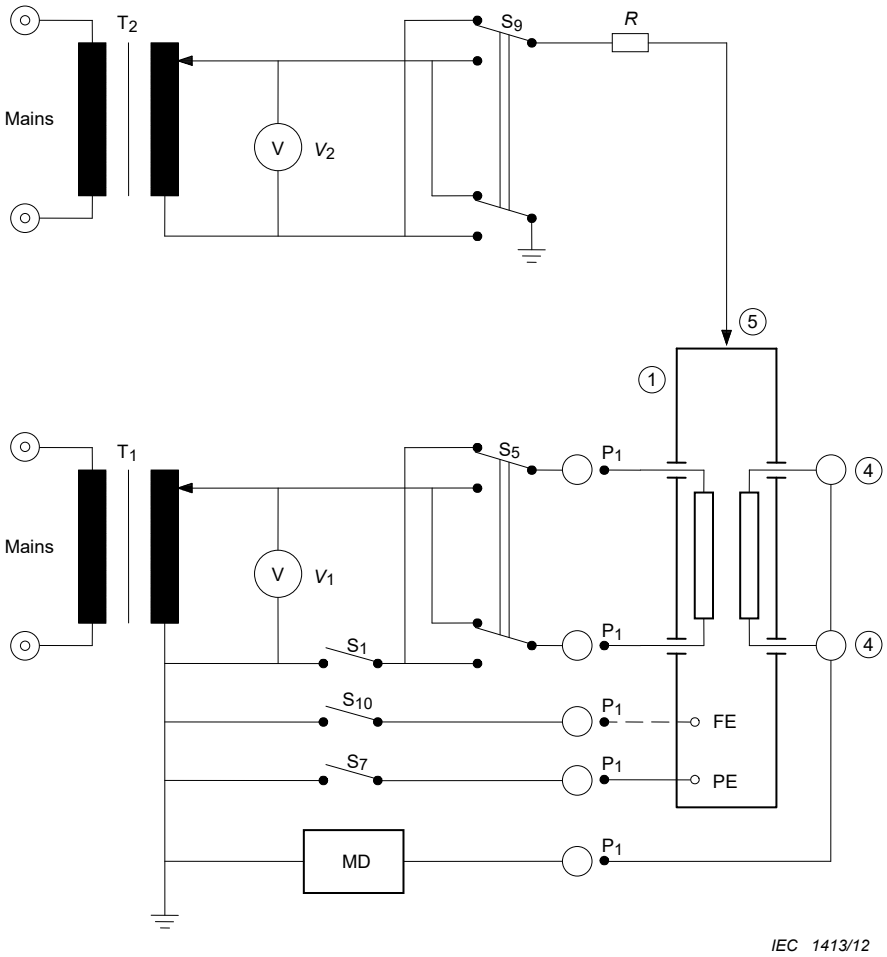

For legends, see Table 5.

Key

Measure with S_1 closed (and with S_7 closed, if CLASS I ME EQUIPMENT) under all possible combinations of positions of S_5, S_9 and S_{10}

For CLASS II ME EQUIPMENT, the PROTECTIVE EARTH CONNECTION and S_7 are not used.

Example with the measuring supply circuit of Figure F.1.

Figure 18 – Measuring circuit for ~~the~~ PATIENT LEAKAGE CURRENT from PATIENT CONNECTION(S) to earth caused by an external voltage on a metal ACCESSIBLE PART that is not PROTECTIVELY EARTHED
(see 8.7.4.7 d))

Copyright International Electrotechnical Commission
Provided by IHS Markit under license with IEC
No reproduction or networking permitted without license from IHS
Not for Resale, 08/26/2020 19:12:41 MDT

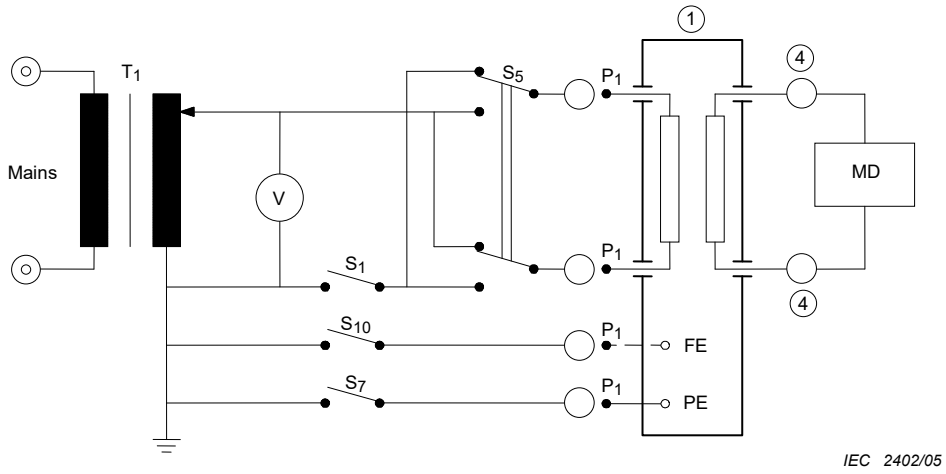

For legends, see Table 5.

Key

Measure (with S_7 closed if CLASS I ME EQUIPMENT) under all possible combinations of positions of S_1, S_5, and S_{10}.

S_1 open is a SINGLE FAULT CONDITION.

CLASS I ME EQUIPMENT only:
Measure with S_7 open (SINGLE FAULT CONDITION) and with S_1 closed under all possible combinations of positions of S_5, and S_{10}.

For CLASS II ME EQUIPMENT, the PROTECTIVE EARTH CONNECTION and S_7 are not used.

Example with the measuring supply circuit of Figure F.1.

Figure 19 – Measuring circuit for ~~the~~ PATIENT AUXILIARY CURRENT
(see 8.7.4.8)

Copyright International Electrotechnical Commission
Provided by IHS Markit under license with IEC
No reproduction or networking permitted without license from IHS
Not for Resale, 08/26/2020 19:12:41 MDT

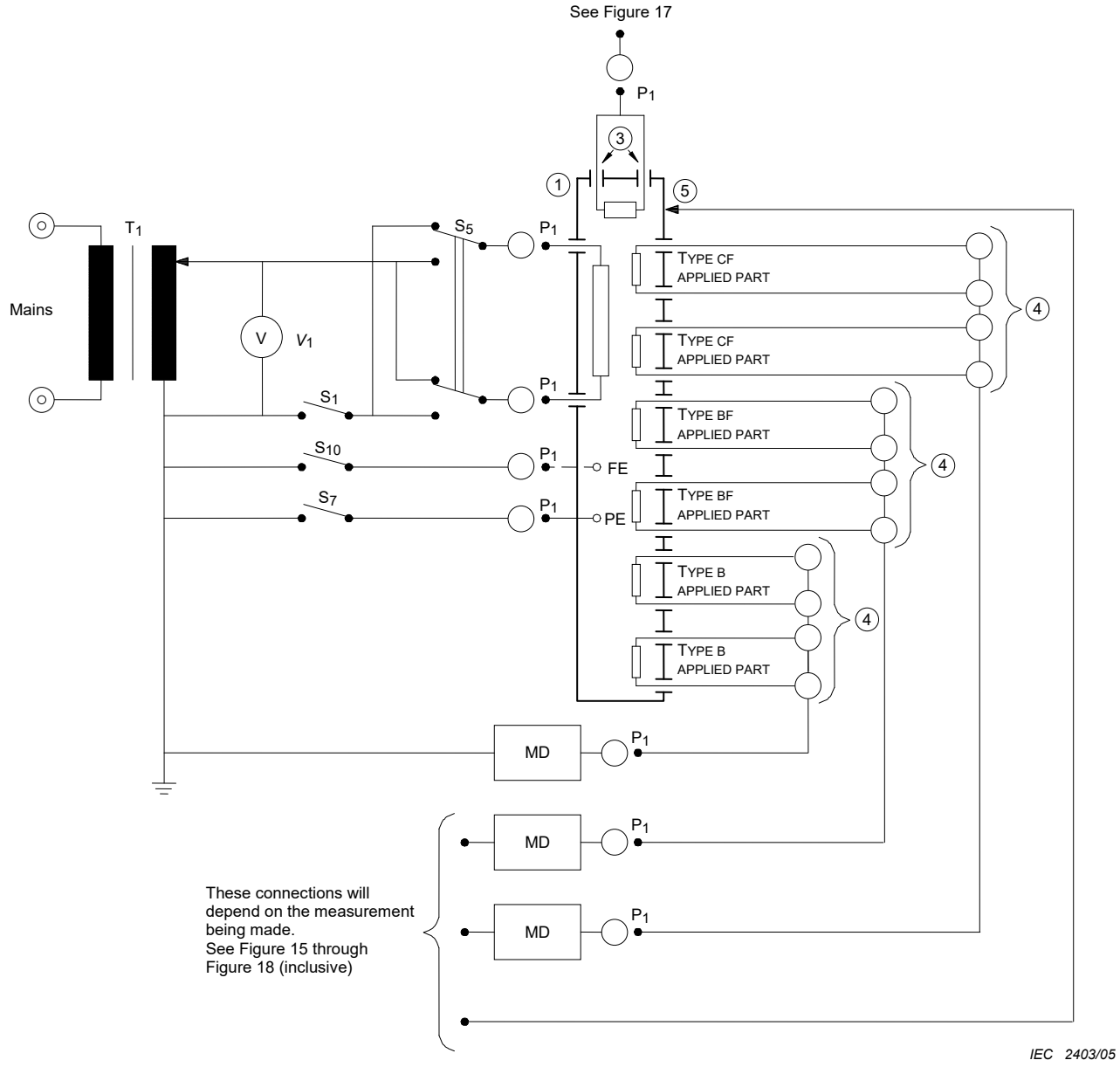

For legends, see Table 5.

Key

For the position of S_1, S_5, S_7 and S_{10}, see Figure 15, Figure 16, Figure 17 or Figure 18

Figure 20 – Measuring circuit for ~~the~~ total PATIENT LEAKAGE CURRENT with all PATIENT CONNECTIONS of all APPLIED PARTS of the same type (TYPE B APPLIED PARTS, TYPE BF APPLIED PARTS or TYPE CF APPLIED PARTS) connected together
(see 8.7.4.7 h))

Copyright International Electrotechnical Commission
Provided by IHS Markit under license with IEC
No reproduction or networking permitted without license from IHS
Not for Resale, 08/26/2020 19:12:41 MDT

Table 5 – Legends of symbols for Figure 9 to Figure 11, Figure 13 to Figure 20, Figure A.15, Annexes E and F

1	ME EQUIPMENT ENCLOSURE
2	Separate power supply unit or other electrical equipment in an ME SYSTEM that supplies power to the ME EQUIPMENT (see 5.5 ~~g~~ f) and Annex F)
3	SIGNAL INPUT/OUTPUT PART short circuited or loaded
4	PATIENT CONNECTIONS
5	Metal ACCESSIBLE PART not PROTECTIVELY EARTHED In case of a non-conductive ENCLOSURE and PATIENT LEAKAGE CURRENT measurement, connection is replaced by a metal foil of maximum 20 cm × 10 cm in intimate contact with the ENCLOSURE or relevant parts of the ENCLOSURE and connected to the reference earth
6	PATIENT circuit
7	Metal plate under a non-conductive ENCLOSURE with dimensions at least equal to the plan projection of the ENCLOSURE connected to the reference earth
T_1, T_2	Single- or polyphase isolation transformers with sufficient power rating and adjustable output voltage (See also the rationale for 8.7.4.2 and 8.7.4.3.)
$V_{(1,2,3)}$	Voltmeter indicating r.m.s. value, using, if relevant and possible, one meter with a commutator switch
S_1, S_2, S_3	Single-pole switches, simulating the interruption of a power supply conductor (SINGLE FAULT CONDITION) (See Annex F)
S_5, S_9	Commutator switches to reverse the polarity of the MAINS VOLTAGE
S_7	Single-pole switch, simulating the interruption of a single PROTECTIVE EARTH CONDUCTOR to the ME EQUIPMENT (SINGLE FAULT CONDITION)
S_8	Single pole switch simulating the interruption of a single PROTECTIVE EARTH CONDUCTOR to a separate power supply unit or other electrical equipment in an ME SYSTEM that supplies power to the ME EQUIPMENT (SINGLE FAULT CONDITION) (see Figure F.5)
S_{10}	Switch for connecting a FUNCTIONAL EARTH TERMINAL to the earthed point of the measuring supply system
S_{12}	Switch for connecting a PATIENT CONNECTION to the earthed point of the measuring supply circuit
S_{13}	Switch for connecting to earth a metal ACCESSIBLE PART not PROTECTIVELY EARTHED
S_{14}	Switch to connect/disconnect PATIENT CONNECTION to/from earth
S_{15}	Switch for connecting to earth a metal plate under a non-conductive ENCLOSURE
P_1	Sockets, plugs or terminals for the supply connection of the ME EQUIPMENT
P_2	Sockets, plugs or terminals for the connection to a separate power supply or other electrical equipment in an ME SYSTEM that supplies power to the ME EQUIPMENT (see Figure F.5)
MD	Measuring device (see Figure 12)
FE	FUNCTIONAL EARTH TERMINAL
PE	PROTECTIVE EARTH TERMINAL
R	Impedance to protect the circuitry and the person performing the test, but low enough to accept currents higher than the allowable values of the LEAKAGE CURRENT to be measured (optional)
- - - -	Optional connection
R	Reference earth (for LEAKAGE CURRENT and PATIENT AUXILLARY CURRENT measurements and for testing of DEFIBRILLATION-PROOF APPLIED PARTS, not connected to protective earth of the SUPPLY MAINS)
	SUPPLY MAINS voltage source

Copyright International Electrotechnical Commission
Provided by IHS Markit under license with IEC
No reproduction or networking permitted without license from IHS
Not for Resale, 08/26/2020 19:12:41 MDT

8.7.4.2 * Measuring supply circuits

~~*ME EQUIPMENT specified for connection to a SUPPLY MAINS is connected to an appropriate power source. For single-phase ME EQUIPMENT, the polarity of the supply is reversible and tests are conducted at both polarities. INTERNALLY POWERED ME EQUIPMENT is tested without any connection to a measuring supply circuit.*~~

~~NOTE Figure F.1 to Figure F.5 (inclusive) show some suitable arrangements but do not cover all possibilities, for example, delta-connected 3-phase supplies.~~

a) For ME EQUIPMENT specified for connection to a SUPPLY MAINS:

ME EQUIPMENT specified for connection to a SUPPLY MAINS is connected to an appropriate power source. For single-phase ME EQUIPMENT, the polarity of the supply is reversible and tests are conducted at both polarities.

NOTE 1 Figure F.1 to Figure F.5 (inclusive) show some suitable arrangements but do not cover all possibilities, for example, delta-connected 3-phase supplies. Refer to the IEC 60990 for additional types of arrangements.

b) For INTERNALLY POWERED ME EQUIPMENT:

INTERNALLY POWERED ME EQUIPMENT is tested without any connection to a measuring supply circuit.

NOTE 2 For INTERNALLY POWERED ME EQUIPMENT, Figure 14 to Figure 20 (inclusive) do not use the isolation transformers T_1 or switches S_1 and S_5. However, INTERNALLY POWERED ME EQUIPMENT that also has a means of connection to a SUPPLY MAINS shall also be tested according to a) above for that connection.

8.7.4.3 * Connection to the measuring supply circuit

a) *ME EQUIPMENT provided with a POWER SUPPLY CORD is tested using this cord.*

b) *ME EQUIPMENT provided with an APPLIANCE INLET is tested while connected to the measuring supply circuit via a DETACHABLE POWER SUPPLY CORD having a length of 3 m or a length and type specified in the instructions for use.*

c) *PERMANENTLY INSTALLED ME EQUIPMENT is tested while connected to the measuring supply circuit by the shortest possible connection.*

d) *Measuring arrangement*

1) *APPLIED PARTS, including PATIENT cables (when present), are placed on an insulating surface with a dielectric constant of approximately 1 (for example, expanded polystyrene) and approximately 200 mm above an earthed metal surface.*

NOTE 1 The measuring supply circuit and the measuring circuit should be positioned as far as possible away from unscreened power source leads. Placing the ME EQUIPMENT on or near a large earthed metal surface should be avoided.

NOTE 2 Where APPLIED PARTS are such that the test results can depend upon how they are placed on the insulating surface, the test is repeated as necessary to determine the worst possible positioning.

2) *If an isolating transformer is not used for LEAKAGE CURRENT measurements (e.g. when measuring LEAKAGE CURRENT for very high input power ME EQUIPMENT), the reference earth of the measuring circuits is connected to protective earth of the SUPPLY MAINS.*

8.7.4.4 Measuring device (MD)

a) *The measuring device loads the source of LEAKAGE CURRENT or PATIENT AUXILIARY CURRENT with a resistive impedance of approximately 1 000 Ω for d.c., a.c. and composite waveforms with frequencies up to and including 1 MHz.*

b) *The evaluation of current or current components according to 8.7.3 a) is obtained automatically if a measuring device according to Figure 12 a) or a similar circuit with the same frequency characteristic is used. This allows measurement of the total effect of all frequencies with a single instrument.*

Copyright International Electrotechnical Commission
Provided by IHS Markit under license with IEC
No reproduction or networking permitted without license from IHS
Not for Resale, 08/26/2020 19:12:41 MDT

If currents or current components with frequencies exceeding 1 kHz might exceed the 10 mA limit specified in 8.7.3 *e), these are measured by other appropriate means such as a 1 kΩ non-inductive resistor and suitable measuring instrument.*

c) *The voltage measuring instrument as shown in Figure 12 a) has an input resistance of at least 1 MΩ and input capacitance of no more than 150 pF. It indicates the true r.m.s. value of the voltage being d.c., a.c. or a composite waveform having components with frequencies from 0,1 Hz up to and including 1 MHz, with an indicating error not exceeding ± 5 % of the indicated value.*

The scale can indicate the current through the measuring device including automatic evaluation of components with frequencies above 1 kHz so as to enable direct comparison of the reading with the limit values specified in 8.7.3.

These requirements can be limited to a frequency range with an upper limit lower than 1 MHz if it can be proven (for example, by the use of an oscilloscope) that frequencies above such an upper limit do not occur in the measured current.

8.7.4.5 * Measurement of the EARTH LEAKAGE CURRENT and current in functional earth connection

a) *CLASS I ME EQUIPMENT is tested according to Figure 13. CLASS II ME EQUIPMENT with a functional earth connection according to 8.6.9 is tested as if it were CLASS I ME EQUIPMENT.*

b) *If ME EQUIPMENT has more than one PROTECTIVE EARTH CONDUCTOR (for example, one connected to the main ENCLOSURE and one to a separate power supply unit), then the current to be measured is the aggregate current that would flow into the protective earthing system of the installation.*

c) *For FIXED ME EQUIPMENT that can have connections to earth through the building structure, the MANUFACTURER specifies a suitable test PROCEDURE and configuration for measurement of EARTH LEAKAGE CURRENT.*

8.7.4.6 * Measurement of the TOUCH CURRENT

a) *ME EQUIPMENT is tested according to Figure 14, using an appropriate measuring supply circuit.*

Measure with MD between earth and each part of the ENCLOSURE(S) that is not PROTECTIVELY EARTHED.

Measure with MD between parts of the ENCLOSURE(S) that are not PROTECTIVELY EARTHED.

In the SINGLE FAULT CONDITION of interruption of any one PROTECTIVE EARTH CONDUCTOR (when applicable, see 8.1 b)), measure with MD between earth and any part of the ENCLOSURE(S) that is normally PROTECTIVELY EARTHED.

NOTE It is not necessary to make separate measurements from more than one part that is PROTECTIVELY EARTHED.

INTERNALLY POWERED ME EQUIPMENT is investigated for TOUCH CURRENT but only between parts of the ENCLOSURE, not between the ENCLOSURE and earth unless 8.7.4.6 c) applies.

b) *If ME EQUIPMENT has an ENCLOSURE or a part of the ENCLOSURE made of insulating material, metal foil of maximum 20 cm x 10 cm is applied in intimate contact with the ENCLOSURE or relevant part of the ENCLOSURE.*

The metal foil is shifted, if possible, to determine the highest value of the TOUCH CURRENT. The metal foil should not touch any metal parts of the ENCLOSURE that are possibly PROTECTIVELY EARTHED; however, metal parts of the ENCLOSURE that are not PROTECTIVELY EARTHED can be covered partly or totally by the metal foil.

Copyright International Electrotechnical Commission
Provided by IHS Markit under license with IEC
No reproduction or networking permitted without license from IHS Not for Resale, 08/26/2020 19:12:41 MDT

Where it is intended to measure the TOUCH CURRENT in the SINGLE FAULT CONDITION of interruption of a PROTECTIVE EARTH CONDUCTOR, the metal foil is arranged to contact parts of the ENCLOSURE that are normally PROTECTIVELY EARTHED.

Where the surface of the ENCLOSURE contacted by the PATIENT or OPERATOR is larger than 20 cm x 10 cm, the size of the foil is increased corresponding to the area of contact.

c) *ME EQUIPMENT with a SIGNAL INPUT/OUTPUT PART is, when required (see 8.1 a)), additionally tested using transformer T_2.*

The value of the voltage set at the transformer T_2 is equal to 110 % of the MAXIMUM MAINS VOLTAGE. The specific pin configuration used when applying the external voltage is determined to be worst case based on testing or circuit analysis.

8.7.4.7 Measurement of the PATIENT LEAKAGE CURRENT

See Annex K, which contains simplified PATIENT LEAKAGE CURRENT diagrams, for supplemental explanatory detail.

a) *ME EQUIPMENT with an APPLIED PART is tested according to Figure 15.*

An ENCLOSURE, other than an APPLIED PART, made of insulating material is placed in any position of NORMAL USE upon a flat metal surface connected to earth with dimensions at least equal to the plan-projection of the ENCLOSURE.

b) * *ME EQUIPMENT with an F-TYPE APPLIED PART is additionally tested according to Figure 16.*

SIGNAL INPUT/OUTPUT PARTS are connected to earth, if not already permanently earthed in the ME EQUIPMENT.

The value of the voltage to be set at the transformer T_2 in Figure 16 is equal to 110 % of the MAXIMUM MAINS VOLTAGE.

For this measurement, non-PROTECTIVELY EARTHED metal ACCESSIBLE PARTS including PATIENT CONECTIONS of other APPLIED PARTS (if present) are connected to earth.

c) * *ME EQUIPMENT with an APPLIED PART and a SIGNAL INPUT/OUTPUT PART is, when required (see 8.1 a)), additionally tested according to Figure 17.*

The value of the voltage set at the transformer T_2 is equal to 110 % of the MAXIMUM MAINS VOLTAGE. The specific pin configuration used when applying the external voltage is to be worst case based on testing or circuit analysis.

d) * *ME EQUIPMENT with a PATIENT CONNECTION of a TYPE B APPLIED PART that is not PROTECTIVELY EARTHED or a TYPE BF APPLIED PART and with metal ACCESSIBLE PARTS that are not PROTECTIVELY EARTHED is additionally tested according to Figure 18.*

The value of the voltage set at the transformer T_2 is equal to 110 % of the MAXIMUM MAINS VOLTAGE.

This test need not be conducted if it can be demonstrated that there is adequate separation of the parts involved or if the RISK is acceptably low according to 8.5.2.2.

e) *An APPLIED PART consisting of a surface made of insulating material is tested using metal foil as mentioned under 8.7.4.6. Alternatively a 0,9 % saline solution is used in which the APPLIED PART is immersed.*

Where the surface of the APPLIED PART intended to contact the PATIENT is considerably larger than that of a foil of 20 cm x 10 cm, the size of the foil is increased to correspond to the area of contact.

Copyright International Electrotechnical Commission
Provided by IHS Markit under license with IEC
No reproduction or networking permitted without license from IHS Not for Resale, 08/26/2020 19:12:41 MDT

Such metal foil or saline solution is considered as the only PATIENT CONNECTION for the APPLIED PART concerned.

f) *Where the PATIENT CONNECTION is formed by a fluid which contacts the PATIENT, the fluid is replaced by 0,9 % saline solution, an electrode is placed in the saline solution and this electrode is considered as the PATIENT CONNECTION for the APPLIED PART concerned.*

g) *The PATIENT LEAKAGE CURRENT is measured (see also Annex E):*

~~– for TYPE B APPLIED PARTS and TYPE BF APPLIED PARTS, from and to all PATIENT CONNECTIONS of a single function either connected directly together or loaded as in NORMAL USE;~~

– *for TYPE B APPLIED PARTS, from all PATIENT CONNECTIONS connected directly together.*

– *for TYPE BF APPLIED PARTS, from and to all PATIENT CONNECTIONS of a single function either connected directly together or loaded as in NORMAL USE.*

– *~~in~~ for TYPE CF APPLIED PARTS, from and to every PATIENT CONNECTION in turn.*

If the instructions for use specifies alternatives for a detachable part of the APPLIED PART (for example, PATIENT leads or PATIENT cables and electrodes), the PATIENT LEAKAGE CURRENT measurements are made with the least favourable specified detachable part. See also 7.9.2.14.

h) * *The total PATIENT LEAKAGE CURRENT is measured from and to all PATIENT CONNECTIONS of all APPLIED PARTS of the same type (TYPE B APPLIED PARTS, TYPE BF APPLIED PARTS or TYPE CF APPLIED PARTS) connected together. See Figure 20. If necessary, a functional earth may be disconnected before conducting this test.*

NOTE Measurement of total PATIENT LEAKAGE CURRENT of TYPE B APPLIED PARTS is only necessary if there are two or more PATIENT CONNECTION that belong to different functions and that are not electrically connected directly together.

i) *If the PATIENT CONNECTIONS of the APPLIED PART are loaded in NORMAL USE, the measuring device is connected to each PATIENT CONNECTION in turn.*

8.7.4.8 Measurement of the PATIENT AUXILIARY CURRENT

ME EQUIPMENT with an APPLIED PART is tested according to Figure 19, using an appropriate measuring supply circuit unless the ME EQUIPMENT has only a single PATIENT CONNECTION.

The PATIENT AUXILIARY CURRENT is measured between any single PATIENT CONNECTION and all other PATIENT CONNECTIONS, either connected directly together or loaded as in NORMAL USE (see also Annex E).

8.7.4.9 * ME EQUIPMENT with multiple PATIENT CONNECTIONS

ME EQUIPMENT with multiple PATIENT CONNECTIONS is investigated to ensure that the PATIENT LEAKAGE CURRENT and the PATIENT AUXILIARY CURRENT do not exceed the allowable values for NORMAL CONDITION while one or more PATIENT CONNECTIONS are:

– disconnected from the PATIENT; and

– disconnected from the PATIENT and earthed.

Testing is performed if an examination of the ME EQUIPMENT circuit indicates that the PATIENT LEAKAGE CURRENT or the PATIENT AUXILIARY CURRENT can increase to excessive levels under the above conditions. Actual measurements should be limited to a representative number of combinations.

8.8 Insulation

8.8.1 * General

~~Only the following insulation shall be subject to testing:~~

Copyright International Electrotechnical Commission
Provided by IHS Markit under license with IEC
No reproduction or networking permitted without license from IHS
Not for Resale, 08/26/2020 19:12:41 MDT

~~– insulation that is relied upon as a MEANS OF PROTECTION, including REINFORCED INSULATION;~~

~~– insulation between parts of opposite polarity of the MAINS PART on the SUPPLY MAINS side of any mains fuse or OVER-CURRENT RELEASE, which shall be tested as one MEANS OF PROTECTION.~~

Only insulation that is relied upon as a MEANS OF PROTECTION, including REINFORCED INSULATION, shall be subject to testing.

Insulation forming part of a component is exempt provided that the component complies with 4.8.

Insulation forming MEANS OF OPERATOR PROTECTION is exempt from the tests of 8.8 if it complies with the requirements and tests of IEC 60950-1:2005, IEC 60950-1:2005/AMD1:2009 and IEC 60950-1:2005/AMD2:2013 or IEC 62368-1 for INSULATION CO-ORDINATION.

8.8.2 * Distance through solid insulation or use of thin sheet material

Solid insulation which forms SUPPLEMENTARY INSULATION or REINFORCED INSULATION for a PEAK WORKING VOLTAGE greater than 71 V shall either:

a) have a distance through insulation of at least 0,4 mm, or

b) not form part of an ENCLOSURE and not be subject to handling or abrasion during NORMAL USE, and comprise:
   - at least two layers of material, each of which will pass the appropriate dielectric strength test; or
   - three layers of material, for which all combinations of two layers together will pass the appropriate dielectric strength test.

The appropriate dielectric strength test for the one or two layers is the test for one MEANS OF PROTECTION in the case of SUPPLEMENTARY INSULATION or the test for two MEANS OF PROTECTION in the case of REINFORCED INSULATION, respectively.

NOTE 1 There is no minimum thickness requirement for BASIC INSULATION, nor for insulation operating at WORKING VOLTAGE up to 71 V.

NOTE 2 There is no requirement for all layers of insulation to be of the same material.

Compliance is checked by inspection, by measurement of thickness and by the dielectric strength test of 8.8.3.

For wound components, where BASIC INSULATION, SUPPLEMENTARY INSULATION or REINFORCED INSULATION is required between windings, they shall be separated by interleaved insulation complying with a) or b) immediately above, or both, unless one of the following wire constructions is used:

c) wire that has solid insulation, other than solvent based enamel, complying with a) above;

d) wire that has multi-layer extruded or spirally wrapped insulation (where the layers can be individually tested for dielectric strength) complying with b) above and passes the tests of Annex L;

e) wire that has multi-layer extruded or spirally wrapped insulation (where only the finished wire can be tested) and passes the tests of Annex L. The minimum number of constructional layers applied to the conductor shall be as follows:
   - BASIC INSULATION: two wrapped layers or one extruded layer;
   - SUPPLEMENTARY INSULATION: two layers, wrapped or extruded;
   - REINFORCED INSULATION: three layers, wrapped or extruded.

Copyright International Electrotechnical Commission
Provided by IHS Markit under license with IEC
No reproduction or networking permitted without license from IHS
Not for Resale, 08/26/2020 19:12:41 MDT

In both d) and e), for spirally wrapped insulation where the CREEPAGE DISTANCES between layers, as wrapped, are less than those given in Table 12 or Table 16 (for Pollution Degree 1) depending on the type of insulation in question, the path between layers shall be sealed as for a cemented joint in 8.9.3.3 and the test voltages of the TYPE TESTS in L.3 are increased to 1,6 times their normal values.

NOTE 3 One layer of material wound with more than 50 % overlap is considered to constitute two layers.

Where two insulated wires or one bare and one insulated wire are in contact inside the wound component, crossing each other at an angle between 45° and 90° and subject to winding tension, protection against mechanical stress shall be provided. This protection can be achieved, for example, by providing physical separation in the form of insulating sleeving or sheet material, or by using double the required number of insulation layers.

The finished component shall pass routine tests for dielectric strength using the appropriate test voltages in 8.8.3.

Compliance is checked by inspection and measurement and, if applicable, as specified in Annex L. However, the tests of Annex L are not repeated if the material data sheets confirm compliance.

8.8.3 * Dielectric strength

The dielectric strength of solid electrical insulation of ME EQUIPMENT shall be capable of withstanding the test voltages as specified in Table 6. Only insulation with a safety function need be subject to testing (see 8.8.1).

Compliance is checked by applying the test voltage specified in Table 6 for 1 min:

– *immediately after the humidity preconditioning treatment (as described in 5.7) with the ME EQUIPMENT de-energized during the test, and*

– *after any required sterilization PROCEDURE (see 11.6.7, 7.9.2.12 and the instructions for use) with the ME EQUIPMENT de-energized, and*

– *after reaching a temperature equivalent to the steady state operating temperature reached during the heating test of 11.1.1.*

Initially, not more than half the test voltage is applied, and then it is gradually raised over a period of 10 s to the full value, which is maintained for 1 min, after which it is gradually lowered over a period of 10 s to less than half the full value.

The test conditions are as follows:

a) * *The test voltage has a waveform and frequency such that the dielectric stress on the insulation is at least equal to that occurring in NORMAL USE. The waveform and frequency of the test voltage can differ from the voltage applied in NORMAL USE if it can be demonstrated that the dielectric stress on the insulation tested will not be diminished.*

Where the voltage to which the relevant insulation is subjected in NORMAL USE is non-sinusoidal a.c., the test may be performed using a sinusoidal 50 Hz or 60 Hz test voltage.

Alternatively, a d.c. test voltage equal to the peak value of the a.c. test voltage may be used.

The test voltage, for the WORKING VOLTAGE to which the insulation is subjected is greater than or equal to the value specified in Table 6.

b) *During the test, breakdown constitutes a failure. Insulation breakdown is considered to have occurred when the current which flows as a result of the application of the test voltage rapidly increases in an uncontrolled manner, that is, the insulation does not restrict the flow of the current. Corona discharge or a single momentary flashover is not regarded as insulation breakdown.*

Copyright International Electrotechnical Commission
Provided by IHS Markit under license with IEC
No reproduction or networking permitted without license from IHS Not for Resale, 08/26/2020 19:12:41 MDT

c) *If it is not possible to test individual solid insulations, it is then necessary to test a large part of the ME EQUIPMENT or even the whole ME EQUIPMENT. In this case, it is important not to overstress different types and levels of insulation and the following must be taken into account.*

- *Where an ENCLOSURE or part of ENCLOSURE consists of non-conductive surfaces, metal foil is applied. Care is taken that the metal foil is positioned in such a manner that flashover does not occur at the edges of insulation linings. If applicable, the metal foil is moved so as to test all parts of the surface.*
- *The circuits on either side of the insulation under test should be connected or short circuited such that components within these circuits do not get stressed during the test. For example, the terminals of the MAINS PART, the SIGNAL INPUT/OUTPUT PART and the PATIENT CONNECTION(S) (if applicable) respectively are short circuited during the test.*
- *Where there are capacitors across the insulation under test (e.g. radio-frequency filter capacitors), they may be disconnected during the test, if they are certified to IEC 60384-14.*

--`,,```,,,,````-`-`,,`,,`,`,,`---
Copyright International Electrotechnical Commission
Provided by IHS Markit under license with IEC
No reproduction or networking permitted without license from IHS
Not for Resale, 08/26/2020 19:12:41 MDT

Table 6 – Test voltages for solid insulation forming a MEANS OF PROTECTION

PEAK WORKING VOLTAGE (*U*) V peak	PEAK WORKING VOLTAGE (*U*) V d.c.	A.C. test voltages in V r.m.s.							
		MEANS OF OPERATOR PROTECTION				MEANS OF PATIENT PROTECTION			
		Protection from MAINS PART		Protection from SECONDARY CIRCUITS		Protection from MAINS PART		Protection from SECONDARY CIRCUITS	
		One MOOP	Two MOOP	One MOOP	Two MOOP	One MOPP	Two MOPP	One MOPP	Two MOPP
U < 42,4	*U* < *60*	1 000	2 000	No test	No test	1 500	3 000	500	1 000
42,4 < *U* ≤ 71	60 < *U* ≤ 71	1 000	2 000	See Table 7	See Table 7	1 500	3 000	750	1 500
71 < *U* ≤ 184	71 < *U* ≤ 184	1 000	2 000	See Table 7	See Table 7	1 500	3 000	1 000	2 000
184 < *U* ≤ 212	184 < *U* ≤ 212	1 500	3 000	See Table 7	See Table 7	1 500	3 000	1 000	2 000
212 < *U* ≤ 354	212 < *U* ≤ 354	1 500	3 000	See Table 7	See Table 7	1 500	4 000	1 500	3 000
354 < *U* ≤ 848	354 < *U* ≤ 848	See Table 7	3 000	See Table 7	See Table 7	√2*U* + 1 000	2 x (√2*U* + 1 500)	√2*U* + 1 000	2 x (√2*U* + 1 500)
848 < *U* ≤ 1 414	848 < *U* ≤ 1 414	See Table 7	3 000	See Table 7	See Table 7	√2*U* + 1 000	2 x (√2*U* + 1 500)	√2*U* + 1 000	2 x (√2*U* + 1 500)
1 414 < *U* ≤ 10 000	1 414 < *U* ≤ 10 000	See Table 7	See Table 7	See Table 7	See Table 7	*U*/√2 + 2 000	√2*U* + 5 000	*U*/√2 + 2 000	√2*U* + 5 000
10 000 < *U* ≤ 14 140	10 000 < *U* ≤ 14 140	~~1,06 x *U*/√2~~ 1,06 x *U*	~~1,06 x *U*/√2~~ 1,06 x *U*	~~1,06 x *U*/√2~~ 1,06 x *U*	~~1,06 x *U*/√2~~ 1,06 x *U*	*U*/√2 + 2 000	√2*U* + 5 000	*U*/√2 + 2 000	√2*U* + 5 000
U > 14 140	*U* > 14 140	If necessary, to be prescribed by particular standards							

NOTE 1 For a barrier according to:

- Figure J.6, use the column MEANS OF PATIENT PROTECTION – Protection from SECONDARY CIRCUITS – Two MOPP.
- 8.5.2.1 and Figure J.7, use the column MEANS OF PATIENT PROTECTION – Protection from MAINS PART – One MOPP.

NOTE 2 See the rationale for 8.8.3.

NOTE 3 Insulation meeting the requirements for the test voltage for reinforced insulation for a nominal mains system voltage up to and including 250 V r.m.s according to IEC 62368-1:2018, Table 27 meets the requirements for 1 MOPP according to this table for a peak WORKING VOLTAGE up to 1 293 V. At higher WORKING VOLTAGES the insulation does not necessarily provide 1 MOPP.

Insulation meeting the requirements for the test voltage for reinforced insulation for a nominal mains system voltage above 250 V r.m.s. up to and including 600 V r.m.s. according to IEC 62368-1:2018, Table 27 meets the requirements for 1 MOPP according to this table for a peak WORKING VOLTAGE up to 2 172 V. At higher WORKING VOLTAGES the insulation does not necessarily provide 1 MOPP.

Copyright International Electrotechnical Commission
Provided by IHS Markit under license with IEC
No reproduction or networking permitted without license from IHS
Not for Resale, 08/26/2020 19:12:41 MDT

Table 7 – Test voltages for MEANS OF OPERATOR PROTECTION

Test voltage in V r.m.s.

PEAK WORKING VOLTAGE (*U*) V peak or V d.c.	One MOOP	Two MOOP	PEAK WORKING VOLTAGE (*U*) V peak or V d.c.	One MOOP	Two MOOP	PEAK WORKING VOLTAGE (*U*) V peak or V d.c.	One MOOP	Two MOOP
34	500	800	250	1 261	2 018	1 750	3 257	3 257
35	507	811	260	1 285	2 055	1 800	3 320	3 320
36	513	821	270	1 307	2 092	1 900	3 444	3 444
38	526	842	280	1 330	2 127	2 000	3 566	3 566
40	539	863	290	1 351	2 162	2 100	3 685	3 685
42	551	882	300	1 373	2 196	2 200	3 803	3 803
44	564	902	310	1 394	2 230	2 300	3 920	3 920
46	575	920	320	1 414	2 263	2 400	4 034	4 034
48	587	939	330	1 435	2 296	2 500	4 147	4 147
50	598	957	340	1 455	2 328	2 600	4 259	4 259
52	609	974	350	1 474	2 359	2 700	4 369	4 369
54	620	991	360	1 494	2 390	2 800	4 478	4 478
56	630	1 008	380	1 532	2 451	2 900	4 586	4 586
58	641	1 025	400	1 569	2 510	3 000	4 693	4 693
60	651	1 041	420	1 605	2 567	3 100	4 798	4 798
62	661	1 057	440	1 640	2 623	3 200	4 902	4 902
64	670	1 073	460	1 674	2 678	3 300	5 006	5 006
66	680	1 088	480	1 707	2 731	3 400	5 108	5 108
68	690	1 103	500	1 740	2 784	3 500	5 209	5 209
70	699	1 118	520	1 772	2 835	3 600	5 309	5 309
72	708	1 133	540	1 803	2 885	3 800	5 507	5 507
74	717	1 147	560	1 834	2 934	4 000	5 702	5 702
76	726	1 162	580	1 864	2 982	4 200	5 894	5 894
78	735	1 176	588	1 875	3 000	4 400	6 082	6 082
80	744	1 190	600	1 893	3 000	4 600	6 268	6 268
85	765	1 224	620	1 922	3 000	4 800	6 452	6 452
90	785	1 257	640	1 951	3 000	5 000	6 633	6 633
95	805	1 288	660	1 979	3 000	5 200	6 811	6 811
100	825	1 319	680	2 006	3 000	5 400	6 987	6 987
105	844	1 350	700	2 034	3 000	5 600	7 162	7 162
110	862	1 379	720	2 060	3 000	5 800	7 334	7 334
115	880	1 408	740	2 087	3 000	6 000	7 504	7 504
120	897	1 436	760	2 113	3 000	6 200	7 673	7 673
125	915	1 463	780	2 138	3 000	6 400	7 840	7 840
130	931	1 490	800	2 164	3 000	6 600	8 005	8 005
135	948	1 517	850	2 225	3 000	6 800	8 168	8 168
140	964	1 542	900	2 285	3 000	7 000	8 330	8 330
145	980	1 568	950	2 343	3 000	7 200	8 491	8 491
150	995	1 593	1 000	2 399	3 000	7 400	8 650	8 650
152	1 000	1 600	1 050	2 454	3 000	7 600	8 807	8 807
155	1 000	1 617	1 100	2 508	3 000	7 800	8 964	8 964
160	1 000	1 641	1 150	2 560	3 000	8 000	9 119	9 119
165	1 000	1 664	1 200	2 611	3 000	8 200	9 273	9 273
170	1 000	1 688	1 250	2 661	3 000	8 400	9 425	9 425
175	1 000	1 711	1 300	2 710	3 000	8 600	9 577	9 577
180	1 000	1 733	1 350	2 758	3 000	8 800	9 727	9 727
184	1 000	1 751	1 400	2 805	3 000	9 000	9 876	9 876
185	1 097	1 755	1 410	2 814	3 000	9 200	10 024	10 024
190	1 111	1 777	1 450	2 868	3 000	9 400	10 171	10 171
200	1 137	1 820	1 500	2 934	3 000	9 600	10 317	10 317
210	1 163	1 861	1 550	3 000	3 000	9 800	10 463	10 463
220	1 189	1 902	1 600	3 065	3 065	10 000	10 607	10 607
230	1 214	1 942	1 650	3 130	3 130			
240	1 238	1 980	1 700	3 194	3 194			

Copyright International Electrotechnical Commission
Provided by IHS Markit under license with IEC
No reproduction or networking permitted without license from IHS
Not for Resale, 08/26/2020 19:12:41 MDT

8.8.4 Insulation other than wire insulation

8.8.4.1 * Mechanical strength and resistance to heat

The resistance to heat shall be retained by all types of insulation, including insulating partition walls, during the EXPECTED SERVICE LIFE of the ME EQUIPMENT.

Compliance is checked by inspection of the ME EQUIPMENT and the design documentation, and, if necessary, inspection of the RISK MANAGEMENT FILE ~~and, if necessary,~~ in conjunction with the following tests:

– *resistance to moisture, etc. (see 11.6);*

– *dielectric strength (see 8.8.3);*

– *mechanical strength (see 15.3).*

Resistance to heat is established by the following tests, which need not be performed if satisfactory evidence of compliance is provided.

a) *For parts of the ENCLOSURE and other external insulating parts, the deterioration of which could result in an unacceptable RISK, by the ball-pressure test:*

ENCLOSURES and other external parts of insulating material, except the insulation of flexible cords and parts of ceramic material, are subjected to a ball-pressure test using the test apparatus shown in Figure 21. The surface of the part to be tested is placed in the horizontal position and a steel ball of 5 mm diameter is pressed against the surface with a force of 20 N. The test is performed in a heating cabinet at a temperature of 75 °C ± 2 °C or the ambient temperature indicated in the technical description (see 7.9.3.1) ± 2 °C plus the temperature rise of the relevant part of insulating material measured during the test of 11.1, whichever is the higher.

The ball is withdrawn after 1 h and the diameter of the impression made by the ball is measured. An impression greater than 2 mm in diameter constitutes a failure.

b) *For parts of insulating material that support uninsulated parts of the MAINS PART, the deterioration of which could influence the safety of the ME EQUIPMENT, by the ball-pressure test:*

A test is performed as described in a) above, but at a temperature of 125 °C ± 2 °C or at the ambient temperature indicated in the technical description (see 7.9.3.1) ± 2 °C plus the temperature rise that was determined during the test of 11.1 of the relevant part, whichever is the higher.

The test is not performed on parts of ceramic material, insulating parts of commutators, brush-caps and the like, and on coil formers not used as REINFORCED INSULATION.

NOTE For SUPPLEMENTARY INSULATION and REINFORCED INSULATION of thermoplastic materials, see also 13.1.2.

8.8.4.2 Resistance to environmental stress

The insulating characteristics and mechanical strength of any MEANS OF PROTECTION shall be so designed or protected that it is not likely to be impaired by environmental stresses including deposition of dirt or by dust resulting from wear of parts within the ME EQUIPMENT to such an extent that CREEPAGE DISTANCES and AIR CLEARANCES are reduced below the values specified in 8.9.

Ceramic material not tightly sintered, and the like, and beads alone shall not be used as SUPPLEMENTARY INSULATION or REINFORCED INSULATION.

Insulating material in which heating conductors are embedded may be considered as one MEANS OF PROTECTION but shall not be used as two MEANS OF PROTECTION.

--`,```,,,,;,,`,`,,`,,,,,,,,,```-`-`,,`,,`,`,,`---
Copyright International Electrotechnical Commission
Provided by IHS Markit under license with IEC
No reproduction or networking permitted without license from IHS
Not for Resale, 08/26/2020 19:12:41 MDT

Compliance is checked by inspection, by measurement and for natural latex rubber by the following test:

Parts of natural latex rubber are aged in an atmosphere of oxygen under pressure. The samples are suspended freely in an oxygen cylinder, the effective capacity of the cylinder is at least 10 times the volume of the samples. The cylinder is filled with commercial oxygen not less than 97 % pure, to a pressure of 2,1 MPa ± 70 kPa.

The samples are kept in the cylinder at a temperature of 70 °C ± 2 °C for 96 h. Immediately afterwards, they are taken out of the cylinder and left at room temperature for at least 16 h. After the test, the samples are examined. Cracks visible to the naked eye constitute a failure.

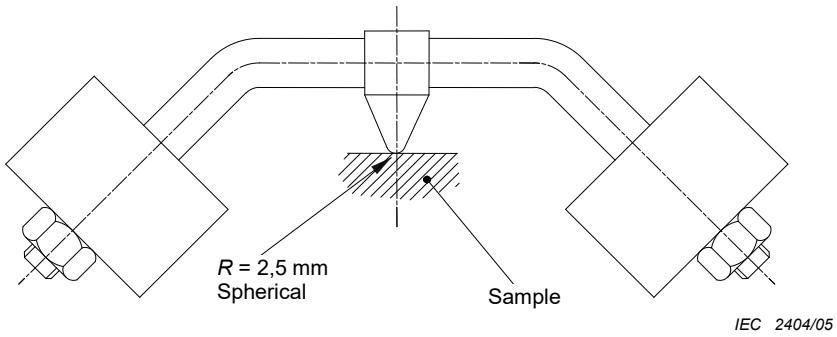

Figure 21 – Ball-pressure test apparatus
(see 8.8.4.1)

8.9 * CREEPAGE DISTANCES and AIR CLEARANCES

8.9.1 * Values

8.9.1.1 General

CREEPAGE DISTANCES and AIR CLEARANCES of ME EQUIPMENT shall be equal to or greater than the values of ~~Table 11 to Table 16 (inclusive) except as specified in 8.9.1.2 to 8.9.1.15. See also 8.9.2 to 8.9.4.~~:

– for insulation between parts of opposite polarity of the MAINS PART on the SUPPLY MAINS side of any mains fuse or OVER-CURRENT RELEASE, one MEANS OF OPERATOR PROTECTION in accordance with Table 13, Table 14 and Table 16; and

– for insulation providing at least a MEANS OF PROTECTION, in accordance with Table 12 to Table 16 (inclusive) except as specified in 8.9.1.2 to 8.9.1.15. See also 8.9.2 to 8.9.4.

8.9.1.2 * CREEPAGE DISTANCES and AIR CLEARANCES complying with IEC 60950-1 or IEC 62368-1

Except as noted below, the values of Table ~~11~~ 12 to Table 16 (inclusive) do not apply to CREEPAGE DISTANCES and AIR CLEARANCES forming MEANS OF OPERATOR PROTECTION that comply with the requirements of IEC 60950-1:2005, IEC 60950-1:2005/AMD1:2009 and IEC 60950-1:2005/AMD2:2013 or IEC 62368-1:2018 for INSULATION CO-ORDINATION and are used in the conditions (e.g. overvoltage category, pollution degree) under which compliance was tested.

Equipment/sub-assemblies/components complying with IEC 62368-1:2018 designed specifically for use with transient-free supply mains shall additionally comply with the applicable requirements of Table 13 to Table 16 (inclusive).

Copyright International Electrotechnical Commission
Provided by IHS Markit under license with IEC
No reproduction or networking permitted without license from IHS
Not for Resale, 08/26/2020 19:12:41 MDT

8.9.1.3 CREEPAGE DISTANCES across glass, mica, ceramic and similar materials

For CREEPAGE DISTANCES across glass, mica, ceramic and other inorganic insulating materials with similar tracking characteristics, the specified minimum value of AIR CLEARANCE shall be applied as the minimum CREEPAGE DISTANCE.

8.9.1.4 Minimum CREEPAGE DISTANCE

If the minimum CREEPAGE DISTANCE derived from Table ~~11~~ 12 to Table 16 (inclusive) is less than the applicable minimum AIR CLEARANCE, that value of minimum AIR CLEARANCE shall be applied as the minimum CREEPAGE DISTANCE.

8.9.1.5 ME EQUIPMENT RATED for high altitudes

Unless otherwise declared by the MANUFACTURER, ME EQUIPMENT is RATED to operate at an altitude ≤ 2 000 m. Where ME EQUIPMENT is intended to be operated in a pressurized environment, e.g. aircraft, the operating altitude corresponding to the air pressure concerned shall be used in determining multiplication factor from Table 8. The AIR CLEARANCE is then multiplied by this factor. CREEPAGE DISTANCES are not subject to the multiplication factors but shall always be at least as large as the resulting value for AIR CLEARANCE.

Table 8 – Multiplication factors for AIR CLEARANCES for altitudes up to 5 000 m

RATED operating altitude (*a*) m	Normal barometric pressure kPa	Multiplication factor for MOOP	Multiplication factor for MOPP
$a \leq 2\,000$	80,0	1,00	1,00
$2\,000 < a \leq 3\,000$	70,0	1,14	1,00
$3\,000 < a \leq 4\,000$	62,0	1,29	1,14
$4\,000 < a \leq 5\,000$	54,0	1,48	1,29
NOTE 1 The multiplication factors for MEANS OF OPERATOR PROTECTION relate to IEC 60950-1:2005 and IEC 62368-1:2018, which specifies AIR CLEARNACES for altitudes up to 2 000 m. NOTE 2 The multiplication factors for MEANS OF PATIENT PROTECTION relate to the second edition of IEC 60601-1, which specified spacing AIR CLEARANCES for altitudes up to 3 000 m. NOTE 3 The multiplication factors for MOOPs (column 3) are derived from IEC 60664-1:2007~~1992 as amended~~.			

8.9.1.6 * Interpolation

If the WORKING VOLTAGE has a value between those given in Table ~~11~~ 12 to Table 16 (inclusive):

– for determining CREEPAGE DISTANCES, linear interpolation is permitted between the nearest two values, the calculated spacing being rounded to the next higher 0,1 mm increment;

– for determining AIR CLEARANCES for PEAK WORKING VOLTAGES above 2 800 V peak or d.c., linear interpolation is permitted between the nearest two values, the calculated spacing being rounded to the next higher 0,1 mm increment;

– for determining AIR CLEARANCES for PEAK WORKING VOLTAGE up to 2 800 V peak or d.c., the higher of the two values shall be applied.

8.9.1.7 Material groups classification

Material groups are classified as shown in Table 9.

Copyright International Electrotechnical Commission
Provided by IHS Markit under license with IEC
No reproduction or networking permitted without license from IHS
Not for Resale, 08/26/2020 19:12:41 MDT

Table 9 – Material group classification

Material group	Comparative tracking index (CTI)
I	600 ≤ CTI
II	400 ≤ CTI < 600
IIIa	175 ≤ CTI < 400
IIIb	100 ≤ CTI < 175

The material group is verified by evaluation of the test data for the material according to IEC 60112 using 50 drops of solution A.

If the material group is not known, material group IIIb shall be assumed.

8.9.1.8 Pollution degree classification

Pollution degrees are classified as follows:

– Pollution degree 1 is used to describe a micro-environment that is sealed so as to exclude dust and moisture.

NOTE 1 An example of such a micro-environment is a sealed or potted component or assembly.

– Pollution degree 2 is used to describe a micro-environment where only non-conductive pollution occurs except that occasionally a temporary conductivity caused by condensation is to be expected.

– Pollution degree 3 is used to describe a micro-environment that is subject to conductive pollution, or to dry non-conductive pollution that could become conductive due to expected condensation.

– Pollution degree 4 is used to describe a micro-environment where continuous conductivity occurs due to conductive dust, rain or other wet conditions.

NOTE 2 This type of environment can occur inside commutating motors which generate carbon dust from the brushes.

Pollution degree 4 is not acceptable for insulation providing a MEANS OF PROTECTION. However, in the case where insulation between the MAINS PART and earth might be compromised, it is necessary to provide measures, such as planned maintenance, to ensure that the micro-environment is mitigated to a lower pollution degree.

Annex M specifies measures that may be used to reduce the pollution degree.

8.9.1.9 Overvoltage category classification

The applicable value of the MAINS TRANSIENT VOLTAGE shall be determined from the overvoltage category according to IEC 60664-1 and the NOMINAL a.c. MAINS VOLTAGE using Table 10.

8.9.1.10 AIR CLEARANCE for MAINS PARTS

For MAINS PARTS operating on RATED MAINS VOLTAGES up to 300 V, the required AIR CLEARANCE shall be the value in Table 13 for the r.m.s. or d.c. RATED MAINS VOLTAGE plus the additional AIR CLEARANCE in Table 14 for the PEAK WORKING VOLTAGE.

8.9.1.11 SUPPLY MAINS overvoltage

This standard relates to overvoltage category II according to IEC 60664-1. If ME EQUIPMENT is intended to be used in locations where the SUPPLY MAINS is overvoltage category III, the values specified in Table 13 to Table 15 (inclusive) will be inadequate for clearance. Therefore the values given in the next MAINS TRANSIENT VOLTAGE column upwards shall be used. Whilst it is not envisaged that PATIENT protection (Table 12) will be required for use of ME EQUIPMENT on overvoltage category III SUPPLY MAINS, should this be necessary, guidance is given on the values required in the rationale for Subclause 8.9.

Copyright International Electrotechnical Commission
Provided by IHS Markit under license with IEC
No reproduction or networking permitted without license from IHS Not for Resale, 08/26/2020 19:12:41 MDT

Table 10 – MAINS TRANSIENT VOLTAGE

NOMINAL a.c. SUPPLY MAINS voltage line-to-neutral up to and including V r.m.s.	MAINS TRANSIENT VOLTAGE V peak			
	Overvoltage Category			
	I	II	III	IV
50	330	500	800	1 500
100	500	800	1 500	2 500
150 [a]	800	1 500	2 500	4 000
300 [b]	1 500	2 500	4 000	6 000
600 [c]	2 500	4 000	6 000	8 000
NOTE 1 In Norway, due to the IT power distribution system used, the a.c SUPPLY MAINS voltage is considered to be equal to the line-to-line voltage, and will remain 230 V in case of a single earth fault. NOTE 2 In Japan, the value of the MAINS TRANSIENT VOLTAGES for the NOMINAL a.c. SUPPLY MAINS voltage of 100 V is determined from columns applicable to the NOMINAL a.c. SUPPLY MAINS voltage of 150 V.				
[a] Including 120/208 or 120/240 V. [b] Including 230/400 or 277/480 V. [c] Including 400/690 V.				

8.9.1.12 SECONDARY CIRCUITS

A SECONDARY CIRCUIT derived from a SUPPLY MAINS will normally be overvoltage category I according to IEC 60664-1 if the MAINS PART is overvoltage category II; the maximum transients for various SUPPLY MAINS voltages in overvoltage category I are shown in the column headings of Table 15.

Where the SECONDARY CIRCUIT is earthed or the ME EQUIPMENT is INTERNALLY POWERED, Table 15 applies.

Where a SECONDARY CIRCUIT is not earthed and is derived from a SUPPLY MAINS, the circuit shall be subjected to the requirements for primary circuits in Table 13 and Table 14.

If the SECONDARY CIRCUIT is separated from the MAINS PART by a functionally earthed or PROTECTIVELY EARTHED metal screen or transients in the SECONDARY CIRCUIT are below the levels expected for overvoltage category I, (for example due to being attenuated by connecting a component, such as a capacitor, between the SECONDARY CIRCUIT and earth), the values in Table 15 apply.

The column for circuits not subject to transient overvoltages applies to:

– d.c. SECONDARY CIRCUITS that are reliably connected to earth and have capacitive filtering which limits the peak-to-peak ripple to 10 % of the d.c. voltage; ~~and~~

– circuits in INTERNALLY POWERED ME EQUIPMENT~~.~~; or

– the MEANS OF PROTECTION required by 15.4.3.5 and 15.5.1.1.

8.9.1.13 PEAK WORKING VOLTAGES above 1 400 V peak or d.c.

The values in Table 15 for PEAK WORKING VOLTAGES above 1 400 V peak or d.c. do not apply if all the following conditions are satisfied:

– the AIR CLEARANCE is at least 5 mm;

Copyright International Electrotechnical Commission
Provided by IHS Markit under license with IEC
No reproduction or networking permitted without license from IHS
Not for Resale, 08/26/2020 19:12:41 MDT

– the insulation involved passes a dielectric strength test according to 8.8.3 using:
  - an a.c. test voltage whose r.m.s. value is equal to 1,06 times the PEAK WORKING VOLTAGE or
  - a d.c. test voltage equal to the peak value of the a.c. test voltage prescribed above;

  and

– the AIR CLEARANCE path is partly or entirely through air or along the surface of an insulating material of material group I.

If the AIR CLEARANCE path is also partly along the surface of a material that is not material group I, the dielectric strength test is conducted only across the part(s) of the path that are through air.

8.9.1.14 Minimum CREEPAGE DISTANCES for two MEANS OF OPERATOR PROTECTION

Minimum CREEPAGE DISTANCES for two MEANS OF OPERATOR PROTECTION are obtained by doubling the values shown in Table 16 for one MEANS OF OPERATOR PROTECTION.

8.9.1.15 * CREEPAGE DISTANCES and AIR CLEARANCES for DEFIBRILLATION-PROOF APPLIED PARTS

CREEPAGE DISTANCES and AIR CLEARANCES needed to satisfy 8.5.5.1 for DEFIBRILLATION-PROOF APPLIED PARTS shall not be less than 4 mm.

~~NOTE In Table 11 and Table 12, which detail the spacing for PATIENT protection, the CREEPAGE DISTANCE and AIR CLEARANCE are both related to r.m.s. or d.c. WORKING VOLTAGES. In Table 13, Table 14 and Table 15, which detail the spacing for OPERATOR protection, the clearance AIR CLEARANCE is related to peak or d.c. WORKING VOLTAGE and the CREEPAGE DISTANCE is related to r.m.s. or d.c. WORKING VOLTAGE.~~

Table 11 – ~~Minimum CREEPAGE DISTANCES and AIR CLEARANCES between parts of opposite polarity of the MAINS PART~~ Not used

~~WORKING VOLTAGE V d.c. up to and including~~	~~WORKING VOLTAGE V r.m.s. up to and including~~	~~CREEPAGE DISTANCE mm~~	~~AIR CLEARANCE mm~~
~~17~~	~~12~~	~~0,8~~	~~0,4~~
~~43~~	~~30~~	~~1~~	~~0,5~~
~~85~~	~~60~~	~~1,3~~	~~0,7~~
~~177~~	~~125~~	~~2~~	~~1~~
~~354~~	~~250~~	~~3~~	~~1,6~~
~~566~~	~~400~~	~~4~~	~~2,4~~
~~707~~	~~500~~	~~5,5~~	~~3~~
~~934~~	~~660~~	~~7~~	~~4~~
~~1 061~~	~~750~~	~~8~~	~~4,5~~
~~1 414~~	~~1 000~~	~~11~~	~~6~~

Copyright International Electrotechnical Commission
Provided by IHS Markit under license with IEC
No reproduction or networking permitted without license from IHS
Not for Resale, 08/26/2020 19:12:41 MDT

Table 12 – Minimum CREEPAGE DISTANCES and AIR CLEARANCES providing MEANS OF PATIENT PROTECTION

WORKING VOLTAGE V d.c. up to and including	WORKING VOLTAGE V r.m.s. up to and including	Spacing providing one MEANS OF PATIENT PROTECTION		Spacing providing two MEANS OF PATIENT PROTECTION	
		CREEPAGE DISTANCE mm	AIR CLEARANCE mm	CREEPAGE DISTANCE mm	AIR CLEARANCE mm
17	12	1,7	0,8	3,4	1,6
43	30	2	1	4	2
85	60	2,3	1,2	4,6	2,4
177	125	3	1,6	6	3,2
354	250	4	2,5	8	5
566	400	6	3,5	12	7
707	500	8	4,5	16	9
934	660	10,5	6	21	12
1 061	750	12	6,5	24	13
1 414	1 000	16	9	32	18
1 768	1 250	20	11,4	40	22,8
2 263	1 600	25	14,3	50	28,6
2 828	2 000	32	18,3	64	36,6
3 535	2 500	40	22,9	80	45,8
4 525	3 200	50	28,6	100	57,2
5 656	4 000	63	36,0	126	72,0
7 070	5 000	80	45,7	160	91,4
8 909	6 300	100	57,1	200	114,2
11 312	8 000	125	71,4	250	142,8
14 140	10 000	160	91,4	320	182,8

NOTE 1 For MOPP, the values of CREEPAGE DISTANCE and AIR CLEARANCE are based on values in the second edition of IEC 60601-1 [74] and are applied regardless of pollution degree, over-voltage category and material group.

NOTE 2 The CREEPAGE DISTANCE and AIR CLEARANCE in this table are both related to r.m.s. or d.c. WORKING VOLTAGES.

NOTE 3 It is recognised that the values in this table do not take into account waveforms with low r.m.s. and high PEAK WORKING VOLTAGES. For the specific case of switch mode power supply units employing MOPP, use the measured r.m.s. as the WORKING VOLTAGE.

NOTE 4 Barriers providing 2 MOOP according to Tables 13 to Table 15 (inclusive) or according to IEC 60950-1:2005, IEC 60950-1:2005/AMD1:2009 and IEC 60950-1:2005/AMD2:2013 meet the requirements for 1 MOPP according to this table for WORKING VOLTAGES up to and including 707 V d.c. / 500 V r.m.s. At higher WORKING VOLTAGES, 2 MOOP does not necessarily provide 1 MOPP.

Barriers providing REINFORCED INSULATION (2 MOOP) according to IEC 62368-1:2018 meet the requirements for 1 MOPP for WORKING VOLTAGES up to and including 354 V d.c. / 250 V r.m.s. according to this table. At higher WORKING VOLTAGES, REINFORCED INSULATION (2 MOOP) does not necessarily provide 1 MOPP.

Copyright International Electrotechnical Commission
Provided by IHS Markit under license with IEC
No reproduction or networking permitted without license from IHS Not for Resale, 08/26/2020 19:12:41 MDT

Table 13 – Minimum AIR CLEARANCES providing MEANS OF OPERATOR PROTECTION from the MAINS PART

AIR CLEARANCE in mm

WORKING VOLTAGE up to and including		NOMINAL MAINS VOLTAGE ≤ 150 V (MAINS TRANSIENT VOLTAGE 1 500 V)				150 V < NOMINAL MAINS VOLTAGE ≤ 300 V (MAINS TRANSIENT VOLTAGE 2 500 V)		300 V < NOMINAL MAINS VOLTAGE ≤ 600 V (MAINS TRANSIENT VOLTAGE 4 000V)	
Voltage peak or d.c.	Voltage r.m.s (sinusoidal)	Pollution degrees 1 and 2		Pollution degree 3		Pollution degrees 1, 2 and 3		Pollution degrees 1, 2 and 3	
V	V	One MOOP	Two MOOP	One MOOP	Two MOOP	One MOOP	Two MOOP	One MOOP	Two MOOP
210	150	1,0	2,0	1,3	2,6	2,0	4,0	3,2	6,4
420	300	1 MOOP 2,0 2 MOOP 4,0						3,2	6,4
840	600	1 MOOP 3,2 2 MOOP 6,4							
1 400	1 000	1 MOOP 4,2 2 MOOP 6,4							
2 800	2 000	1 or 2 MOOP 8,4							
7 000	5 000	1 or 2 MOOP 17,5							
9 800	7 000	1 or 2 MOOP 25							
14 000	10 000	1 or 2 MOOP 37							
28 000	20 000	1 or 2 MOOP 80							

AIR CLEARANCES for WORKING VOLTAGES above 20 kV r.m.s. or 28 kV d.c. can be prescribed by particular standards if necessary.

NOTE AIR CLEARNACES are a function of peak voltage in the circuit. The r.m.s. voltage column is provided for the special case where the voltage has a sinusoidal waveform.

Copyright International Electrotechnical Commission
Provided by IHS Markit under license with IEC
No reproduction or networking permitted without license from IHS
Not for Resale, 08/26/2020 19:12:41 MDT

Table 14 – Additional AIR CLEARANCES for insulation in MAINS PARTS with PEAK WORKING VOLTAGES exceeding the peak value of the NOMINAL MAINS VOLTAGE [a]
(see 8.9.1.10)

NOMINAL MAINS VOLTAGE ≤ 150 V r.m.s. or 210 V d.c.		150 V r.m.s. or 210 V dc < NOMINAL MAINS VOLTAGE ≤ 300 V r.m.s. or 420 V d.c.	Additional AIR CLEARANCE mm	
Pollution degrees 1 and 2	Pollution degree 3	Pollution degrees 1, 2 and 3		
PEAK WORKING VOLTAGE V	PEAK WORKING VOLTAGE V	PEAK WORKING VOLTAGE V	One MOOP	TWO MOOP
210	210	420	0	0
298	294	493	0,1	0,2
386	379	567	0,2	0,4
474	463	640	0,3	0,6
562	547	713	0,4	0,8
650	632	787	0,5	1,0
738	715	860	0,6	1,2
826	800	933	0,7	1,4
914		1 006	0,8	1,6
1 002		1 080	0,9	1,8
1 090		1 153	1,0	2,0
		1 226	1,1	2,2
		1 300	1,2	2,4

[a] When using this table, select the appropriate column for the RATED MAINS VOLTAGE and pollution degree and choose the row in that column which covers the actual PEAK WORKING VOLTAGE. Read the additional AIR CLEARANCE required from the relevant right hand column (for one or two MEANS OF OPERATOR PROTECTION and add this to the minimum AIR CLEARANCE from Table 13 to give the total minimum AIR CLEARANCE.

NOTE For voltage values above the PEAK WORKING VOLTAGE values given in the table, linear extrapolation is permitted.

Copyright International Electrotechnical Commission
Provided by IHS Markit under license with IEC
No reproduction or networking permitted without license from IHS Not for Resale, 08/26/2020 19:12:41 MDT

Table 15 – Minimum AIR CLEARANCES for MEANS OF OPERATOR PROTECTION in SECONDARY CIRCUITS
(see 8.9.1.12)

AIR CLEARANCES in mm

WORKING VOLTAGE up to and including		Transient value for SECONDARY CIRCUIT ≤ 800 V (NOMINAL MAINS VOLTAGE ≤ 150 V)				Transient value for SECONDARY CIRCUIT ≤ 1 500 V (150 V < NOMINAL MAINS VOLTAGE ≤ 300 V)				Transient value for SECONDARY CIRCUIT ≤ 2 500 V (300 V < NOMINAL MAINS VOLTAGE ≤600 V)		Circuit not subject to transient overvoltages	
Voltage V peak or V d.c.	Voltage V r.m.s. (sinu-soidal)	Pollution degrees 1 and 2		Pollution degree 3		Pollution degrees 1 and 2		Pollution degree 3		Pollution degrees 1, 2 and 3		Pollution degrees 1 and 2 only	
		One MOOP	Two MOOP	One MOOP	Two MOOP	One MOOP	Two MOOP	One MOOP	Two MOOP	One MOOP	Two MOOP	One MOOP	Two MOOP
71	50	0,7	1,4	1,3	2,6	1,0	2,0	1,3	2,6	2,0	4,0	0,4	0,8
140	100	0,7	1,4	1,3	2,6	1,0	2,0	1,3	2,6	2,0	4,0	0,7	1,4
210	150	0,9	1,8	1,3	2,6	1,0	2,0	1,3	2,6	2,0	4,0	0,7	1,4
280	200	One MOOP 1,4; two MOOP 2,8								2,0	4,0	1,1	2,2
420	300	One MOOP 1,9; two MOOP 3,8								2,0	4,0	1,4	2,8
700	500	One MOOP 2,5; two MOOP 5,0											
840	600	One MOOP 3,2; two MOOP 5,0											
1 400	1 000	One MOOP 4,2; two MOOP 5,0											
2 800	2 000	One or two MOOP 8,4, but see 8.9.1.13											
7 000	5 000	One or two MOOP 17,5, but see 8.9.1.13											
9 800	7 000	One or two MOOP 25, but see 8.9.1.13											
14 000	10 000	One or two MOOP 37, but see 8.9.1.13											
28 000	20 000	One or two MOOP 80, but see 8.9.1.13											
42 000	30 000	One or two MOOP 130, but see 8.9.1.13											

NOTE AIR CLEARNACES are a function of peak voltage in the circuit. The r.m.s voltage column is provided for the special case where the voltage has a sinusoidal waveform.

Copyright International Electrotechnical Commission
Provided by IHS Markit under license with IEC
No reproduction or networking permitted without license from IHS
Not for Resale, 08/26/2020 19:12:41 MDT

Table 16 – Minimum CREEPAGE DISTANCES providing MEANS OF OPERATOR PROTECTION [a]

CREEPAGE DISTANCE in mm

WORKING VOLTAGE V r.m.s or d.c.	Spacing for one MEANS OF OPERATOR PROTECTION						
	Pollution degree 1	Pollution degree 2			Pollution degree 3		
	Material group	Material group			Material group		
	I, II, IIIa, IIIb	I	II	IIIa or IIIb	I	II	IIIa or IIIb
50	Use the AIR CLEARANCE from the appropriate table	0,6	0,9	1,2	1,5	1,7	1,9
100		0,7	1,0	1,4	1,8	2,0	2,2
125		0,8	1,1	1,5	1,9	2,1	2,4
150		0,8	1,1	1,6	2,0	2,2	2,5
200		1,0	1,4	2,0	2,5	2,8	3,2
250		1,3	1,8	2,5	3,2	3,6	4,0
300		1,6	2,2	3,2	4,0	4,5	5,0
400		2,0	2,8	4,0	5,0	5,6	6,3
600		3,2	4,5	6,3	8,0	9,6	10,0
800		4.0	5,6	8,0	10,0	11,0	12,5
1 000		5,0	7,1	10,0	12,5	14,0	16,0

NOTE Minimum CREEPAGE DISTANCES for two MEANS OF OPERATOR PROTECTION are obtained by doubling the values in this table.

[a] CREEPAGE DISTANCES within this table apply to all situations.

WORKING VOLTAGE V r.m.s or d.c.	Spacing for one MEANS OF OPERATOR PROTECTION						
	Pollution degree 1	Pollution degree 2			Pollution degree 3		
	Material group	Material group			Material group		
	I, II, IIIa, IIIb	I	II	IIIa or IIIb	I	II	IIIa or IIIb
25	Use the AIR CLEARANCE from the appropriate table	0,5	0.5	0,5	1,3	1,3	1,3
50		0,6	0,9	1,2	1,5	1,7	1,9
100		0,7	1,0	1,4	1,8	2,0	2,2
125		0,8	1,1	1,5	1,9	2,1	2,4
150		0,8	1,1	1,6	2,0	2,2	2,5
200		1,0	1,4	2,0	2,5	2,8	3,2
250		1,3	1,8	2,5	3,2	3,6	4,0
300		1,6	2,2	3,2	4,0	4,5	5,0
400		2,0	2,8	4,0	5,0	5,6	6,3
600		3,2	4,5	6,3	8,0	9,6	10,0
800		4.0	5,6	8,0	10,0	11,0	12,5
1 000		5,0	7,1	10,0	12,5	14,0	16,0

NOTE 1 Minimum CREEPAGE DISTANCES for two MEANS OF OPERATOR PROTECTION are obtained by doubling the values in this table.

NOTE 2 A CREEPAGE DISTANCE cannot be less than the required air clearance. See 8.9.1.4.

NOTE 3 For WORKING VOLTAGE values greater than 1 000 V, refer to Table A.2.

[a] CREEPAGE DISTANCES within this table apply to all situations.

Copyright International Electrotechnical Commission
Provided by IHS Markit under license with IEC
No reproduction or networking permitted without license from IHS
Not for Resale, 08/26/2020 19:12:41 MDT

8.9.1.16 Conductive surface coatings

When conductive coatings are applied to non-metallic surfaces, it shall be established that flaking or peeling does not result in the reduction of any AIR CLEARANCE or CREEPAGE DISTANCE.

Compliance is checked by examination of the construction and of the available data. If such data is not available, compliance is checked by application of an appropriate coating test standard.

NOTE Example of coating test standards include ISO 2409 [78], ISO 4624 [79] and UL 746C [82].

8.9.2 * Application

a) * For insulation in the MAINS PART between parts of opposite polarity, the minimum CREEPAGE DISTANCES and AIR CLEARANCES are not required if short circuiting of each single one of these CREEPAGE DISTANCES and AIR CLEARANCES in turn does not result in a HAZARDOUS SITUATION described in 13.1.

b) The contribution to the CREEPAGE DISTANCES of any groove or air gap less than ~~1 mm wide~~ the minimum spacing (X) shall be limited to its width (see Figure 23 to Figure 31 [inclusive]).

c) If AIR CLEARANCE provides a MEANS OF PROTECTION, the relative positioning shall be such that the relevant parts are rigid and located by moulding or the design shall be otherwise such that there is no reduction of a distance below the specified value by deformation or movement of the parts.

   Where limited movement of one of the relevant parts is normal or likely, this shall be taken into account when computing the minimum AIR CLEARANCE.

8.9.3 * Spaces filled by insulating compound

8.9.3.1 General

Where distances between conductive parts are filled with insulating compound, including where insulation is reliably cemented together with insulating compound, so that AIR CLEARANCES and CREEPAGE DISTANCES do not exist, only the requirements for solid insulation apply.

NOTE Examples of such treatment include potting, encapsulation and vacuum impregnation, components or subassemblies that are treated with an insulating compound that fills voids; and internal insulation between adjacent tracks on one layer of a multi-layer printed board.

Compliance is checked by inspection, measurement and test of samples. Requirements for CREEPAGE DISTANCES and AIR CLEARANCES do not apply if samples pass the thermal cycling, humidity preconditioning and dielectric strength tests specified in either 8.9.3.2 and 8.9.3.4 or 8.9.3.3 and 8.9.3.4.

8.9.3.2 Insulating compound forming solid insulation between conductive parts

For situations where insulating compound forms solid insulation between conductive parts, a single finished sample is tested. The sample is subjected to the thermal cycling PROCEDURE as specified in 8.9.3.4, followed by humidity preconditioning according to 5.7 except for 48 hours only, followed by a dielectric strength test according to 8.8.3 except that the test voltage is multiplied by 1,6. The tests are followed by inspection, including sectioning, and measurement. Cracks or voids in the insulating compound such as would affect the homogeneity of the material constitute a failure.

Copyright International Electrotechnical Commission
Provided by IHS Markit under license with IEC
No reproduction or networking permitted without license from IHS Not for Resale, 08/26/2020 19:12:41 MDT

8.9.3.3 Insulating compound forming a cemented joint with other insulating parts

For situations where insulating compound forms a cemented joint with other insulating parts, the reliability of the joint is checked by testing three samples. If a winding of solvent-based enamelled wire is used, it is replaced for the test by a metal foil or by a few turns of bare wire, placed close to the cemented joint. The three samples are then tested as follows.

– *One of the samples is subjected to the thermal cycling* PROCEDURE *as specified in 8.9.3.4. Immediately after the last period at highest temperature during thermal cycling it is subjected to a dielectric strength test according to 8.8.3 except that the test voltage is multiplied by 1,6*;

– *The other two samples are subjected to humidity preconditioning according to 5.7 except for 48 hours only, followed by a dielectric strength test according to 8.8.3 except that the test voltage is multiplied by 1,6.*

8.9.3.4 Thermal cycling

The sample is subjected 10 times to the following sequence of temperature cycles:

68 h	at	T_1	± 2 °C;
1 h	at	25 °C	± 2 °C;
2 h	at	0 °C	± 2 °C;
not less than 1 h	at	25 °C	± 2 °C,

where T_1 is the higher of

– *10 °C above the maximum temperature of the relevant part as determined according to 11.1.1; or*

– *85 °C.*

However, the 10 °C margin is not added if the temperature is measured by an embedded thermocouple.

The period of time taken for the transition from one temperature to another is not specified, but the transition is permitted to be gradual.

8.9.4 * Measurement of CREEPAGE DISTANCES AND AIR CLEARANCES

Compliance is checked by measurement taking into account the rules in Figure 22 to Figure 31 *(inclusive). In each figure, the dashed line (— — —) represents* AIR CLEARANCE *and the shaded bar (▒▒▒▒▒▒▒▒▒▒▒▒▒▒▒▒▒▒▒▒)represents* CREEPAGE DISTANCE.

The minimum spacing (X) for grooves transverse to the CREEPAGE DISTANCE *in Figure 23 to Figure 25 and Figure 27 to Figure 31 (inclusive) that are considered a* MEANS OF OPERATOR PROTECTION *may be adjusted based on pollution degree if the minimum* AIR CLEARANCE *is 3 mm or more. The minimum width of the groove is:*

– *0,25 mm for pollution degree 1*

– *1,0 mm for pollution degree 2*

– *1,5 mm for pollution degree 3*

If the specified minimum AIR CLEARANCE *is less than 3 mm, the minimum spacing (X) for grooves transverse to the* CREEPAGE DISTANCE *is the lesser of:*

– *the relevant value specified in the previous paragraph, or*

– *one third of the specified minimum* AIR CLEARANCE.

The minimum spacing (X) for a groove transverse to a CREEPAGE DISTANCE *that is considered a* MEANS OF PATIENT PROTECTION *is 1 mm for pollution degree 1 and pollution degree 2, and 1,5 mm for pollution degree 3.*

Any corner with included angle less than 80° is assumed to be bridged with an insulating link of ~~1~~ X mm moved into the least favourable position (see Figure 25).

Copyright International Electrotechnical Commission
Provided by IHS Markit under license with IEC
No reproduction or networking permitted without license from IHS
Not for Resale, 08/26/2020 19:12:41 MDT

Where the distance across the top of a groove is ~~1~~ X mm or more, no CREEPAGE DISTANCE exists across the air space (see Figure 24).

CREEPAGE DISTANCES and AIR CLEARANCES between parts moving relative to each other are measured with the parts in their least favourable positions.

Computed CREEPAGE DISTANCE is never less than measured AIR CLEARANCE.

Coatings of varnish, enamel or oxide are ignored. Coverings of any insulating material, however, are considered as insulation, if the covering is equivalent to a sheet of insulating material of equal thickness with respect to its electrical, thermal and mechanical properties.

If CREEPAGE DISTANCES or AIR CLEARANCES for one or two MEANS OF PROTECTION are interrupted by one or more floating conductive parts, the minimum values specified in Table ~~11~~ 12 to Table 16 (inclusive) apply to the sum of the sections, except that distances less than ~~1~~ X mm are not taken into consideration.

If there are grooves transverse to the CREEPAGE DISTANCE, the wall of the groove is counted as CREEPAGE DISTANCE only if the width of the groove is more than ~~1~~ X mm (see Figure 24). In all other cases the groove is neglected.

In the case of a barrier placed on the surface of insulation or held in a recess, the CREEPAGE DISTANCES are measured over the barrier only if the latter is so affixed that dust and moisture cannot penetrate into the joint or recess.

For ME EQUIPMENT provided with an APPLIANCE INLET, the measurements are made with an appropriate connector inserted. For other ME EQUIPMENT incorporating POWER SUPPLY CORDS, they are made with supply conductors of the largest cross-sectional area specified by the MANUFACTURER and also without conductors.

Movable parts are placed in the least favourable position; nuts and screws with non-circular heads are tightened in the least favourable position.

CREEPAGE DISTANCES and AIR CLEARANCES through slots or openings in external parts are measured to the standard test finger of Figure 6. If necessary, a force is applied to any point on bare conductors and to the outside of metal ENCLOSURES in an endeavour to reduce the CREEPAGE DISTANCES and AIR CLEARANCES while taking the measurements.

The force is applied by means of a standard test finger having a tip as shown in Figure 6 and has a value of:

2 N for bare conductors;
30 N for ENCLOSURES.

CREEPAGE DISTANCE and AIR CLEARANCES are measured after use of the test hook according to 5.9.2.2, if relevant.

Copyright International Electrotechnical Commission
Provided by IHS Markit under license with IEC
No reproduction or networking permitted without license from IHS
Not for Resale, 08/26/2020 19:12:41 MDT

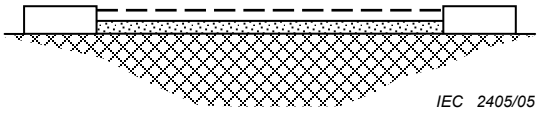

Condition: Path under consideration is a flat surface.

Rule: CREEPAGE DISTANCE and AIR CLEARANCE are measured directly across the surface.

Figure 22 – CREEPAGE DISTANCE and AIR CLEARANCE – Example 1

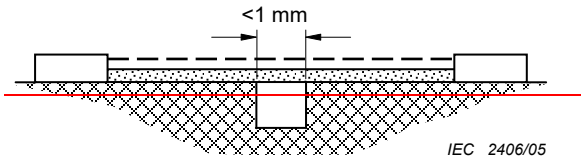

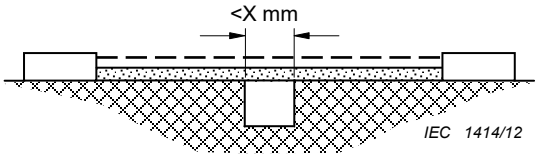

Condition: Path under consideration includes a parallel- or converging-sided groove of any depth with a width less than ~~1~~ X mm.

Rule: CREEPAGE DISTANCE and AIR CLEARANCE are measured directly across the groove as shown.

Figure 23 – CREEPAGE DISTANCE and AIR CLEARANCE – Example 2

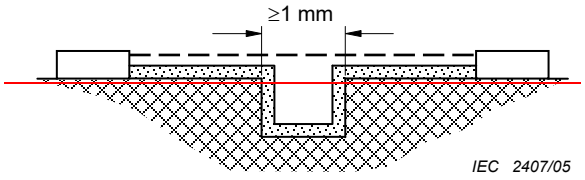

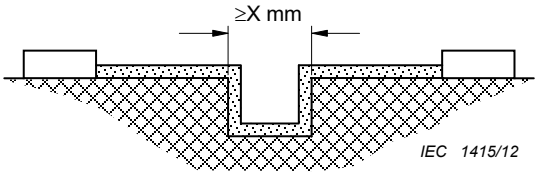

Condition: Path under consideration includes a parallel-sided groove of any depth and equal to or more than ~~1~~ X mm.

Rule: AIR CLEARANCE is the “line of sight” distance. CREEPAGE DISTANCE path follows the contour of the groove.

Figure 24 – CREEPAGE DISTANCE and AIR CLEARANCE – Example 3

Copyright International Electrotechnical Commission
Provided by IHS Markit under license with IEC
No reproduction or networking permitted without license from IHS
Not for Resale, 08/26/2020 19:12:41 MDT

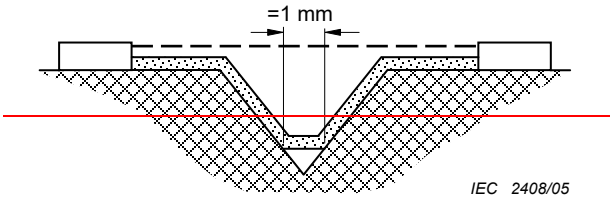

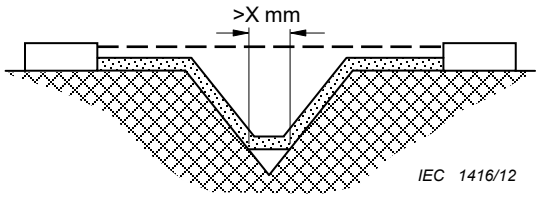

Condition: Path under consideration includes a V-shaped groove with a width greater than ~~1~~ X mm and an internal angle of less than 80°.

Rule: AIR CLEARANCE is the "line of sight" distance. CREEPAGE DISTANCE path follows the contour of the groove but "short circuits" the bottom of the groove by a ~~1~~ X mm link.

Figure 25 – CREEPAGE DISTANCE and AIR CLEARANCE – Example 4

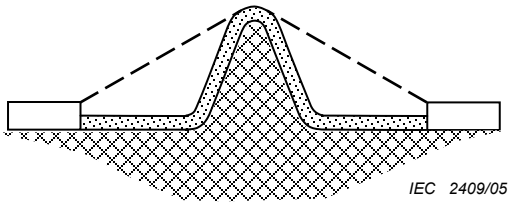

Condition: Path under consideration includes a rib.

Rule: AIR CLEARANCE is the shortest direct air path over the top of the rib. CREEPAGE DISTANCE path follows the contour of the rib.

Figure 26 – CREEPAGE DISTANCE and AIR CLEARANCE – Example 5

Copyright International Electrotechnical Commission
Provided by IHS Markit under license with IEC
No reproduction or networking permitted without license from IHS
Not for Resale, 08/26/2020 19:12:41 MDT

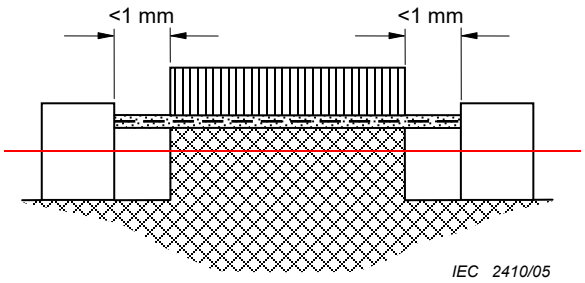

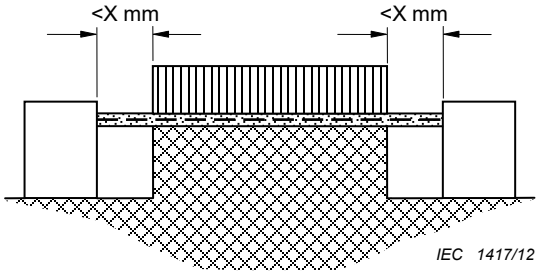

Condition: Path under consideration includes an uncemented joint (see 8.9.3) with grooves less than ~~1~~ X mm wide on each side.

Rule: CREEPAGE DISTANCE and AIR CLEARANCE path are the "line of sight" distance shown.

Figure 27 – CREEPAGE DISTANCE and AIR CLEARANCE – Example 6

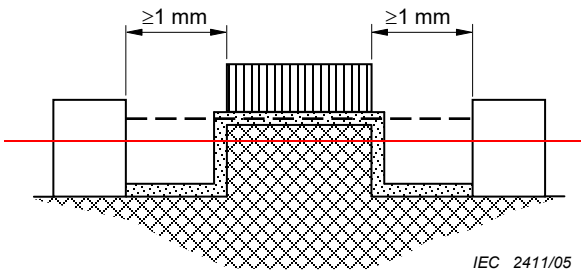

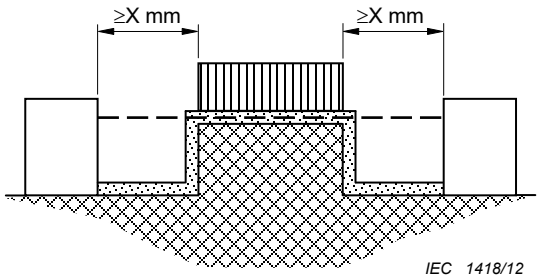

Condition: Path under consideration includes an uncemented joint (see 8.9.3) with grooves equal to or more that ~~1~~ X mm wide on each side.

Rule: AIR CLEARANCE is the "line of sight" distance. CREEPAGE DISTANCE path follows the contour of the groove.

Figure 28 – CREEPAGE DISTANCE and AIR CLEARANCE – Example 7

--`,,```,,,,````-`-`,,`,,`,`,,`---

Copyright International Electrotechnical Commission
Provided by IHS Markit under license with IEC
No reproduction or networking permitted without license from IHS
Not for Resale, 08/26/2020 19:12:41 MDT

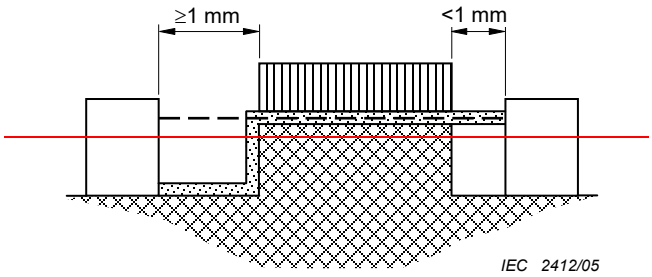

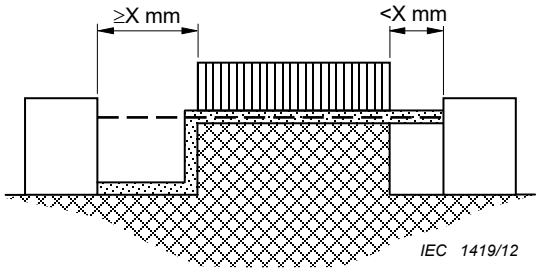

Condition: Path under consideration includes an uncemented joint (see 8.9.3) with a groove on one side less than ~~1~~ X mm wide and the groove on the other side equal to or more than ~~1~~ X mm wide.

Rule: AIR CLEARANCE and CREEPAGE DISTANCE are as shown.

Figure 29 – CREEPAGE DISTANCE and AIR CLEARANCE – Example 8

Copyright International Electrotechnical Commission
Provided by IHS Markit under license with IEC
No reproduction or networking permitted without license from IHS
Not for Resale, 08/26/2020 19:12:41 MDT

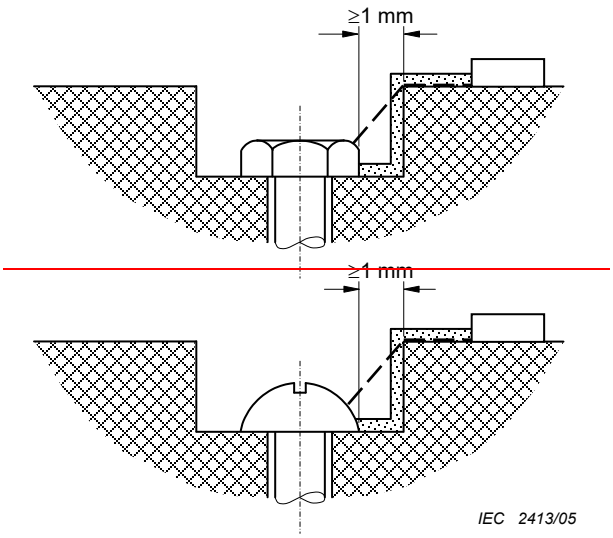

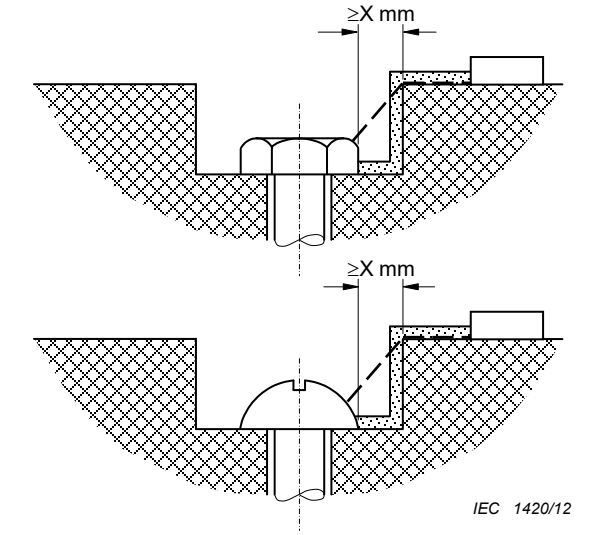

Condition: Gap between head of screw and wall of recess wide enough to be taken into account.

Rule: The AIR CLEARNACE is the shortest distance to any point on the head of the screw. CREEPAGE DISTANCE path follows the surface.

Figure 30 – CREEPAGE DISTANCE and AIR CLEARANCE – Example 9

Copyright International Electrotechnical Commission
Provided by IHS Markit under license with IEC
No reproduction or networking permitted without license from IHS
Not for Resale, 08/26/2020 19:12:41 MDT

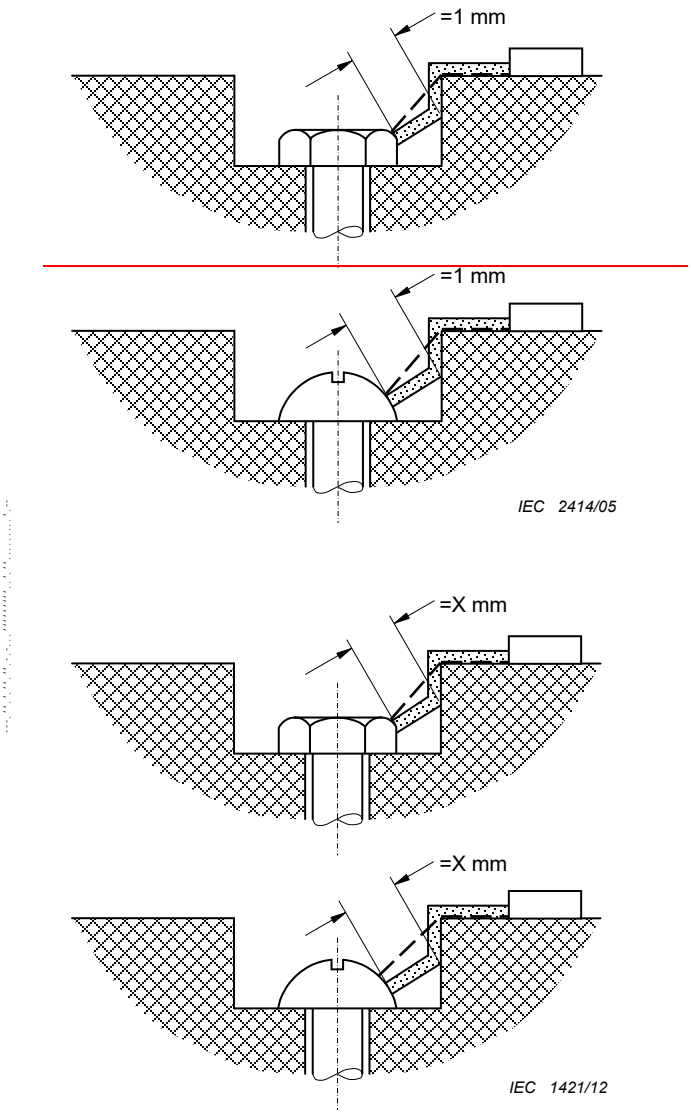

Condition: Gap between head of screw and wall of recess too narrow to be taken into account.

Rule: Measurement of CREEPAGE DISTANCE is from screw to wall at any point where the distance is equal to ~~1~~ X mm. The AIR CLEARNACE is the shortest distance to any point on the head of the screw.

Figure 31 – CREEPAGE DISTANCE and AIR CLEARANCE – Example 10

8.10 Components and wiring

8.10.1 * Fixing of components

Components of ME EQUIPMENT, the unwanted movement of which could result in an unacceptable RISK, shall be mounted securely to prevent such movement.

Compliance is checked by inspection of the ME EQUIPMENT and the RISK MANAGEMENT FILE.

8.10.2 * Fixing of wiring

Conductors and connectors of ME EQUIPMENT shall be so secured or insulated that accidental detachment shall not result in a HAZARDOUS SITUATION. They are not considered to be adequately secured if on breaking free at their joint and moving about their support point they are capable of touching ~~circuit points~~ parts resulting in a HAZARDOUS SITUATION described in 13.1.

Breaking free of one means of mechanical restraint shall be considered a SINGLE FAULT CONDITION.

Copyright International Electrotechnical Commission
Provided by IHS Markit under license with IEC
No reproduction or networking permitted without license from IHS
Not for Resale, 08/26/2020 19:12:41 MDT

Stranded conductors shall not be solder-coated if they are affixed by any clamping means and poor contact could result in a HAZARDOUS SITUATION described in 13.1.

Compliance is checked by inspection of the ME EQUIPMENT ~~and the RISK MANAGEMENT FILE~~.

8.10.3 Connections between different parts of ME EQUIPMENT

Flexible cords detachable without the use of a TOOL that are used for interconnection of different parts of ME EQUIPMENT shall be provided with means for connection such that compliance of metal ACCESSIBLE PARTS with 8.4 is not compromised when a connection is loosened or broken due to the disengagement of one of the connecting means.

Compliance is checked by inspection and measurement and, if necessary, by a test with the standard test finger according to 5.9.2.1.

8.10.4 * Cord-connected HAND-HELD parts and cord-connected foot-operated control devices (see also 15.4.7)

8.10.4.1 Limitation of operating voltages

Cord-connected HAND-HELD and foot-operated control devices of ME EQUIPMENT and their associated connection cords shall contain only conductors and components operating at voltages not exceeding 42,4 V peak a.c. or 60 V d.c. in circuits isolated from the MAINS PART by two MEANS OF PROTECTION. The d.c. limit of 60 V applies to d.c. with not more than 10 % peak-to-peak ripple. If the ripple exceeds that amount, the 42,4 V peak limit applies.

Compliance is checked by inspection and, if necessary, voltage measurements.

8.10.4.2 Connection cords

The connection and anchorage at both ends of a flexible cord to a HAND-HELD or foot-operated control device of ME EQUIPMENT~~, at both ends of the cable to the control device,~~ shall comply with the requirements specified for POWER SUPPLY CORDS in 8.11.3, if breaking free or shorting between the conductors could result in a HAZARDOUS SITUATION described in 13.1. This requirement also applies to other HAND-HELD parts if disturbance or breaking of one or more of the connections could result in a HAZARDOUS SITUATION described in 13.1.

Compliance is checked by performance of the tests of 8.11.3.

8.10.5 * Mechanical protection of wiring

a) Internal cables and wiring shall be adequately protected against contact with a moving part or from friction at sharp corners and edges where damage to insulation could result in a HAZARDOUS SITUATION described in 13.1.

b) ME EQUIPMENT shall be so designed that wiring, cord forms or components are not likely to be damaged during assembly or the opening or closing of ACCESS COVERS where such damage could result in a HAZARDOUS SITUATION described in 13.1.

Compliance is checked by inspection and, where appropriate, by manual test ~~or reference to the RISK MANAGEMENT FILE~~.

8.10.6 Guiding rollers for insulated conductors

Guiding rollers of insulated conductors of ME EQUIPMENT shall be constructed in such a manner that movable insulated conductors in NORMAL USE are not bent round a radius of less than five times the outer diameter of the lead concerned.

Compliance is checked by inspection and measurement of the relevant dimensions.

--`,,```,,,,````-`-`,,`,,`,`,,`---

Copyright International Electrotechnical Commission
Provided by IHS Markit under license with IEC
No reproduction or networking permitted without license from IHS

Not for Resale, 08/26/2020 19:12:41 MDT

8.10.7 * Insulation of internal wiring

a) If insulating sleeving is needed on internal wiring of ME EQUIPMENT, it shall be adequately secured. Sleeving that can only be removed by breaking or cutting or that is secured at both ends may be used to satisfy this requirement.

b) Inside ME EQUIPMENT the sheath of a flexible cord shall not be used as a MEANS OF PROTECTION if it is subject to mechanical or thermal stresses outside its RATED characteristics.

c) Insulated conductors of ME EQUIPMENT that in NORMAL USE are subject to temperatures exceeding 70 °C shall have insulation of heat-resistant material if compliance with this standard is likely to be impaired by deterioration of the insulation.

Compliance is checked by inspection and, if necessary, by special tests. Temperatures are determined as indicated in 11.1.

8.11 MAINS PARTS, components and layout

8.11.1 Isolation from the SUPPLY MAINS

a) * ME EQUIPMENT shall have means to isolate its circuits electrically from the SUPPLY MAINS on all poles simultaneously.

PERMANENTLY INSTALLED ME EQUIPMENT connected to a polyphase SUPPLY MAINS may be provided with a device that does not interrupt the neutral conductor, provided that local installation conditions are such that in NORMAL CONDITION the voltage on the neutral conductor can be expected not to exceed the limits specified in 8.4.2 c).

For PERMANENTLY INSTALLED ME EQUIPMENT, the means provided to isolate its circuits electrically from the SUPPLY MAINS shall be capable of being locked in the off position if:

– reconnection would result in a HAZARDOUS SITUATION; or

– any OPERATOR including SERVICE PERSONNEL is unable to view the means of isolation from their intended position.

The locking mechanism may be in a SUPPLY MAINS switch provided by the RESPONSIBLE ORGANIZATION.

The requirements for the isolation device shall be specified in the ACCOMPANYING DOCUMENTS.

b) Means for isolation either shall be incorporated in ME EQUIPMENT or, if external, shall be described in the technical description (see 7.9.3.1).

c) * A SUPPLY MAINS switch that is used to comply with 8.11.1 a) shall comply with the CREEPAGE DISTANCES and AIR CLEARANCES as specified in IEC 61058-1 for a MAINS TRANSIENT VOLTAGE of 4 kV.

NOTE Table 22 in IEC 61058-1:2000 specifies different values for contact separation depending on the MAINS TRANSIENT VOLTAGE , which is referred to in that table as the “rated impulse withstand voltage.”

d) A SUPPLY MAINS switch shall not be incorporated in a POWER SUPPLY CORD or any other external, flexible lead.

e) The ~~direction of movement of the~~ actuator of a SUPPLY MAINS switch that is used to comply with 8.11.1 a) shall comply with IEC 60447.

f) In non-PERMANENTLY INSTALLED ME EQUIPMENT that has no SUPPLY MAINS switch, a suitable plug device used to isolate ME EQUIPMENT from the SUPPLY MAINS shall be considered as

Copyright International Electrotechnical Commission
Provided by IHS Markit under license with IEC
No reproduction or networking permitted without license from IHS
Not for Resale, 08/26/2020 19:12:41 MDT

complying with the requirements of 8.11.1 a). An APPLIANCE COUPLER or a flexible cord with a MAINS PLUG may be used.

g) A fuse or a semiconductor device shall not be used as an isolating means in the sense of this subclause.

h) * ME EQUIPMENT shall not include a device that causes disconnection of the ME EQUIPMENT from the SUPPLY MAINS by producing a short circuit that results in operation of an over-current protection device.

i) * Any part within the ENCLOSURE of ME EQUIPMENT with a circuit voltage exceeding 42,4 V peak a.c. or 60 V d.c. that cannot be disconnected from its supply by an external switch or a plug device that is accessible at all times shall be protected against being touched even after opening of the ENCLOSURE by an additional covering or, in the case of a spatially separated arrangement, shall be marked clearly as exceeding the permitted voltage for parts that can be touched. The use of the symbol ISO 7000-0434 (see Table D.1, symbol 10) is not sufficient. A warning notice on the outside of the ME EQUIPMENT may be used.

Compliance is checked by inspection.

For a part that cannot be disconnected from the supply by an external switch or a plug device that is accessible at all times, compliance is checked by inspection of the required cover or warning notice (if present) and, if necessary, by application of the standard test finger of Figure 6.

8.11.2 * MULTIPLE SOCKET-OUTLETS

MULTIPLE SOCKET-OUTLETS that are integral with ME EQUIPMENT shall comply with the requirements of 16.2 d), second dash, and 16.9.2.1.

Compliance is checked by inspection.

8.11.3 POWER SUPPLY CORDS

8.11.3.1 Application

The MAINS PLUG of ME EQUIPMENT shall not be fitted with more than one POWER SUPPLY CORD.

Compliance is checked by inspection.

8.11.3.2 Types

Any POWER SUPPLY CORD of ME EQUIPMENT shall be not less robust than ordinary tough rubber-sheathed flexible cord (IEC 60245-1:2003, Annex A, designation 53) or ordinary polyvinyl chloride sheathed flexible cord (IEC 60227-1:1993, Annex A, designation 53).

A polyvinyl chloride insulated POWER SUPPLY CORD shall not be used for ME EQUIPMENT having external metal parts with a temperature exceeding 75 °C and which can be touched in NORMAL USE by the cord, unless it is RATED for that temperature. See also Table 22.

Compliance is checked by inspection and measurement.

8.11.3.3 Cross-sectional area of POWER SUPPLY CORD conductors

The NOMINAL cross-sectional area of conductors of any POWER SUPPLY CORD of ME EQUIPMENT shall be not less than that shown in Table 17. For ME EQUIPMENT utilizing POWER SUPPLY CORDS and operating at currents greater than 63 A, apply the electrical regulations appropriate for the jurisdiction in which the ME EQUIPMENT is to be used.

Compliance is checked by inspection.

--`,,```,,,,````-`-`,,`,,`,`,,`---

Copyright International Electrotechnical Commission
Provided by IHS Markit under license with IEC
No reproduction or networking permitted without license from IHS Not for Resale, 08/26/2020 19:12:41 MDT

Table 17 – NOMINAL cross-sectional area of conductors of a POWER SUPPLY CORD

RATED current (*I*) of ME EQUIPMENT A	NOMINAL cross-sectional area mm² Cu
$I \leq 6$	0,75
$6 < I \leq 10$	1
$10< I \leq 16$	1,5
$16< I \leq 25$	2,5
$25< I \leq 32$	4
$32< I \leq 40$	6
$40< I \leq 63$	10

8.11.3.4 * APPLIANCE COUPLERS

APPLIANCE COUPLERS complying with IEC 60320-1 are considered to comply with 8.11.3.5 and 8.11.3.6.

Compliance is checked by inspection of the documentation demonstrating that the APPLIANCE COUPLER conforms to the requirements of IEC 60320-1.

8.11.3.5 * Cord anchorage

a) The conductors of a POWER SUPPLY CORD shall be relieved from strain, including twisting, and the insulation of the conductors shall be protected from abrasion at the point of entry to ME EQUIPMENT or a MAINS CONNECTOR by a cord anchorage.

b) If a total insulation failure of the POWER SUPPLY CORD could cause conductive ACCESSIBLE PARTS that are not PROTECTIVELY EARTHED to exceed the limits specified in 8.4, the cord anchorage of a POWER SUPPLY CORD shall be made:

   – of insulating material, or

   – of metal, insulated from conductive ACCESSIBLE PARTS not PROTECTIVELY EARTHED by a MEANS OF PROTECTION, or

   – of metal provided with an insulating lining, which shall be affixed to the cord anchorage, unless it is a flexible bushing that forms part of the cord guard specified in 8.11.3.6, and which shall comply with the requirements for one MEANS OF PROTECTION.

c) The cord anchorage of a POWER SUPPLY CORD shall be so designed that the cord is not clamped by a screw that bears directly on the cord insulation.

d) Screws, if any, that have to be operated when replacing the POWER SUPPLY CORD shall not serve to fix any component other than parts of the cord anchorage.

e) Conductors of the POWER SUPPLY CORD shall be so arranged that if the cord anchorage fails the PROTECTIVE EARTH CONDUCTOR is not subject to strain as long as the phase conductors are in contact with their terminals.

f) The cord anchorage shall prevent the POWER SUPPLY CORD from being pushed into the ME EQUIPMENT or MAINS CONNECTOR.

Compliance is checked by inspection and by the following tests:

ME EQUIPMENT, if designed for a POWER SUPPLY CORD, is tested with the cord supplied by the MANUFACTURER.

Copyright International Electrotechnical Commission
Provided by IHS Markit under license with IEC
No reproduction or networking permitted without license from IHS Not for Resale, 08/26/2020 19:12:41 MDT

The POWER SUPPLY CORD conductors are, if possible, disconnected from the terminals or from the MAINS CONNECTOR.

The cord is subjected 25 times to a pull on the sheath of the value shown in Table 18. The pulls are applied in the most unfavourable direction without jerks, each time for 1 s.

Immediately afterwards, the cord is subjected for 1 min to a torque of the value shown in Table 18.

Table 18 – Testing of cord anchorages

Mass (*m*) of ME EQUIPMENT kg	**Pull** N	**Torque** Nm
$m \leq 1$	30	0,1
$1 < m \leq 4$	60	0,25
$m > 4$	100	0,35

A cord anchorage that allows the cord sheath to be longitudinally displaced by more than 2 mm or the conductor ends to move over a distance of more than 1 mm from their normally connected position is considered to fail.

CREEPAGE DISTANCES and AIR CLEARANCES that are reduced below the values specified in 8.9 constitutes a failure.

Attempt to push the cord into the ME EQUIPMENT or the MAINS CONNECTOR. If the cord can be pushed into the ME EQUIPMENT or the MAINS CONNECTOR to such an extent that the cord or internal parts are damaged, the cord anchorage is considered to fail.

8.11.3.6 * Cord guards

POWER SUPPLY CORDS of other than STATIONARY ME EQUIPMENT shall be protected against excessive bending at the inlet opening of the equipment or of the MAINS CONNECTOR by means of a cord guard of insulating material or by means of an appropriately shaped opening in the ME EQUIPMENT.

Compliance is checked by inspection and by either the test described in IEC 60335-1:2001, subclause 25.14 or the following test. An arrangement that passes either test is considered to comply with the requirement.

ME EQUIPMENT having a cord guard or opening is so placed that the axis of the cord guard, where the cord leaves it, projects at an angle of 45° when the cord is free from stress. A mass equal to 10 x D^2 gram is then attached to the free end of the cord, where D is the overall diameter of, or for flat cords, the minor overall dimension of the POWER SUPPLY CORD in millimetres.

If the cord guard is of temperature-sensitive material, the test is made at 23 °C ± 2 °C.

Flat cords are bent in the plane of least resistance.

If the radius of curvature of the cord, immediately after the mass has been attached, is anywhere less than 1,5 x D, the cord guard is considered to fail.

8.11.4 MAINS TERMINAL DEVICES

8.11.4.1 * General requirements for MAINS TERMINAL DEVICES

PERMANENTLY INSTALLED ME EQUIPMENT and ME EQUIPMENT having a non-DETACHABLE POWER SUPPLY CORD that is replaceable by SERVICE PERSONNEL shall be provided with MAINS TERMINAL DEVICES that ensure reliable connection.

Copyright International Electrotechnical Commission
Provided by IHS Markit under license with IEC
No reproduction or networking permitted without license from IHS Not for Resale, 08/26/2020 19:12:41 MDT

Reliance shall not be placed upon the terminals alone to maintain the conductors in position, unless barriers are provided such that CREEPAGE DISTANCES and AIR CLEARANCES that serve as a MEANS OF PROTECTION cannot be reduced to less than the values specified in 8.9, if any conductor breaks away. See also 8.10.2.

Terminals of components other than terminal blocks may be used as terminals intended for external conductors if they comply with the requirements of this subclause and are properly marked according to 7.3.7.

Screws and nuts that clamp external conductors shall not serve to fix any other component, except that they may also clamp internal conductors if these are so arranged that they are unlikely to be displaced when fitting the supply conductors.

Compliance is checked by inspection.

8.11.4.2 Arrangement of MAINS TERMINAL DEVICES

a) * For ME EQUIPMENT with rewirable cords where terminals are provided for the connection of external cords or POWER SUPPLY CORDS, these terminals together with any PROTECTIVE EARTH TERMINAL shall be closely grouped, so as to provide a convenient means of connection.

   Compliance is checked by inspection.

b) For details of PROTECTIVE EARTH CONDUCTOR connections, see 8.6.

c) For marking of MAINS TERMINAL DEVICES, see 7.3.

d) MAINS TERMINAL DEVICES shall not be accessible without the use of a TOOL.

   Compliance is checked by inspection.

e) MAINS TERMINAL DEVICES shall be so located or shielded that, if a wire of a stranded conductor escapes when the conductors are fitted, short circuiting a MEANS OF PROTECTION is unlikely.

   Compliance is checked by inspection and, if necessary, by the following test:

   The end of a flexible conductor having the NOMINAL cross-sectional area specified in Table 17 is stripped of its insulation for a length of 8 mm.

   A single wire of the stranded conductor is left free and the rest of the conductor is secured to the terminal.

   The free wire is bent in every possible direction without pulling back the insulating sheath and without making sharp bends around partitions.

   Contact between the free wire and any other part such that a MEANS OF PROTECTION is short circuited constitutes a failure.

8.11.4.3 Fixing of mains terminals

Terminals shall be FIXED such that, when the means for clamping the conductors are tightened or loosened, the internal wiring is not subjected to stress and CREEPAGE DISTANCES and AIR CLEARANCES are not reduced below the values specified in 8.9.

Compliance is checked by inspection and by measurement after fastening and loosening a conductor of the largest cross-sectional area specified 10 times.

Copyright International Electrotechnical Commission
Provided by IHS Markit under license with IEC
No reproduction or networking permitted without license from IHS Not for Resale, 08/26/2020 19:12:41 MDT

8.11.4.4 * Connections to mains terminals

Terminals with clamping means for a rewirable flexible cord shall not require special preparation of the conductors in order to effect correct connection, and they shall be so designed or placed that the conductors are not damaged and cannot slip out when the clamping means are tightened. See also 8.10.2.

Compliance is checked by inspection of the terminals and of the conductors after the test of 8.11.3.4.

8.11.4.5 Accessibility of the connection

The space inside ME EQUIPMENT designed for FIXED wiring or a rewirable POWER SUPPLY CORD shall be adequate to allow conductors to be easily introduced and connected, and covers, if any, to be fitted without damage to the conductors or their insulation. It shall be possible to check that the conductors are correctly connected and positioned before the ACCESS COVER is fitted. See also 8.10.5.

Compliance is checked by inspection and by an installation test.

8.11.5 * Mains fuses and OVER-CURRENT RELEASES

A fuse or OVER-CURRENT RELEASE shall be provided in each supply lead for CLASS I ME EQUIPMENT and for CLASS II ME EQUIPMENT having a functional earth connection according to 8.6.9, and in at least one supply lead for other single-phase CLASS II ME EQUIPMENT, except that:

– for PERMANENTLY INSTALLED ME EQUIPMENT, the neutral conductor shall not be fused;

– if examination shows that two MEANS OF PROTECTION are present between all parts of opposite polarity within the MAINS PART, and between all parts of the MAINS PART and earth, then the fuses or OVER-CURRENT RELEASES may be omitted. These insulation requirements shall be continued up to and within any component. The effect of short-circuit fault conditions in other circuits shall be ~~considered~~ VERIFIED before eliminating fuses or OVER-CURRENT RELEASES.

A PROTECTIVE EARTH CONDUCTOR shall not incorporate a fuse or OVER-CURRENT RELEASE.

Protective devices shall ~~have adequate breaking capacity to interrupt the maximum fault current (including short-circuit current) which can flow~~ be of a breaking capacity based on the MANUFACTURER'S expectation of the highest branch circuit current and/or prospective short circuit current.

~~NOTE If fuses complying with IEC 60127[20)] are used and the prospective short-circuit current exceeds 35 A or 10 times the current rating of the fuse, whichever is greater, the fuses should have high breaking capacity (1 500 A).~~

Justification for omission of fuses or OVER-CURRENT RELEASES shall be ~~included in the RISK MANAGEMENT FILE~~ documented.

Compliance is checked by inspection of the ME EQUIPMENT and the ~~RISK MANAGEMENT FILE~~ MANUFACTURER'S documentation.

8.11.6 Internal wiring of the MAINS PART

a) Internal wiring in a MAINS PART between the MAINS TERMINAL DEVICE or the APPLIANCE INLET and the protective devices shall have a cross-sectional area not less than the minimum required for the POWER SUPPLY CORD as specified in 8.11.3.3.

Compliance is checked by inspection.

~~20) IEC 60127 series, *Miniature fuses*~~

Copyright International Electrotechnical Commission
Provided by IHS Markit under license with IEC
No reproduction or networking permitted without license from IHS
Not for Resale, 08/26/2020 19:12:41 MDT

b) The cross-sectional area of other wiring in the MAINS PART and the sizes of tracks on printed wiring circuits of ME EQUIPMENT shall be sufficient to prevent fire in case of possible fault currents.

When necessary, compliance is checked by connecting the ME EQUIPMENT to a specified SUPPLY MAINS from which the most unfavourable short-circuit current expected can be drawn in the event of a fault in the MAINS PART. Subsequently, a fault in a single insulation in the MAINS PART is simulated so that the fault current is the least favourable. The occurrence of any HAZARDOUS SITUATIONS listed in 13.1.2 constitutes a failure.

9 * Protection against MECHANICAL HAZARDS of ME EQUIPMENT and ME SYSTEMS

9.1 MECHANICAL HAZARDS of ME EQUIPMENT

For general requirements on design and manufacture of ME EQUIPMENT, see Clause 4 and 15.3.

Table 19 identifies the subclauses that address the MECHANICAL HAZARDS.

Table 19 – MECHANICAL HAZARDS covered by this clause

MECHANICAL HAZARD	Covered by subclause
Crushing HAZARD	9.2, 9.4 and 9.8
Shearing HAZARD	9.2 and 9.8
Cutting or severing HAZARD	9.2, 9.3 and 9.8
Entanglement HAZARD	9.2
Trapping HAZARD	9.2
Stabbing or puncturing HAZARD	9.2, 9.3 and 9.8
Friction or abrasion HAZARD	9.2 and 9.3
Expelled parts HAZARD	9.5
High pressure fluid ejection HAZARD	9.7
Falling HAZARD	9.8
Instability HAZARD	9.4
Impact HAZARD	9.2 and 9.8
Moving and positioning of PATIENT	9.2 and 9.4
Vibration and noise	9.6

9.2 * MECHANICAL HAZARDS associated with moving parts

9.2.1 * General

ME EQUIPMENT with moving parts shall be designed, built and laid out so that, when PROPERLY INSTALLED and used as indicated in the ACCOMPANYING DOCUMENTS or under reasonably foreseeable misuse, the RISKS associated with those moving parts are reduced to an acceptable level.

The RISK from contact with the moving parts shall be reduced to an acceptable level by use of ~~protective~~ RISK CONTROL measures, bearing in mind the ease of access, the ME EQUIPMENT'S function, the shape of the parts, the energy and speed of the motion and the benefits to the PATIENT.

The RESIDUAL RISK associated with moving parts is considered acceptable if exposure is needed for the ME EQUIPMENT to perform its intended function~~. If after all reasonable protective measures have been implemented HAZARDS persist, warnings shall be marked on the~~

Copyright International Electrotechnical Commission
Provided by IHS Markit under license with IEC
No reproduction or networking permitted without license from IHS
Not for Resale, 08/26/2020 19:12:41 MDT

~~ME EQUIPMENT or given in the instructions for use~~, and RISK CONTROL measures have been implemented (e.g. warnings).

NOTE 1 Requirements for parts subject to wear are found in 15.2.

NOTE 2 See ISO 14971:2019, subclauses 7.1 and 7.4.

9.2.2 TRAPPING ZONE

9.2.2.1 General

Where feasible, ME EQUIPMENT with a TRAPPING ZONE shall comply with the requirements of one or more of the following:

– gaps as specified in 9.2.2.2; or

– safe distances as specified in 9.2.2.3; or

– GUARDS and ~~protective~~ other RISK CONTROL measures as specified in 9.2.2.4; or

– continuous activation as specified in 9.2.2.5.

If implementation of the above ~~protective~~ RISK CONTROL measures would be inconsistent with the INTENDED USE of the ME EQUIPMENT or the ME SYSTEM, control of the relevant motion shall comply with 9.2.2.6.

9.2.2.2 Gaps

A TRAPPING ZONE is considered not to present a MECHANICAL HAZARD if the gaps of the TRAPPING ZONE comply with the dimensions specified in Table 20.

NOTE In general the values for adults should be used. However, in the case of devices specifically designed for use with children, the dimensions given for children should be applied.

9.2.2.3 Safe distances

A TRAPPING ZONE is considered not to present a MECHANICAL HAZARD if the distances separating the OPERATOR, PATIENT and other persons from the TRAPPING ZONES exceed the values specified in ~~ISO 13852~~ ISO:13857:2008. The distances are measured from the expected positions of the OPERATOR, PATIENT and other persons near the ME EQUIPMENT in NORMAL USE or under reasonably foreseeable misuse.

9.2.2.4 * GUARDS and ~~protective~~ other RISK CONTROL measures

9.2.2.4.1 Access to TRAPPING ZONES

A TRAPPING ZONE is considered not to present a MECHANICAL HAZARD if GUARDS ~~and protective~~ or other RISK CONTROL measures (e.g. electro-mechanical):

– are of robust construction;

– are not easy to bypass or render non-operational;

– do not introduce any additional unacceptable RISK.

NOTE RISK CONTROL measures (e.g. electro-mechanical) addressed by this subclause are intended to include collision detection or collision avoidance systems, such as those employing light barrier(s) and similar feedback control(s).

Compliance is checked by the applicable tests of 15.3 for ENCLOSURES.

9.2.2.4.2 FIXED GUARDS

FIXED GUARDS shall be securely held in place by systems that cannot be dismantled without the use of a TOOL.

Compliance is checked by inspection.

Copyright International Electrotechnical Commission
Provided by IHS Markit under license with IEC
No reproduction or networking permitted without license from IHS
Not for Resale, 08/26/2020 19:12:41 MDT

Table 20 – Acceptable gaps [a]

Part of body	Adult gap *a* mm	Children gap *a* mm	Illustration
Body	>500	>500	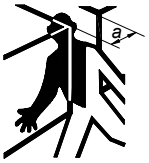
Head	>300 or <120	>300 or <60	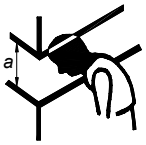
Leg	>180	>180	
Foot	>120 or <35	>120 or <25	
Toes	>50	>50	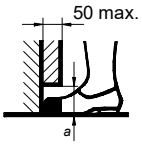
Arm	>120	>120	
Hand, wrist, fist	>100	>100	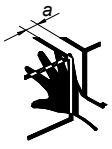
Finger	> 25 or < 8	> 25 or < 4	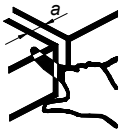
[a] The values in this table are taken from ~~ISO 13852:1996~~ ISO13857:2008.			

Copyright International Electrotechnical Commission
Provided by IHS Markit under license with IEC
No reproduction or networking permitted without license from IHS
Not for Resale, 08/26/2020 19:12:41 MDT

9.2.2.4.3 Movable GUARDS

Movable GUARDS that can be opened without the use of a TOOL:

– shall remain attached to the ME EQUIPMENT when the GUARD is open;

– shall be associated with an interlock device that prevents the relevant moving parts from starting to move while the TRAPPING ZONE is accessible and stops movement when the GUARD is opened;

– shall be so designed that the absence or failure of one of their components prevents starting, and stops moving parts.

Compliance is checked by inspection of the ME EQUIPMENT and by conducting any applicable tests ~~and inspection of the ME EQUIPMENT and the RISK MANAGEMENT FILE~~.

9.2.2.4.4 ~~Protective~~ Other RISK CONTROL measures

Protective measures shall be designed and incorporated into the control system so that:

– moving parts cannot start to move while they are in the reach of persons;

~~– once the ME EQUIPMENT has started to move, the TRAPPING ZONE cannot be reached, or, if the TRAPPING ZONE is reached, system movement must stop. In the later case, no HAZARD or damage shall result;~~

~~– if in a SINGLE FAULT CONDITION of the protective measure, an unacceptable RISK could arise, one or more emergency stopping device(s) in the ME EQUIPMENT shall be provided (see 9.2.4).~~

~~*Compliance is checked by inspection of the ME EQUIPMENT and the RISK MANAGEMENT FILE.*~~

Other RISK CONTROL measures (e.g. electro-mechanical) shall be designed and incorporated into the control system so that:

– once the ME EQUIPMENT has started to move, if the TRAPPING ZONE is reached, system movement shall stop; and

– if the RISK CONTROL measure is defeated in a SINGLE FAULT CONDITION, a second RISK CONTROL measure shall be provided, such as one or more emergency stopping device(s) (see 9.2.4), or the ME EQUIPMENT shall otherwise be SINGLE FAULT SAFE (see 4.7).

Compliance is checked by the following as necessary:

– *inspection of the ME EQUIPMENT;*

– *examination of the construction and circuits;*

– *conducting any applicable tests including, if necessary, tests under SINGLE FAULT CONDITION.*

9.2.2.5 * Continuous activation

Where it is impractical to make the TRAPPING ZONE inaccessible, continuous activation may be used as a RISK CONTROL measure.

A TRAPPING ZONE is not considered to present a MECHANICAL HAZARD if:

a) the movement is in the OPERATOR'S field of view;

Compliance is checked by inspection.

b) movement of the ME EQUIPMENT or its parts is possible only by the continuous activation of the control by the OPERATOR as long as the response of the OPERATOR to deactivate the device can be relied on to prevent HARM;

Copyright International Electrotechnical Commission
Provided by IHS Markit under license with IEC
No reproduction or networking permitted without license from IHS
Not for Resale, 08/26/2020 19:12:41 MDT

NOTE Manually operated movements are also considered to comply with this clause, as long as mass and velocity allow adequate control of positioning without causing an unacceptable RISK.

Compliance is checked by inspection.

~~c) in a SINGLE FAULT CONDITION of the continuous activation system an unacceptable RISK could arise, one or more emergency stopping device(s) are provided in the ME EQUIPMENT (see 9.2.4).~~

~~*Compliance is checked by inspection of the ME EQUIPMENT and the RISK MANAGEMENT FILE.*~~

c) the continuous activation system is defeated in a SINGLE FAULT CONDITION, then a second RISK CONTROL measure shall be provided, such as one or more emergency stopping device(s) (see 9.2.4), or the ME EQUIPMENT shall otherwise be SINGLE FAULT SAFE (see 4.7).

Compliance is checked by the following as necessary:

– *inspection of the ME EQUIPMENT;*
– *examination of the construction and circuits;*
– *conducting any applicable tests including, if necessary, tests under SINGLE FAULT CONDITION.*

9.2.2.6 * Speed of movement(s)

The speed of movement(s) that position parts of the ME EQUIPMENT or PATIENT, where contact with the ME EQUIPMENT could result in ~~a HAZARDOUS SITUATION~~ an unacceptable RISK, shall be limited so that the OPERATOR will have adequate control of ~~positioning without resulting in an unacceptable RISK~~ the movement.

The overtravel (stopping distance) of such movement, occurring after operation of a control to stop the movement, shall not result in an unacceptable RISK.

~~*Compliance is checked by inspection of the ME EQUIPMENT and the RISK MANAGEMENT FILE.*~~

Compliance is checked by the following as necessary:

– *inspection of the overtravel (stopping distance) calculations and evaluation;*
– *any functional tests.*

NOTE The overtravel (stopping distance) calculations and evaluation are part of the RISK MANAGEMENT FILE.

9.2.3 * Other MECHANICAL HAZARDS associated with moving parts

9.2.3.1 Unintended movement

Controls shall be so positioned, recessed, or protected by other means so that they cannot be accidentally actuated, ~~resulting in unacceptable RISK, unless ergonomic considerations for the intended PATIENT dictate otherwise (e.g. PATIENT with special needs)~~ unless for the intended PATIENT, the USABILITY ENGINEERING PROCESS concludes otherwise (e.g. PATIENT with special needs) or activation does not result in an unacceptable RISK.

Compliance is checked by inspection of ME EQUIPMENT, and, if the control is part of the PRIMARY OPERATING FUNCTIONS, inspection of the USABILITY ENGINEERING FILE.

9.2.3.2 Overtravel end stops

~~The RISK due to overtravel (past range limits) of ME EQUIPMENT parts shall be reduced to an acceptable level.~~ Overtravel past range limits of ME EQUIPMENT parts shall be prevented. End stops or other stopping means shall be provided to act as the ultimate travel limiting measure ~~in both NORMAL CONDITION and SINGLE FAULT CONDITION~~.

--`,,`,,`-`-`,,`,,`,`,,`---
Copyright International Electrotechnical Commission
Provided by IHS Markit under license with IEC
No reproduction or networking permitted without license from IHS
Not for Resale, 08/26/2020 19:12:41 MDT

Such means shall have the mechanical strength to withstand the intended loading in NORMAL USE and reasonably foreseeable misuse.

Compliance is checked by inspection of the ME EQUIPMENT~~, the RISK MANAGEMENT FILE, specifications of materials used and the processing specifications for these materials.~~ and the following test:

The ME EQUIPMENT is

– *loaded with the SAFE WORKING LOAD,*

– *unloaded, or*

– *loaded to any intermediate level that is likely to provide the most severe test result.*

The moving part is to be driven against each end stop or other mechanical means for the number of cycles, operating speed and test conditions as specified in Table 33. The end stops or other mechanical means required shall be capable of performing their intended function upon completion of the test.

Table 33 – Test conditions for overtravel end stop test

Construction	Number of cycles	Test condition
1. Motor driven: No range limit system provided [a]	6 000	Run at maximum speed
2. Motor driven: Non-independent range limit system or systems provided [a, b]	50	Defeat all switches simultaneously, and run at maximum speed
3. Motor driven: Two or more independent range limit systems [a, b]	1	Defeat all switches simultaneously, and run at maximum speed
4. Manually driven or manually driven, power assisted	50	Run at any speed, including reasonably foreseeable misuse

[a] A range limit system consists of all components required to stop motion, for example, it may consist of (1) a limit switch, (2) sensing circuits, and (3) related mechanical actuating mechanism.

[b] To qualify as an independent range limit system, each system shall, in addition to the criteria in footnote [a], comply with both of the following:

1. the system is capable of de-energizing the motor(s) directly; that is, the switch or motor controller circuit interrupts the motor's rotor or stator current, or both, and
2. the system provides a means by which a malfunction of one range limit system is made obvious to the OPERATOR. This may be an audible, visual or otherwise discernible indicator.

9.2.4 * Emergency stopping devices

Where it is considered necessary to have one or more emergency stopping device(s), the emergency stopping device shall comply with all the following requirements.

a) The emergency stopping device shall reduce the RISK to an acceptable level.

b) The proximity and response of the OPERATOR to actuate the emergency stopping device can be relied on to prevent HARM.

c) The emergency stopping device actuator shall be readily accessible to the OPERATOR.

d) Emergency stopping device(s) shall not be part of the normal operation of the ME EQUIPMENT.

e) Operation of an emergency switching or stopping means shall neither introduce a further MECHANICAL HAZARD nor interfere with the complete operation necessary to remove the original HAZARD.

Copyright International Electrotechnical Commission
Provided by IHS Markit under license with IEC
No reproduction or networking permitted without license from IHS
Not for Resale, 08/26/2020 19:12:41 MDT

f) Emergency stopping device(s) shall be able to break the full load of the relevant circuit, taking into account possible stalled motor currents and the like.

g) Means for stopping of movements shall operate as a result of one single action.

h) The emergency stopping device shall have an actuator coloured red designed to be distinctive and easily identifiable from that of other controls.

i) An actuator that interrupts/opens mechanical movements shall be marked on, or immediately adjacent to, the face of the actuator with symbol IEC 60417-5638 (~~DB:~~2002-10) (see Table D.1, symbol 18) or the word "STOP".

NOTE If the actuator is a switch that interrupts all power, compliance with the above marking requirement is not required.

j) The emergency stopping device, once actuated, shall maintain the ME EQUIPMENT in the disabled condition until a deliberate action, different from that used to actuate it, is performed.

k) The emergency stopping device shall be shown to be suitable for its application.

Compliance is checked by inspection of the ME EQUIPMENT and the RISK MANAGEMENT FILE, and by functional tests.

9.2.5 * Release of PATIENT

Means shall be provided to permit the release of the PATIENT quickly and safely in the event of breakdown of the ME EQUIPMENT or failure of the power supply (see 11.8), activation of a ~~protective~~ RISK CONTROL measure or emergency stopping. Special attention shall be given to the following.

– Uncontrolled or unintended movement of the ME EQUIPMENT that could result in an unacceptable RISK shall be prevented.
– Situations where the PATIENT is subjected to unacceptable RISKS due to the proximity of moving parts, removal of normal exit routes, or other HAZARDS, shall be prevented.
– When, after removal of counterbalanced parts, other parts of the ME EQUIPMENT can move in a hazardous way, measures shall be provided to reduce the RISK to an acceptable level.

Compliance is checked by inspection of the ME EQUIPMENT and the RISK MANAGEMENT FILE, and by functional tests.

9.3 * MECHANICAL HAZARD associated with surfaces, corners and edges

Rough surfaces, sharp corners and edges of ME EQUIPMENT that could ~~result in an unacceptable RISK~~ cause injury or damage shall be avoided or covered.

In particular, attention shall be paid to flange or frame edges and the removal of burrs.

Compliance is checked by inspection of the ME EQUIPMENT ~~and the RISK MANAGEMENT FILE~~.

NOTE 1 If inspection is insufficient to determine sharpness of edges or burrs, the rationale for 9.3 provides a reference to an optional functional test.

NOTE 2 A sharp edge MECHANICAL HAZARD could cut wire insulation which could lead to an electrical HAZARD. This requirement is intended to cover all these HAZARDS.

9.4 * Instability HAZARDS

9.4.1 General

ME EQUIPMENT and its parts, other than FIXED ME EQUIPMENT ~~and HAND-HELD ME EQUIPMENT~~, intended to be placed on a surface such as a floor or a table in NORMAL USE shall not

Copyright International Electrotechnical Commission
Provided by IHS Markit under license with IEC
No reproduction or networking permitted without license from IHS Not for Resale, 08/26/2020 19:12:41 MDT

overbalance (tip over) or move unexpectedly~~, to the degree that it could present an unacceptable RISK to the PATIENT, OPERATOR or other person~~.

NOTE ~~The meaning of transport in this subclause is moving ME EQUIPMENT from room to room during NORMAL USE.~~ HAND-HELD parts of FIXED ME EQUIPMENT are intended to be tested.

Compliance is checked by the tests in 9.4.2 to 9.4.4 (inclusive). Each test is performed separately.

9.4.2 * Instability – overbalance

9.4.2.1 Instability in transport position

ME EQUIPMENT or its parts shall not overbalance when placed in any transport position of NORMAL USE on a plane inclined at an angle of 10° from the horizontal plane.

NOTE The meaning of transport in this subclause is moving ME EQUIPMENT from room to room during NORMAL USE.

Compliance is checked by the following test:

Prior to the test the ME EQUIPMENT is prepared as indicated in the ACCOMPANYING DOCUMENTS (or, if not specified, as in 9.4.2.2). The ME EQUIPMENT or its parts is placed on a plane inclined at an angle 10° from the horizontal plane. If the ME EQUIPMENT or its parts overbalances, it constitutes a failure.

9.4.2.2 Instability excluding transport position

ME EQUIPMENT or its parts shall not overbalance when placed in any position of NORMAL USE, excluding any transport positions, on a plane inclined at an angle of 5° from the horizontal plane.

If the ME EQUIPMENT or its parts overbalances when placed in any position of NORMAL USE, excluding any transport positions, on a plane inclined at an angle of 10° from the horizontal plane, it shall carry a warning notice stating that transport should only be undertaken in a certain condition that shall be clearly described in the instructions for use or marked on the ME EQUIPMENT with an indication of the RESIDUAL RISK if the ME EQUIPMENT or its parts overbalances.

NOTE For warning notice requirements, see 7.9.2.2.

Compliance is checked by the following test:

Prior to conducting the test, the ME EQUIPMENT is prepared as follows:

a) *ME EQUIPMENT is provided with all specified connection leads, the POWER SUPPLY CORD and any interconnecting cords. It is provided with the least favourable combination of possible detachable parts, ACCESSORIES and load as specified in NORMAL USE.*

b) *ME EQUIPMENT having an APPLIANCE INLET is provided with the specified DETACHABLE POWER SUPPLY CORD.*

c) *The connection leads are laid down on the inclined plane in the position most unfavourable for stability.*

d) *If castors/wheels are present, they are temporarily immobilized, if necessary by blocking, in their most disadvantageous position.*

e) *Doors, drawers, shelves and the like are placed in the most disadvantageous position and fully loaded or unloaded whichever represents "worst case" as specified in NORMAL USE according to the ACCOMPANYING DOCUMENTS.*

f) *ME EQUIPMENT having containers for liquids is tested with these containers completely or partly filled or empty, whichever is least favourable.*

--`,```,,,,,,,,,,```-`-`,,`,,`,`,,`---
Copyright International Electrotechnical Commission
Provided by IHS Markit under license with IEC
No reproduction or networking permitted without license from IHS
Not for Resale, 08/26/2020 19:12:41 MDT

g) *The ME EQUIPMENT is not connected to the SUPPLY MAINS.*

The test floor surface is to be hard and flat (e.g. concrete floor covered with 2 mm to 4 mm thick vinyl flooring material).

The ME EQUIPMENT or the ME EQUIPMENT parts is placed on a plane inclined at an angle of 10° from the horizontal plane, or, if a warning notice is present, compliance is checked by inspection of the warning notice and the ME EQUIPMENT or its parts is placed on a plane inclined at an angle of 5° from the horizontal plane. If the ME EQUIPMENT or its parts overbalances, it constitutes a failure.

9.4.2.3 Instability from horizontal and vertical forces

a) ~~ME EQUIPMENT having a mass of 25 kg or more, other than FIXED ME EQUIPMENT that is intended to be used on the floor, shall not overbalance due to pushing, leaning, resting etc.~~

~~Surfaces of the ME EQUIPMENT where a RISK of overbalancing the ME EQUIPMENT exists from pushing, leaning, resting etc., shall be permanently marked with a CLEARLY LEGIBLE warning of this RISK, e.g. by use of safety sign ISO 7010-P017 (see Table D.2, safety sign 5).~~

* ME EQUIPMENT or its parts having a mass of 25 kg or more other than FIXED ME EQUIPMENT that is intended to be used on the floor shall be permanently marked with a CLEARLY LEGIBLE warning of this RISK, e.g. by use of SAFETY SIGN ISO 7010-P017 (see Table D.2, SAFETY SIGN 5), or it shall not overbalance due to being pushed, leaned, rested upon etc.

If marking is provided because the ME EQUIPMENT overbalances, the marking shall be visible during NORMAL USE, but not on surfaces for which pushing is associated with NORMAL USE (e.g. surfaces with handles).

Compliance is checked by inspection ~~and~~ of the marking provided or the following test:

Prior to the test, the ME EQUIPMENT is prepared as described in 9.4.2.2. The ME EQUIPMENT is placed on a horizontal plane and a force equal to ~~25~~ 15 % of its weight, but not more than ~~220~~ 150 N, is applied in any direction, except a direction having an upward component. Unless otherwise marked, the force is applied at any point of the ME EQUIPMENT but not exceeding 1,5 m from the floor. The ME EQUIPMENT is prevented from sliding on the floor by a horizontal obstruction, not exceeding 20 mm height, which is fastened flat on the floor. If the application of the test force results in lateral movement of the ME EQUIPMENT, increase the height of the obstruction to the minimum extent necessary to prevent lateral movement. ~~If the ME EQUIPMENT overbalances, it constitutes a failure.~~ ME EQUIPMENT without marking shall not overbalance.

b) ~~ME EQUIPMENT, other than FIXED ME EQUIPMENT, that is intended to be used on the floor or on a table, shall not overbalance due to sitting or stepping unless a legible warning of this RISK is provided on the ME EQUIPMENT, e.g. by use of safety signs ISO 7010-P018 or ISO 7010-P019 as appropriate (see Table D.2, safety signs 6 and 7).~~

ME EQUIPMENT or its parts, other than FIXED ME EQUIPMENT, that is intended to be used on the floor or on a table shall be permanently marked with a CLEARLY LEGIBLE warning of this RISK, e.g. by use of SAFETY SIGNS ISO 7010-P018 or ISO 7010-P019 as appropriate (see Table D.2, SAFETY SIGNS 6 and 7), or it shall not overbalance due to being sat or stepped upon.

NOTE Requirements for PATIENT support surfaces are found in 9.8.3.

If marking is provided because the ME EQUIPMENT overbalances, the marking shall be visible during potential stepping or sitting misuse.

Compliance is checked by inspection ~~and~~ of the marking provided or by the following test:

Copyright International Electrotechnical Commission
Provided by IHS Markit under license with IEC
No reproduction or networking permitted without license from IHS
Not for Resale, 08/26/2020 19:12:41 MDT

Prior to the test the ME EQUIPMENT is prepared as described in 9.4.2.2. The ME EQUIPMENT is placed on a horizontal plane and a constant downward force of 800 N is applied at the point of maximum moment to any working surface, excluding PATIENT support surfaces, offering an obvious foothold or sitting surface of a minimum 20 cm by 20 cm area, and at a height not exceeding 1 m from the floor. ~~Overbalancing constitutes a failure.~~ ME EQUIPMENT without marking shall not overbalance.

9.4.2.4 * Castors and wheels

9.4.2.4.1 General

The means used for transportation of MOBILE ME EQUIPMENT, e.g. castors or wheels, shall not result in an unacceptable RISK when the MOBILE ME EQUIPMENT is moved or parked in NORMAL USE.

9.4.2.4.2 Force for propulsion

The force required for moving MOBILE ME EQUIPMENT along a hard and flat horizontal surface shall not exceed 200 N unless the instructions for use state that more than one person is needed.

Compliance is checked by placing the ME EQUIPMENT on a hard flat horizontal floor (e.g. concrete floor covered with 2 mm to 4 mm thick vinyl flooring material) and measuring the force needed to propel the ME EQUIPMENT at a speed of 0,4 m/s ± 0,1 m/s. The force is applied at a height of 1 m above the floor or at the highest point on the ME EQUIPMENT if its height is less than 1 m.

9.4.2.4.3 * Movement over a threshold

MOBILE ME EQUIPMENT exceeding 45 kg shall be able to pass over a ~~20~~ 10 mm threshold. Passing over a ~~20~~ 10 mm threshold shall not result in ~~an unacceptable RISK~~ overbalancing.

Compliance is checked by the following test:

The ME EQUIPMENT is configured in transport position with any SAFE WORKING LOAD *in place as indicated in the* ACCOMPANYING DOCUMENTS. *The ME EQUIPMENT is moved as in NORMAL USE 10 times in forward direction over (up and down) a solid vertical plane obstruction ~~with a rectangular cross-section, 20 mm high and 80 mm wide~~ that is affixed flat on the floor. The obstruction shall have a rectangular cross section of 10 mm ± 0,5 mm high and at least 80 mm wide with a radius of 2 mm ± 0,1 mm at the top edges. The method of passing over the obstruction has to be applied in accordance with the instructions in the ACCOMPANYING DOCUMENTS, or if no instructions are given, by the following test.*

All wheels and castors are to impact the obstruction at a speed of ~~0,4~~ 0,8 m/s ± 0,1 m/s for manual MOBILE ME EQUIPMENT, or, for motor driven MOBILE ME EQUIPMENT, the maximum speed capable of being maintained. Manual MOBILE ME EQUIPMENT is propelled by a force acting at its handle.

It is unacceptable for ME EQUIPMENT to be unable to go over (up) the obstruction (due to small wheel diameter, for example). Overbalancing ~~or any unacceptable RISK~~ constitutes a failure. BASIC SAFETY and ESSENTIAL PERFORMANCE shall be maintained.

~~*Unacceptable RISK is determined by inspection of the ME EQUIPMENT, its parts, and the RISK MANAGEMENT FILE.*~~

NOTE Examples of damage that can ~~result in unacceptable RISK~~ affect BASIC SAFETY include the reduction of CREEPAGE DISTANCES and AIR CLEARANCES below those specified in 8.9, access to parts which exceed limits in 8.4, or access to moving parts which could cause HARM.

Assessment criteria that can be useful in determining if this test has resulted in ~~an unacceptable RISK~~ a loss of BASIC SAFETY include:

– those in Clause ~~9~~ 8 and 11.6;

– the dielectric strength test as specified in 8.8.3 to evaluate the integrity of solid ~~SUPPLEMENTARY or REINFORCED INSULATION~~ insulation providing a MEANS OF PROTECTION; and

Copyright International Electrotechnical Commission
Provided by IHS Markit under license with IEC
No reproduction or networking permitted without license from IHS
Not for Resale, 08/26/2020 19:12:41 MDT

– measurement of CREEPAGE DISTANCES or AIR CLEARANCES to compare the values with the minimum distances specified in 8.9. Small chips that do not adversely affect the protection against electric shock or moisture can normally be ignored.

9.4.3 * Instability from unwanted lateral movement (including sliding)

9.4.3.1 Instability in transport position

a) Brakes of power-driven MOBILE ME EQUIPMENT shall be designed so that they are normally activated and can only be released by continuous actuation of a control.

Compliance is checked by inspection.

b) MOBILE ME EQUIPMENt shall be fitted with means (such as locking devices) intended to prevent any unwanted movement of the ME EQUIPMENT or its parts in the transport position.

Compliance is checked by inspection.

c) ~~MOBILE ME EQUIPMENT that is intended to be used on the floor shall not result in an unacceptable RISK due to unwanted lateral movement.~~
* MOBILE ME EQUIPMENT shall be provided with wheel locks or with a braking system to prevent unwanted movement on an incline of 10° when in its transport position.

Compliance is checked by the following test:

Prior to the test, the ME EQUIPMENT is prepared as described in ~~9.4.2.2~~ 9.4.2.1. The MOBILE ME EQUIPMENT is placed in its transport position (or in the worst case NORMAL USE position) with the SAFE WORKING LOAD in place, and the locking device (e.g. brakes) activated, on a hard flat surface inclined at 10° from the horizontal plane. If castors are incorporated, they are positioned in their worst-case position. Following the initial elastic movement, initial creepage, and initial pivoting of castors, any further movement of the MOBILE ME EQUIPMENT greater than 50 mm (in relation to the inclined plane) constitutes a failure. ~~The RISK due to any initial movement is assessed, taking into account the NORMAL USE of the ME EQUIPMENT.~~

9.4.3.2 Instability excluding transport position

a) MOBILE ME EQUIPMENT shall be provided with wheel locks or with a braking system ~~appropriate to the intended modes of use and sufficient to ensure that unintended movement is prevented on an incline of 5°~~ to prevent unwanted movement on an incline of 5° when in any position excluding transport position.

Compliance is checked by the following test:

Prior to the test, the ME EQUIPMENT is prepared as described in 9.4.2.2. The MOBILE ME EQUIPMENT with the SAFE WORKING LOAD in place is positioned on a hard flat surface inclined at an angle of 5° from the horizontal plane with wheels locks on or braking system activated. Following the initial elastic movement, initial creepage, and initial pivoting of castors, any further movement of the ME EQUIPMENT greater than 50 mm (in relation to the inclined surface) constitutes a failure. ~~The RISK due to any initial movement is assessed taking into account the NORMAL USE of the ME EQUIPMENT.~~

b) ~~TRANSPORTABLE or STATIONARY ME EQUIPMENT that is intended to be used on the floor shall not result in an unacceptable RISK due to unwanted lateral movement.~~ MOBILE ME EQUIPMENT shall be provided with wheel locks or with a braking system to prevent unwanted movement from lateral forces.

Compliance is checked by the following test:

Prior to the test, the ME EQUIPMENT is prepared as described in 9.4.2.2. The ME EQUIPMENT is placed on a horizontal plane with the SAFE WORKING LOAD in place, and the locking device (e.g. brakes) activated. If castors are incorporated, they are positioned in their

Copyright International Electrotechnical Commission
Provided by IHS Markit under license with IEC
No reproduction or networking permitted without license from IHS
Not for Resale, 08/26/2020 19:12:41 MDT

worst-case position. A force equal to ~~25~~ 15 % of the weight of the unit, but not more than ~~220~~ 150 N, is applied in any direction, except a direction having an upwards component, at the highest point of the ME EQUIPMENT that does not lead to overbalancing but not exceeding 1,5 m from the floor. Following the initial elastic movement, initial creepage, and initial pivoting of castors, any further movement of the ME EQUIPMENT greater than 50 mm (in relation to the horizontal plane) constitutes a failure. ~~The RISK due to any initial movement is assessed, taking into account the NORMAL USE of the ME EQUIPMENT.~~

9.4.4 Grips and other handling devices

a) ME EQUIPMENT other than PORTABLE ME EQUIPMENT or its part with a mass of more than 20 kg that needs to be lifted in NORMAL USE or transport shall either be provided with suitable handling devices (for example handles, lifting eyes, etc.) or the ACCOMPANYING DOCUMENTS shall indicate the points where it can be lifted safely, unless the method of handling is obvious and no ~~HAZARDS~~ unacceptable RISK can develop when this is done. If the means for lifting are handles, they shall be suitably placed to enable the ME EQUIPMENT or its part to be carried by two or more persons.

Compliance is checked by weighing (if necessary) and by inspection of the ME EQUIPMENT or its part or the ACCOMPANYING DOCUMENTS.

b) ME EQUIPMENT specified by the MANUFACTURER as PORTABLE ME EQUIPMENT with a mass of more than 20 kg shall have one or more carrying-handles suitably placed to enable the ME EQUIPMENT to be carried by two or more persons.

Compliance is checked by carrying.

c) Carrying handles or grips furnished on PORTABLE ME EQUIPMENT shall withstand loading as described in the following test:

The handles and their means of attachment are subjected to a force equal to four times the weight of the ME EQUIPMENT in any direction of NORMAL USE and transport.

If more than one handle is furnished on PORTABLE ME EQUIPMENT, the force is distributed between the handles. The distribution of forces is determined by measuring the percentage of the ME EQUIPMENT weight sustained by each handle with the ME EQUIPMENT in the normal carrying position. If the ME EQUIPMENT is furnished with more than one handle but is so designed that it can readily be carried by only one handle, then each handle is to be capable of sustaining the total force.

The force is applied uniformly over a 7 cm length of the handle at the centre, starting at zero and gradually increasing so that the test value will be attained in 5 s to 10 s and maintained for a period of 1 min.

Handles that break loose from the ME EQUIPMENT or exhibit any permanent distortion, cracking or other evidence of breakdown constitutes a failure.

9.5 * Expelled parts HAZARD

9.5.1 Protective means

Where expelled parts could result in an unacceptable RISK, the ME EQUIPMENT shall be provided with a means for protecting against such RISK.

Compliance is checked by assessment of the suitability of the protective means and by inspection of the RISK MANAGEMENT FILE.

9.5.2 Cathode ray tubes

Any cathode ray tube shall comply with the applicable requirements of IEC 60065:2001, Clause 18; or IEC 61965.

Copyright International Electrotechnical Commission
Provided by IHS Markit under license with IEC
No reproduction or networking permitted without license from IHS
Not for Resale, 08/26/2020 19:12:41 MDT

Compliance is checked by inspection of a certificate of compliance or by the relevant tests of IEC 60065:2001, Clause 18.

9.6 Acoustic energy (including infra- and ultrasound) and vibration

9.6.1 * General

ME EQUIPMENT shall be designed so that human exposure to acoustic energy and vibration shall not result in an unacceptable RISK.

Compliance is checked by the tests in 9.6.2 and 9.6.3, and, if necessary, by inspection of the RISK MANAGEMENT FILE (taking into account the audibility of auditory alarm signals and PATIENT sensitivity) ~~and the tests indicated in 9.6.2 and 9.6.3~~.

9.6.2 * Acoustic energy

9.6.2.1 Audible acoustic energy

In NORMAL USE, the PATIENT, OPERATOR and other persons shall not be exposed to acoustic energy from ME EQUIPMENT, except sound from auditory ALARM SIGNALS, exceeding the levels specified below.

– 80 dBA for a cumulative exposure of 24 h over a 24 h period; an offset of 3 dBA is to be added to this value when halving the cumulative exposure time over a 24 h period (e.g. 83 dBA for 12 h over a 24 h period);

– 140 ~~dB un-weighted~~ dBC (peak) sound pressure level for impulsive or impact acoustic energy (noise).

NOTE 1 Interpolation or extrapolation is allowed for exposure times in accordance with the following formula, $80 - 10^* \log_{10}(h/24)$, in dBA, where h is cumulative exposure time over a 24 h period.

NOTE 2 Since PATIENTS might have a higher sensitivity to acoustic energy (noise), a lower level could be more appropriate. Consideration should also be given to perception of auditory ALARM SIGNALS. The World Health Organization has recommended a maximum impulse or impact acoustic energy (noise) level for children of 120 dB.

NOTE 3 If the A-weighted sound pressure level exceeds 80 ~~dB(A)~~ dBA, noise protection measure should be considered.

NOTE 4 Acoustic energy directly associated with the INTENDED USE of the ME EQUIPMENT or ME SYSTEMS is excluded. See subclauses 1.1 and 7.2.13.

Compliance is checked by measuring the maximum A-weighted sound pressure level at the minimum distances of PATIENT, OPERATOR and other persons from the source of acoustic energy (*noise) in NORMAL USE, and if necessary, calculating the A-weighted sound pressure level produced by the ME EQUIPMENT in accordance with ISO 3746, ISO 9614-1 or IEC 61672-1. The following conditions apply.*

a) The ME EQUIPMENT is operated under worst-case NORMAL CONDITION.

b) Any protective means provided or called for in ACCOMPANYING DOCUMENTS are to be in place during sound measurement.

c) Sound level meters used in the measurement conform to IEC 61672-1 and IEC 61672-2.

d) The test room is semi-reverberant with a hard reflecting floor. The distance between any wall or other object and the surface of the ME EQUIPMENT is not less than 3 m.

e) When sound measurements in a test room are not feasible (e.g. for a large PERMANENTLY INSTALLED ME EQUIPMENT), measurements may be done in situ.

9.6.2.2 Infrasound and ultrasound energy

When applicable, the MANUFACTURER shall address the RISKS associated with infrasound or ultrasound in the RISK MANAGEMENT PROCESS.

Compliance is checked by inspection of the RISK MANAGEMENT FILE.

Copyright International Electrotechnical Commission
Provided by IHS Markit under license with IEC
No reproduction or networking permitted without license from IHS Not for Resale, 08/26/2020 19:12:41 MDT

9.6.3 * Hand-transmitted vibration

Except for vibrations directly required to carry out the INTENDED USE of the ME EQUIPMENT, means shall be provided to protect the PATIENT, OPERATOR and other persons if in NORMAL USE the hand-transmitted frequency-weighted r.m.s. acceleration generated by the ME EQUIPMENT exceeds the value below:

– 2,5 m/s^2 for a cumulative time of 8 h during a 24 h period.

– Allowable accelerations for different times are inversely proportional to the square root of the time (e.g. the allowable acceleration for 2 h would be 5,0 m/s^2).

NOTE Interpolation or extrapolation is allowed for allowable acceleration in accordance with the following formula, 2,5 x $\sqrt{(8 / t)}$, in m/s^2, where t is the cumulative time over a 24 h period.

Compliance is checked by measurements at points of equipment in hand contact with PATIENT, OPERATOR or other persons. Measurements are made in accordance with ISO 5349-1.

9.7 * Pressure vessels and parts subject to pneumatic and hydraulic pressure

9.7.1 General

The requirements of this subclause apply to vessels and parts of ME EQUIPMENT subject to pressure, the rupture of which could result in an unacceptable RISK.

The parts of a pneumatic or hydraulic system that are used as a support system shall additionally comply with the requirements in 9.8.

9.7.2 Pneumatic and hydraulic parts

Pneumatic and hydraulic parts of ME EQUIPMENT or ACCESSORIES shall be so designed that:

– no unacceptable RISK results from loss of pressure or loss of vacuum;

– no unacceptable RISK results from a fluid jet caused by leakage or a component failure;

– elements of the ME EQUIPMENT or an ACCESSORY, and especially pipes and hoses, that can lead to an unacceptable RISK shall be protected against harmful external effects;

– reservoirs and similar vessels (e.g. hydro-pneumatic accumulators) that can lead to an unacceptable RISK are automatically depressurized when the ME EQUIPMENT is isolated from its power supply (e.g. pulling out the pneumatic plug at the connector mounted on the facility wall). If this is not possible, means shall be provided for the isolation (e.g. cutting off from the peripheral circuit), or local depressurizing of reservoirs and similar vessels, and pressure indication;

– all elements that can remain under pressure after isolation of the ME EQUIPMENT or an ACCESSORY from its power supply and that could result in an unacceptable RISK shall be provided with clearly identified exhaust devices, and a warning label drawing attention to the necessity of depressurizing these elements before any setting or maintenance activity on the ME EQUIPMENT or ACCESSORIES.

Compliance is checked by inspection and examination of RISK MANAGEMENT FILE.

9.7.3 ~~Maximum pressure~~ Void

~~The maximum pressure to which a part of ME EQUIPMENT can be subjected in NORMAL CONDITION and SINGLE FAULT CONDITION shall be considered to be whichever is the highest of the following:~~

~~a) the RATED maximum supply pressure from an external source;~~

~~b) the pressure setting of a pressure-relief device provided as part of the assembly;~~

~~c) the maximum pressure that can be developed by a source of pressure that is part of the assembly, unless the pressure is limited by a pressure-relief device.~~

Copyright International Electrotechnical Commission
Provided by IHS Markit under license with IEC
No reproduction or networking permitted without license from IHS Not for Resale, 08/26/2020 19:12:41 MDT

9.7.4 Pressure rating of ME EQUIPMENT parts

The ~~maximum pressure to which a part of ME EQUIPMENT can be subjected in NORMAL CONDITION and SINGLE FAULT CONDITION shall not exceed the~~ MAXIMUM PERMISSIBLE WORKING PRESSURE for the part, except as allowed for pressure relief devices in 9.7.7.

Compliance is checked by inspection of the MANUFACTURER'S data for the component, inspection of the ME EQUIPMENT~~, inspection of the RISK MANAGEMENT FILE~~, and where necessary, by functional test.

9.7.5 * Pressure vessels

A pressure vessel shall withstand a HYDRAULIC TEST PRESSURE if both the following conditions are met:

– the ~~pressure~~ MAXIMUM EQUIPMENT PRESSURE is greater than 50 kPa; and

– the product of ~~pressure~~ MAXIMUM EQUIPMENT PRESSURE and volume is greater than 200 kPa · l.

Compliance is checked by the following tests:

The HYDRAULIC TEST PRESSURE is the MAXIMUM ~~PERMISSIBLE WORKING~~ EQUIPMENT PRESSURE multiplied by a factor obtained from Figure 32.

The pressure is raised gradually to the specified test value and is held at that value for 1 min. A sample that bursts or suffers from permanent (plastic) deformation or leaks constitutes a failure. Leakage at a gasket during this test is not considered to constitute failure unless it occurs at a pressure below 40 % of the required test value, or below the MAXIMUM ~~PERMISSIBLE WORKING~~ EQUIPMENT PRESSURE, whichever is greater.

No leakage is allowed for pressure vessels intended for toxic, flammable or otherwise hazardous substances. For other pressure vessels, no leakage is allowed that will otherwise result in an unacceptable RISK (e.g. high pressure fluid jet).

Where unmarked pressure vessels and pipes (e.g. those with no national certification) cannot be hydraulically tested, integrity is verified by other suitable tests, e.g. pneumatic using suitable media, at the same test pressure as for the hydraulic test.

Copyright International Electrotechnical Commission
Provided by IHS Markit under license with IEC
No reproduction or networking permitted without license from IHS
Not for Resale, 08/26/2020 19:12:41 MDT

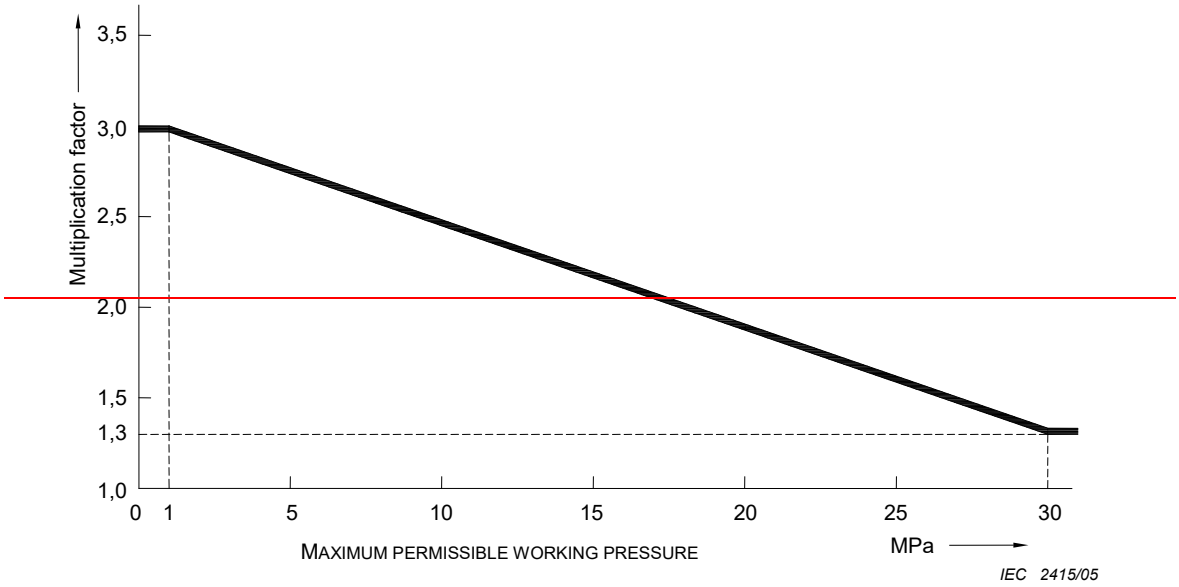

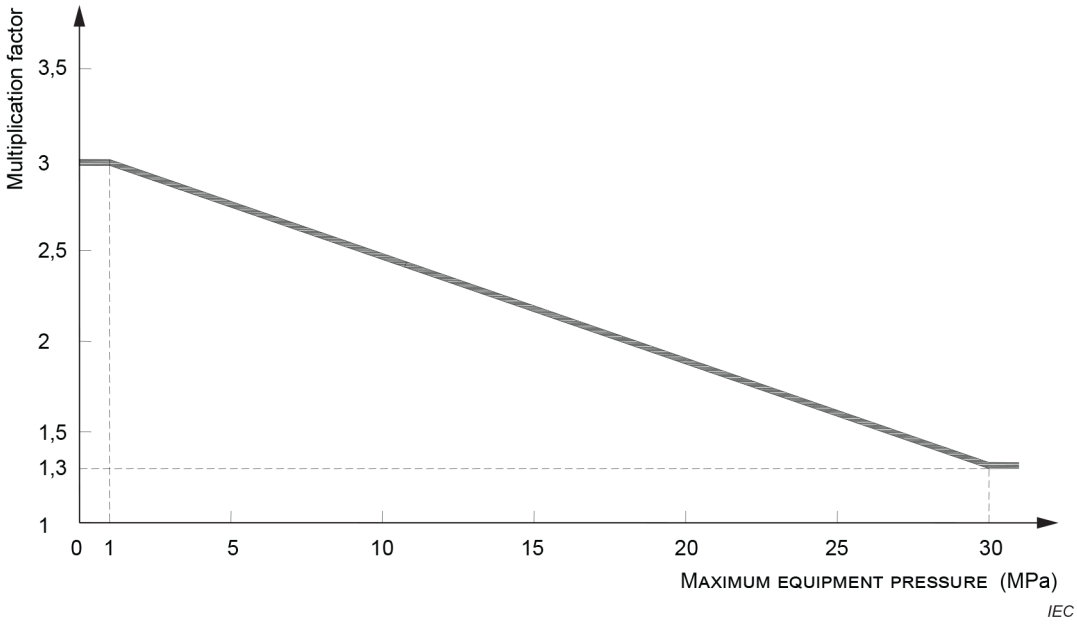

Figure 32 – Ratio between HYDRAULIC TEST PRESSURE and MAXIMUM ~~PERMISSIBLE WORKING~~ EQUIPMENT PRESSURE
(see 9.7.5)

9.7.6 Pressure-control device

In ME EQUIPMENT for which 9.7.7 requires a pressure-relief device, any pressure-control device responsible for regulating the pressure shall be capable of performing under RATED load for 100 000 cycles of operation and shall prevent the pressure from exceeding 90 % of the setting of the pressure-relief device under any condition of NORMAL USE.

Compliance is checked by inspection of the MANUFACTURER'S data for the component, inspection of the ME EQUIPMENT~~, inspection of the RISK MANAGEMENT FILE~~, and where necessary, by functional test.

NOTE When applicable, ISO 10524-1:2018 [80] can be a suitable component standard (see 4.8).

Copyright International Electrotechnical Commission
Provided by IHS Markit under license with IEC
No reproduction or networking permitted without license from IHS
Not for Resale, 08/26/2020 19:12:41 MDT

9.7.7 Pressure-relief device

ME EQUIPMENT shall incorporate pressure-relief device(s) where the MAXIMUM PERMISSIBLE WORKING PRESSURE could otherwise be exceeded.

A pressure-relief device shall comply with all of the following requirements:

a) it shall be connected as close as reasonably practical to the pressure vessel or parts of the system that it is intended to protect;

b) it shall be so installed that it is readily accessible for inspection, maintenance and repair;

c) it shall not be capable of being adjusted or rendered inoperative without the use of a TOOL;

d) it shall have its discharge opening so located and directed that the released material is not directed towards any person;

e) it shall have its discharge opening so located and directed that operation of the device will not deposit material on parts that could result in an unacceptable RISK;

f) it shall be of adequate discharge capacity to ensure that the pressure will not exceed the MAXIMUM ~~PERMISSIBLE WORKING~~ EQUIPMENT PRESSURE of the system to which it is connected by more than 10 % in the event of a failure in the control of the supply pressure;

g) there shall be no shut-off valve between a pressure-relief device and the parts that it is intended to protect;

h) the minimum number of cycles of operation shall be 100 000, except for one-time use devices such as bursting disks.

Compliance is checked by inspection of the MANUFACTURER'S data for the component, inspection of the ME EQUIPMENT, inspection of the RISK MANAGEMENT FILE, and where necessary, by functional test.

9.7.8 RATED maximum supply pressure

See 7.2.18.

9.8 * MECHANICAL HAZARDS associated with support systems

9.8.1 General

Where ME EQUIPMENT parts are designed to support loads or to provide actuating forces, the following requirements shall be applied if a mechanical fault could constitute an unacceptable RISK.

– The construction of the support, suspension or actuation system shall be designed based upon Table 21 and the TOTAL LOAD.

– Means of attachment of ACCESSORIES shall be designed such that any possibility of incorrect attachment that could result in an unacceptable RISK is avoided.

– The RISK ANALYSIS of support systems shall consider MECHANICAL HAZARDS arising from static, dynamic, vibration, impact and pressure loading, foundation and other movements, temperature, environmental, manufacture and service conditions.

– All likely failure effects shall be considered in the RISK ANALYSIS. These include excessive deflection, plastic deformation, ductile or brittle fracture, fatigue fracture, instability (buckling), stress-assisted corrosion cracking, wear, material creep, material deterioration and residual stresses resulting from the manufacturing PROCESSES, e.g. machining, assembling, welding, heat treatment or surface coating.

– The ACCOMPANYING DOCUMENTS shall contain instructions on attachment of structures to a floor, wall, ceiling, etc. making adequate allowances for quality of the materials used to

Copyright International Electrotechnical Commission
Provided by IHS Markit under license with IEC
No reproduction or networking permitted without license from IHS Not for Resale, 08/26/2020 19:12:41 MDT

make the connection and shall list the required materials. Additionally there shall be advice on checking the adequacy of the surface of the structure to which the parts will be attached.

9.8.2 * TENSILE SAFETY FACTOR

Support systems shall maintain structural integrity during the EXPECTED SERVICE LIFE of the ME EQUIPMENT. TENSILE SAFETY FACTORS shall not be less than those shown in Table 21 unless an alternative method demonstrates structural integrity throughout the EXPECTED SERVICE LIFE of the ME EQUIPMENT, or the support is a foot rest. The requirements for foot rests are in 9.8.3.2 a).

Table 21 – Determination of TENSILE SAFETY FACTOR

Situation			Minimum TENSILE SAFETY FACTOR [a]	
No.	System Part	Elongation	A [b]	B [c]
1	Support system parts not impaired by wear	Metallic material [d] having a specific elongation at break equal to or greater than 5 %	2,5	4
2	Support system parts not impaired by wear	Metallic material [d] having a specific elongation at break of less than 5 %	4	6
3	Support system parts impaired by wear [e] and no MECHANICAL PROTECTIVE DEVICE	Metallic material [d] having a specific elongation at break equal to or greater than 5 %	5	8
4	Support system parts impaired by wear [e] and no MECHANICAL PROTECTIVE DEVICE	Metallic material [d] having a specific elongation at break of less than 5 %	8	12
5	Support system parts impaired by wear [e] and with MECHANICAL PROTECTIVE DEVICE (or primary system of multiple support systems)	Metallic material [d] having a specific elongation at break equal to or greater than 5 %	2,5	4
6	Support system parts impaired by wear [e] and with MECHANICAL PROTECTIVE DEVICE (or primary system of multiple support systems)	Metallic material [d] having a specific elongation at break of less than 5 %	4	6
7	MECHANICAL PROTECTIVE DEVICE (or back-up system of multiple support system)	Metallic material [d] having a specific elongation at break equal to or greater than 5 % is assumed (see rationale in Annex A, subclause 9.8.4).	2,5	4

[a] The TENSILE SAFETY FACTORS are intended to take account of conditions defined in 15.3.7 (i.e. environmental effects, impairing effects of wear, corrosion, material fatigue or ageing).

[b] Case A = The material TENSILE STRENGTH and all external forces to be expected are quantifiable and known accurately.

[c] Case B = Other than case A; specifically, the material TENSILE STRENGTH and all external forces to be expected are known approximately, but not with sufficient accuracy to justify the TENSILE SAFETY FACTOR for case A.

[d] For non-metallic materials, particular standards can prescribe adequate TENSILE SAFETY FACTORS (see rationale in Annex A, Subclause 9.8).

[e] Components considered impaired by wear include: chains, cables (wire rope), belts, jack screw nuts, springs, pneumatic or hydraulic hoses, gaskets or rings of pneumatic or hydraulic pistons.

Compliance with 9.8.1 and 9.8.2 is checked by inspection of the ME EQUIPMENT, the RISK MANAGEMENT FILE, the specifications of materials used and the processing specifications for these materials.

--`,,`,,`-`-`,,`,,`,`,,`---
Copyright International Electrotechnical Commission
Provided by IHS Markit under license with IEC
No reproduction or networking permitted without license from IHS
Not for Resale, 08/26/2020 19:12:41 MDT

~~*When test results are part of relevant information, testing consists of gradually applying a test load to the support assembly under test equal to the TOTAL LOAD times the required TENSILE SAFETY FACTOR.*~~ *If testing is needed to demonstrate compliance with 9.8.1 or 9.8.2, a test load equal to the TOTAL LOAD times the required TENSILE SAFETY FACTOR is gradually applied to the support assembly under test. The support assembly under test is to be in equilibrium after 1 min, or otherwise not result in an unacceptable RISK.*

NOTE 1 It might be necessary to support assemblies that are connected to the assembly under test but do not require such a high safety factor, e.g. assembly under test requires TENSILE SAFETY FACTOR = 8 and assembly supporting it is designed with a TENSILE SAFETY FACTOR = 4. Use of additional support should be explained in the test report.

NOTE 2 The 1 min time period might need to be longer for materials which might have creep type problems, such as plastics or other non-metallic materials.

9.8.3 * Strength of PATIENT or OPERATOR support or suspension systems

9.8.3.1 General

ME EQUIPMENT parts serving for support or immobilization of PATIENTS shall be designed and manufactured so ~~as to minimize the~~ there is no unacceptable RISK of physical injuries ~~and~~ or of accidental loosening of fixings.

The SAFE WORKING LOAD of ME EQUIPMENT or its parts serving for support or suspension of PATIENTS or OPERATORS shall be the sum of the mass of the PATIENTS or the mass of the OPERATORS plus the mass of ACCESSORIES intended by MANUFACTURERS to be supported or suspended by the ME EQUIPMENT or ME EQUIPMENT parts.

Unless otherwise stated by the MANUFACTURER, supporting and suspending parts for adult human PATIENTS or OPERATORS shall be designed for a PATIENT or OPERATOR having a minimum mass of 135 kg and ACCESSORIES having a minimum mass of 15 kg.

Where a MANUFACTURER specifies particular applications (e.g. paediatric use), the maximum mass of the PATIENT included in the SAFE WORKING LOAD of the ME EQUIPMENT or its parts serving for support or suspension of PATIENTS may be adapted. When the maximum allowable value of the mass of the PATIENT is less than 135 kg, that value shall be marked on the ME EQUIPMENT and described in ACCOMPANYING DOCUMENTS. When the maximum allowable value of the mass of the PATIENT is more than 135 kg, that value shall be described in ACCOMPANYING DOCUMENTS.

~~*Compliance is checked by inspection of markings, ACCOMPANYING DOCUMENTS, and the RISK MANAGEMENT FILE.*~~

Compliance is checked by inspection of the ME EQUIPMENT (including markings), the ACCOMPANYING DOCUMENTS, the MANUFACTURER'S data for the component, the RISK MANAGEMENT FILE, and, where necessary, functional test.

9.8.3.2 * Static forces due to loading from persons

In analyzing loading forces and torques on support assemblies, the part of the SAFE WORKING LOAD representing the mass of the PATIENTS or OPERATORS is distributed on the support/suspension surface in a manner representing the human body (see the example in Figure A.19).

NOTE 1 The position of the human body varies depending on the configuration of the support/suspension system and therefore the load acting on different sections will vary and should be taken into account.

In analyzing loading forces and torques on support assemblies, the part of the SAFE WORKING LOAD representing the mass of ACCESSORIES shall be deployed as in NORMAL USE or, if not defined, at the worst case position permitted by the configuration or ACCESSORIES attachment on the support/suspension parts.

a) For a foot rest that is intended to temporarily support a standing PATIENT or OPERATOR, the whole mass of the PATIENT or OPERATOR is distributed over an area of 0,1 m^2.

--`,,`````,,`,`,`,,,,,,,,,`````-`-`,,`,,`,`,,`---

Copyright International Electrotechnical Commission
Provided by IHS Markit under license with IEC
No reproduction or networking permitted without license from IHS Not for Resale, 08/26/2020 19:12:41 MDT

Compliance is checked by inspection of the ME EQUIPMENT~~, the RISK MANAGEMENT FILE~~, the specifications of materials used and the processing specifications for these materials, and the following test:

Prior to performing these tests, the PATIENT support/suspension system is positioned horizontally in its most disadvantageous position in NORMAL USE.

A mass equal to two times 135 kg or two times the intended person load, whichever is greater is applied to the foot rest over an area of 0,1 m^2 for 1 min. After the test, a foot rest and its fixings that shows any damage or permanent deflection~~ that could result in an unacceptable RISK~~ from normal greater than 5° constitutes a failure. BASIC SAFETY and ESSENTIAL PERFORMANCE shall be maintained.

NOTE 2 Examples of damage that can affect BASIC SAFETY include the reduction of CREEPAGE DISTANCES and AIR CLEARANCES below those specified in 8.9, access to parts that exceed limits in 8.4, or access to moving parts that could cause HARM.

Assessment criteria that can be useful in determining if this test has resulted in a loss of BASIC SAFETY include:

– those in Clause 8 and 11.6;
– the dielectric strength test as specified in 8.8.3 to evaluate the integrity of solid insulation providing a MEANS OF PROTECTION; and
– measurement of CREEPAGE DISTANCES or AIR CLEARANCES to compare the values with the minimum distances specified in 8.9. Small chips that do not adversely affect the protection against electric shock or moisture can normally be ignored.

b) For an area of support/suspension where a PATIENT or OPERATOR can sit, deflection of a support surface from PATIENT or OPERATOR loading shall not result in an unacceptable RISK.

Compliance is checked by inspection of the ME EQUIPMENT~~, the RISK MANAGEMENT FILE~~, the specifications of materials used and the processing specifications for these materials, and the following test:

Prior to performing these tests, the PATIENT support/suspension system is positioned horizontally in its most disadvantageous position in NORMAL USE.

A mass of 60 % of the part of the SAFE WORKING LOAD representing the PATIENT or OPERATOR, as defined in the instructions for use, or~~ at~~ a minimum 80 kg, is placed on the support/suspension system with the centre of the load 60 mm from the outer edge of the support/suspension system for~~ a time of~~ at least one minute. Any permanent deflection of the support/suspension system~~ that could result in an unacceptable RISK~~ from normal greater than 5° constitutes a failure. BASIC SAFETY and ESSENTIAL PERFORMANCE shall be maintained.

NOTE 3 Examples of damage that can affect BASIC SAFETY include the reduction of CREEPAGE DISTANCES and AIR CLEARANCES below those specified in 8.9, access to parts that exceed limits in 8.4, or access to moving parts that could cause HARM.

Assessment criteria that can be useful in determining if this test has resulted in a loss of BASIC SAFETY include:

– those in Clause 8 and 11.6;
– the dielectric strength test as specified in 8.8.3 to evaluate the integrity of solid insulation providing a MEANS OF PROTECTION; and
– measurement of CREEPAGE DISTANCES or AIR CLEARANCES to compare the values with the minimum distances specified in 8.9. Small chips that do not adversely affect the protection against electric shock or moisture can normally be ignored.

9.8.3.3 * Dynamic forces due to loading from persons

Where dynamic forces (due to sitting down, standing up, PATIENT handling PROCESS or the like) can be exerted on ME equipment parts intended to support or suspend a PATIENT or OPERATOR in NORMAL USE,~~ they shall not result in an unacceptable RISK~~ the ME EQUIPMENT shall maintain BASIC SAFETY and ESSENTIAL PERFORMANCE.

Compliance is checked by the following test:

Copyright International Electrotechnical Commission
Provided by IHS Markit under license with IEC
No reproduction or networking permitted without license from IHS
Not for Resale, 08/26/2020 19:12:41 MDT

Prior to performing this test, the PATIENT support/suspension system is positioned horizontally in its most disadvantageous position in NORMAL USE.

~~*For the area of support/suspension where a PATIENT or OPERATOR can sit, a mass (as defined in Figure 33) equivalent to the SAFE WORKING LOAD representing the PATIENT or OPERATOR as defined in the instructions for use is dropped from a distance of 150 mm above the seat area. Any loss of function or structural damage that could result in an unacceptable RISK constitutes a failure.*~~

For the area of support/suspension where a PATIENT or OPERATOR can sit, the top reservoir of the body upper-carriage module described in Figure 33 is loaded with the appropriate mass to obtain the SAFE WORKING LOAD representing the PATIENT or OPERATOR as defined in the ACCOMPANYING DOCUMENTS. The body upper-carriage module with appropriate mass is dropped from a distance of 150 mm from the lowest edge of the foam to the area where a PATIENT or OPERATOR can sit. BASIC SAFETY and ESSENTIAL PERFORMANCE shall be maintained.

NOTE Examples of damage that can affect BASIC SAFETY include the reduction of CREEPAGE DISTANCES and AIR CLEARANCES below those specified in 8.9, access to parts that exceed limits in 8.4, or access to moving parts which could cause HARM.

Assessment criteria that can be useful in determining if this test has resulted in a loss of BASIC SAFETY include:

– those in Clause 8 and 11.6;

– the dielectric strength test as specified in 8.8.3 to evaluate the integrity of solid providing a MEANS OF PROTECTION; and

– measurement of CREEPAGE DISTANCES or AIR CLEARANCES to compare the values with the minimum distances specified in 8.9. Small chips that do not adversely affect the protection against electric shock or moisture can normally be ignored.

9.8.4 * Systems with MECHANICAL PROTECTIVE DEVICES

9.8.4.1 General

a) A MECHANICAL PROTECTIVE DEVICE shall be provided when a support system or any of its parts impaired by wear have a TENSILE SAFETY FACTOR greater than or equal to the values specified in rows 5 and 6 but less than those in rows 3 and 4 of Table 21.

b) The MECHANICAL PROTECTIVE DEVICE shall:

– be designed on the basis of TOTAL LOAD, which shall include the effects of the SAFE WORKING LOAD when applicable;

– have TENSILE SAFETY FACTORS for all parts not less than those in row 7 of Table 21;

– activate before travel (movement) produces an unacceptable RISK;

– take into account 9.2.5 and 9.8.4.3.

~~*Compliance is checked by inspection of the ME EQUIPMENT, the RISK MANAGEMENT FILE, the specifications of materials used and the processing specifications for these materials.*~~

Compliance is checked by the following as necessary:

– *inspection of the overtravel (stopping distance from the time of engagement of the MECHANICAL PROTECTIVE DEVICE to the time of no further movement) calculations and evaluation;*

– *any functional tests.*

NOTE The overtravel (stopping distance from the time of engagement of the MECHANICAL PROTECTIVE DEVICE to the time of no further movement) calculations and evaluation are part of the RISK MANAGEMENT FILE.

Copyright International Electrotechnical Commission
Provided by IHS Markit under license with IEC
No reproduction or networking permitted without license from IHS
Not for Resale, 08/26/2020 19:12:41 MDT

Dimensions in millimetres

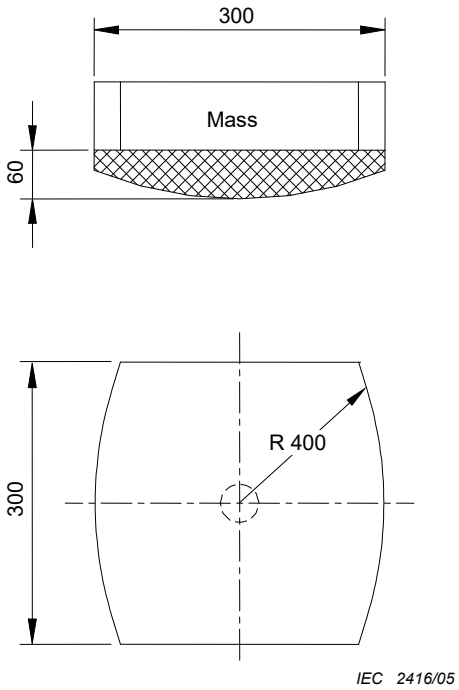

NOTE ~~The upper carriage of the human body test mass apparatus~~ The top reservoir of the body upper-carriage module is formed of wood, metal or a similar material. The reservoir is intended to retain the appropriate human body mass, typically with high density material (e.g. lead). The bottom portion is foam. The resiliency or spring factor of the foam (ILD or IFD ratings) is not specified, as with a large mass being dropped, the foam properties are likely inconsequential. The foam is cylindrical, rather than spherical.

Figure 33 – ~~Human body test mass (see 9.8.3.3)~~ Body upper-carriage module

9.8.4.2 Use after activation of a MECHANICAL PROTECTIVE DEVICE

If ME EQUIPMENT can still be used after failure of the suspension or actuation means and activation of a MECHANICAL PROTECTIVE DEVICE such as a secondary cable (wire rope), it shall become obvious to the OPERATOR that the MECHANICAL PROTECTIVE DEVICE has been activated.

The MECHANICAL PROTECTIVE DEVICE shall require the use of a TOOL to be reset or replaced.

Compliance is checked by inspection of the ME EQUIPMENT.

9.8.4.3 MECHANICAL PROTECTIVE DEVICE intended for single activation

If a MECHANICAL PROTECTIVE DEVICE is intended to function only once, the following requirements shall be fulfilled:

– Further use of the ME EQUIPMENT shall be impossible until the MECHANICAL PROTECTIVE DEVICE has been replaced.

– The ACCOMPANYING DOCUMENTS shall instruct that once the MECHANICAL PROTECTIVE DEVICE has been activated, SERVICE PERSONNEL are to be called, and the MECHANICAL PROTECTIVE DEVICE must be replaced before the ME EQUIPMENT can be used again.

– The ME EQUIPMENT shall be permanently marked with ~~safety sign~~ SAFETY SIGN ISO 7010-W001 (see Table D.2, ~~safety sign~~ SAFETY SIGN 2).

– The marking shall be adjacent to the MECHANICAL PROTECTIVE DEVICE or so located that its relation to the MECHANICAL PROTECTIVE DEVICE is obvious to the person performing service or repair.

NOTE See also 15.3.7.

--`,,`,,`-`-`,,`,,`,`,,`---

Copyright International Electrotechnical Commission
Provided by IHS Markit under license with IEC
No reproduction or networking permitted without license from IHS
Not for Resale, 08/26/2020 19:12:41 MDT

Compliance is checked as follows:

– *by inspection of the ME EQUIPMENT, the ACCOMPANYING DOCUMENTS~~, the RISK MANAGEMENT FILE,~~ and the specifications of materials used and the processing specifications for these materials;*

– *a chain, cable (wire rope), band, spring, belt, jack screw nut, pneumatic or hydraulic hose, structural part or the like, employed to support a load, is defeated (to test the MECHANICAL PROTECTIVE DEVICE) by any convenient means, thereby causing the maximum normal load to fall from the most adverse position permitted by the construction of the ME EQUIPMENT. If the system supports a PATIENT or OPERATOR, the load is to include the SAFE WORKING LOAD defined in 9.8.3.1.*

Any evidence of damage to a MECHANICAL PROTECTIVE DEVICE that would affect its ability to perform its intended function constitutes a failure.

9.8.5 Systems without MECHANICAL PROTECTIVE DEVICES

A MECHANICAL PROTECTIVE DEVICE is not required if:

– the support system parts are not impaired by wear and have TENSILE SAFETY FACTORS greater than or equal to the values specified in rows 1 and 2 of Table 21; or

– the support system parts are impaired by wear but have TENSILE SAFETY FACTORS greater than or equal to the values specified in rows 3 and 4 of Table 21.

Compliance is checked by inspection of the ME EQUIPMENT, the design documentation and the RISK MANAGEMENT FILE.

10 * Protection against unwanted and excessive radiation HAZARDS

10.1 X-Radiation

10.1.1 * ME EQUIPMENT not intended to produce diagnostic or therapeutic X-radiation

For ME EQUIPMENT not intended to produce X-radiation for diagnostic or therapeutic purposes, but which might produce ionizing radiation, the ~~dose rate~~ AIR KERMA rate shall not exceed ~~36 pA/kg (5 µSv/h) (0,5 mR/h)~~ 5 µGy/h at a distance of 5 cm from a surface of the ME EQUIPMENT taking account of the background radiation.

If the INTENDED USE of the ME EQUIPMENT requires a permanent proximity to a PATIENT, the resulting annual exposure should be made acceptable taking into account the irradiated body part and national regulations and/or international recommendations.

NOTE 1 The dose-rate value appears in ICRP 60 [39].

NOTE 2 In the member countries of CENELEC, the amount of ionizing radiation is regulated by European Council Directive 96/29/Euratom of 13 May 1996. This Directive requires that at any point 10 cm from the surface of the equipment, the dose-rate shall not exceed 1 µSv/h (0,1 mR/h) taking account of the background level.

Compliance is checked by following test:

The amount of radiation is determined by means of a radiation monitor of the ionizing chamber type with an effective area of 10 cm² or by measuring equipment of other types giving equivalent results.

The ME EQUIPMENT is operated at the most unfavourable RATED MAINS VOLTAGE and with any controls adjusted so as to give maximum radiation whilst maintaining the ME EQUIPMENT in NORMAL USE.

Internal preset controls not intended to be adjusted during the EXPECTED SERVICE LIFE of the ME EQUIPMENT are not considered.

Measurements are made at a distance of 5 cm from any surface to which OPERATORS other than SERVICE PERSONNEL:

– *can gain access without the use of a TOOL;*

--`,,`,,`-`-`,,`,,`,`,,`---
Copyright International Electrotechnical Commission
Provided by IHS Markit under license with IEC
No reproduction or networking permitted without license from IHS
Not for Resale, 08/26/2020 19:12:41 MDT

– *is deliberately provided with the means of access; or*

– *is instructed to enter regardless of whether or not a* TOOL *is needed to gain access.*

Any measurement exceeding ~~36 pA/kg (5 µSv/h) (0,5 mR/h)~~ 5 µGy/h adjusted for the level of background radiation constitutes a failure.

NOTE 3 This test PROCEDURE is equivalent to that in ~~Annex H of IEC 60950-1:2001~~ IEC 60950-1:2005, Annex H or to IEC 62368-1:2018, 10.5.3.

10.1.2 ME EQUIPMENT intended to produce diagnostic or therapeutic X-radiation

~~The MANUFACTURER shall address in the RISK MANAGEMENT PROCESS the RISK from unintended X-radiation from ME EQUIPMENT designed to produce X-radiation for diagnostic and therapeutic purposes. See IEC 60601-1-3 and also see 1.3.~~

~~*Compliance is checked by inspection of the RISK MANAGEMENT FILE.*~~

Unintended X-radiation from ME EQUIPMENT designed to produce diagnostic or therapeutic X-radiation shall be reduced as far as possible by application of applicable particular and collateral standards, or in the absence of these standards by application of the RISK MANAGEMENT PROCESS.

For intended X-radiation, also see 12.4.5.2 and 12.4.5.3.

Compliance is checked by application of applicable particular and collateral standards or inspection of the RISK MANAGEMENT FILE.

10.2 Alpha, beta, gamma, neutron and other particle radiation

When applicable, the MANUFACTURER shall address in the RISK MANAGEMENT PROCESS the RISKS associated with alpha, beta, gamma, neutron and other particle radiation.

Compliance is checked by inspection of the RISK MANAGEMENT FILE.

10.3 Microwave radiation

~~When applicable, the MANUFACTURER shall address in the RISK MANAGEMENT PROCESS the RISKS associated with microwave radiation.~~

~~*Compliance is checked by inspection of the RISK MANAGEMENT FILE.*~~

The power density of unintended microwave radiation at frequencies between 1 GHz and 100 GHz shall not exceed 10 W/m^2 at any point 50 mm away from a surface of the ME EQUIPMENT under reference test conditions. This requirement does not apply to parts of the apparatus where microwave radiation is propagated intentionally, for example, at waveguide output ports.

NOTE This requirement is equivalent to that in subclause 12.4 of IEC 61010-1:2001.

Compliance is checked by review of MANUFACTURER'S calculations and, if necessary, the following test:

The ME EQUIPMENT is operated at the most unfavourable RATED MAINS VOLTAGE and with any control adjusted so as to give maximum microwave radiation whilst maintaining the ME EQUIPMENT in NORMAL USE.

Internal pre-set controls not intended to be adjusted during the expected SERVICE LIFE of the ME EQUIPMENT are not considered.

Measurements are made at a distance of 50 mm from any surface to which OPERATORS other than SERVICE PERSONNEL:

– *can gain access without the use of a TOOL;*

– *are deliberately provided with the means of access; or*

--`,,`````,,`,`,,`,,,,,,,,,,```-`-`,,`,,`,`,,`---

Copyright International Electrotechnical Commission
Provided by IHS Markit under license with IEC
No reproduction or networking permitted without license from IHS Not for Resale, 08/26/2020 19:12:41 MDT

– *are instructed to enter regardless of whether or not a TOOL is needed to gain access.*

Any measurement exceeding 10 W/m² under reference test conditions constitutes a failure.

10.4 * Lasers ~~and light emitting diodes (LEDs)~~

~~The relevant requirements of IEC 60825-1:1993 apply. If laser light barriers or similar products are used within equipment, they shall comply with the requirements of IEC 60825-1:1993.~~

For lasers, including laser diodes, that produce or amplify electromagnetic radiation in the wavelength range from 180 nm to 1 mm, the relevant requirements of IEC 60825-1:2014 shall apply. If laser light barriers or similar products are used within equipment, they shall comply with the requirements of IEC 60825-1:2014.

NOTE For laser equipment that is intended for use on humans or animals for surgical, therapeutic, medical diagnostic, cosmetic, or veterinary applications and classified as a Class 3b or Class 4 laser product as defined in IEC 60825-1:2014, see also IEC 60601-2-22 [59].

Compliance is checked by following the relevant PROCEDURES of IEC 60825-1:~~1993~~2007.

10.5 * Other visible electromagnetic radiation

When applicable, the MANUFACTURER shall address in the RISK MANAGEMENT PROCESS the RISKS associated with visible electromagnetic radiation, other than that produced by lasers ~~and light emitting diodes~~ (see 10.4).

Compliance is checked by inspection of the RISK MANAGEMENT FILE.

10.6 * Infrared radiation

When applicable, the MANUFACTURER shall address in the RISK MANAGEMENT PROCESS the RISKS associated with infrared radiation, other than that produced by lasers ~~and light emitting diodes~~ (see 10.4).

Compliance is checked by inspection of the RISK MANAGEMENT FILE.

10.7 * Ultraviolet radiation

When applicable, the MANUFACTURER shall address in the RISK MANAGEMENT PROCESS the RISKS associated with ultraviolet radiation, other than that produced by lasers ~~and light emitting diodes~~ (see 10.4).

Compliance is checked by inspection of the RISK MANAGEMENT FILE.

11 Protection against excessive temperatures and other HAZARDS

11.1 * Excessive temperatures in ME EQUIPMENT

11.1.1 * Maximum temperature during NORMAL USE

When ME EQUIPMENT is operated in worst-case NORMAL USE including the maximum ambient operating temperature specified in the technical description (see 7.9.3.1):

– ME EQUIPMENT parts shall not reach temperatures exceeding the values given in Table 22 and Table 23;

NOTE Also see the information in 13.1.2 when applying SINGLE FAULT CONDITIONS.

– the ME EQUIPMENT shall not cause the surfaces of the test corner to exceed 90 °C; and

– THERMAL CUT-OUTS shall not operate in NORMAL CONDITION.

Copyright International Electrotechnical Commission
Provided by IHS Markit under license with IEC
No reproduction or networking permitted without license from IHS Not for Resale, 08/26/2020 19:12:41 MDT

Table 22 – Allowable maximum temperatures of parts

Parts	Maximum Temperature °C
Insulation, including winding insulation [a]	
- of Class A Material	105
- of Class E Material	120
- of Class B Material	130
- of Class F Material	155
- of Class H Material	180
Parts with T marking	T [b]
Other components and materials	[c]
Parts in contact with flammable liquid with flash-point of T °C	T-25
Wood	90

[a] The classification of insulating materials is in accordance with IEC 60085. Any incompatibility of the materials of an insulating system that could reduce the maximum temperature limit of the system below the limits of the individual materials shall be considered.

[b] T marking refers to the marked maximum operating temperature.

[c] For each material and component, account shall be taken of the temperature ratings for each material or component to determine the appropriate maximum temperature. Each component shall be used in accordance with its temperature rating. Where doubt exists, the ball pressure test of 8.8.4.1 should be performed.

Table 23 – Allowable maximum temperatures for ~~ME EQUIPMENT parts~~ ACCESSIBLE PARTS that are likely to be touched

~~ME EQUIPMENT and its parts~~ ACCESSIBLE PARTS		Maximum temperature [a] °C		
		Metal and liquids	Glass, porcelain, vitreous material	Moulded material, plastic, rubber, wood
External surfaces of ~~ME EQUIPMENT~~ ACCESSIBLE PARTS that are likely to be touched for a time "*t*"	*t* < 1 s	74	80	86
	1 s ≤ *t* < 10 s	56	66	71
	10 s ≤ *t* < 1 min	51	56	60
	1 min ≤ *t*	48	48	48

[a] These temperature limit values are applicable for touching the healthy skin of adults. They are not applicable when large areas of the skin (10 % of total body surface or more) can be in contact with a hot surface. This also applies in the case of skin contact with over 10 % of the head surface. Where this is the case, appropriate limits shall be determined and documented in the RISK MANAGEMENT FILE.

Copyright International Electrotechnical Commission
Provided by IHS Markit under license with IEC
No reproduction or networking permitted without license from IHS
Not for Resale, 08/26/2020 19:12:41 MDT

Table 24 – Allowable maximum temperatures for skin contact with ME EQUIPMENT APPLIED PARTS

APPLIED PARTS of ME EQUIPMENT		Maximum temperature [a] [b] °C		
		Metal and liquids	Glass, porcelain, vitreous material	Moulded material, plastic, rubber, wood
APPLIED PART having contact with the PATIENT for a time "*t*"	*t* < 1 min	51	56	60
	1 min ≤ *t* < 10 min	48	48	48
	10 min ≤ *t*	43	43	43

[a] These temperature limit values are applicable for the healthy skin of adults. They are not applicable when large areas of the skin (10 % of total body surface or more) can be in contact with a hot surface. They are not applicable in the case of skin contact with over 10 % of the head surface. Where this is the case, appropriate limits shall be determined and documented in the RISK MANAGEMENT FILE.

[b] Where it is necessary for APPLIED PARTS to exceed the temperature limits of Table 24 in order to provide clinical benefit, the RISK MANAGEMENT FILE shall contain documentation showing that the resulting benefit exceeds any associated increase in RISK.

11.1.2 * Temperature of APPLIED PARTS

11.1.2.1 APPLIED PARTS intended to supply heat to a PATIENT

The temperature (hot or cold surfaces) or (where appropriate) the clinical effects shall be determined and documented in the RISK MANAGEMENT FILE. The temperatures and clinical effects shall be disclosed in the instructions for use.

11.1.2.2 * APPLIED PARTS not intended to supply heat to a PATIENT

~~The limits of Table 24 shall apply. If the surface temperature of an APPLIED PART exceeds 41 °C, the maximum temperature shall be disclosed in the instructions for use and the clinical effects with respect to characteristics such as body surface, maturity of PATIENTS, medications being taken or surface pressure shall be determined and documented in the RISK MANAGEMENT FILE. Where 41°C is not exceeded, no justification is required.~~

~~Surfaces of APPLIED PARTS that are cooled below ambient temperatures can also result in HAZARD and shall be evaluated as part of the RISK MANAGEMENT PROCESS.~~

The limits of Table 24 shall apply in both NORMAL CONDITION and SINGLE FAULT CONDITION. If the surface temperature of an APPLIED PART exceeds 41 °C:

– the maximum temperature shall be disclosed in the instructions for use;

– the conditions for safe contact, e.g. duration or condition of the PATIENT, shall be disclosed; and

– the clinical effects with respect to characteristics such as body surface, maturity of PATIENTS, medications being taken or surface pressure shall be determined and documented in the RISK MANAGEMENT FILE.

Where 41°C is not exceeded, no justification is required.

If analyses documented in the RISK MANAGEMENT FILE demonstrate that APPLIED PART temperatures cannot be affected by operation of the ME EQUIPMENT including in SINGLE FAULT CONDITIONS, measurement of APPLIED PART temperature according to 11.1.3 is not required.

Surfaces of APPLIED PARTS that are cooled below ambient temperatures can also result in an unacceptable RISK and shall be evaluated as part of the RISK MANAGEMENT PROCESS.

Copyright International Electrotechnical Commission
Provided by IHS Markit under license with IEC
No reproduction or networking permitted without license from IHS
Not for Resale, 08/26/2020 19:12:41 MDT

11.1.3 * Measurements

Where engineering judgement by the MANUFACTURER indicates that temperature limits cannot be exceeded, no measurement is required. Where such judgements indicate that the test corner will not impact the measurements, it may be omitted. However, the rationale for such judgement shall be documented in the RISK MANAGEMENT FILE. If the test corner is used, its surfaces shall not exceed 90 °C.

For ~~ME EQUIPMENT parts~~ ACCESSIBLE PARTS that are likely to be touched and for APPLIED PARTS, the probability of occurrence of contact and of the duration of contact is determined and documented in the RISK MANAGEMENT FILE.

Compliance with the requirements of 11.1.1 and 11.1.2 is checked by inspection of the RISK MANAGEMENT FILE and the instructions for use, operation of ME EQUIPMENT and temperature measurements as follows:

a) Positioning

1) ME EQUIPMENT is tested in the position(s) of NORMAL USE.

2) ME EQUIPMENT is placed in a test corner. The test corner consists of two walls at right angles, a floor and, if necessary, a ceiling, all of dull black painted plywood of 20 mm thickness. The linear dimensions of the test corner are at least 115 % of the linear dimensions of the ME EQUIPMENT under test.

The ME EQUIPMENT is positioned in the test corner as follows:

- *ME EQUIPMENT normally used on a floor or a table is placed as near to the walls as is likely to occur in NORMAL USE.*
- *ME EQUIPMENT normally affixed to a wall is mounted on one of the walls, as near to the other wall and to the floor or ceiling as is likely to occur in NORMAL USE.*
- *ME EQUIPMENT normally affixed to a ceiling is mounted on the ceiling as near to the walls as is likely to occur in NORMAL USE.*

3) HAND-HELD ME EQUIPMENT is suspended in its normal position, in still air.

4) ME EQUIPMENT intended for installation in a cabinet or wall is built in as required by the technical description (see 7.9.3.1), using dull black painted plywood walls, 10 mm thick when representing cabinet walls if the technical description so specify and 20 mm thick when representing building walls.

b) Supply

- *ME EQUIPMENT having heating elements is operated as in NORMAL USE, with all heating elements energized unless prevented by switching interlocks, the supply voltage being equal to 110 % of the maximum RATED voltage.*
- *Motor operated ME EQUIPMENT is operated under normal load and normal DUTY CYCLE and the least favourable voltage between 90 % of the minimum RATED voltage and 110 % of the maximum RATED voltage.*
- *Combined heating and motor operated and other ME EQUIPMENT is tested both at 110 % of the maximum RATED voltage and at 90 % of the minimum RATED voltage.*
- *When modules are tested separately, the configuration for testing simulates the worst case conditions of NORMAL USE that might affect the test result.*

c) Thermal stabilization

- *For ME EQUIPMENT intended for non-CONTINUOUS OPERATION:*

  After operating in standby/quiescent mode until THERMAL STABILITY is reached, the ME EQUIPMENT is operated in NORMAL USE over consecutive cycles until THERMAL STABILITY is again achieved, or for 7 h, whichever is shorter. The "on" and "off" periods for each cycle are the RATED "on" and "off" periods;

Copyright International Electrotechnical Commission
Provided by IHS Markit under license with IEC
No reproduction or networking permitted without license from IHS Not for Resale, 08/26/2020 19:12:41 MDT

– *For ME EQUIPMENT for CONTINUOUS OPERATION:*

The ME EQUIPMENT is operated until THERMAL STABILITY is reached.

d) Temperature measurement

– *Resistance method (for windings):*

The value of the temperature rise of a copper winding is calculated from the formula:

$$\Delta T = \frac{R_2 - R_1}{R_1}(234{,}5 + T_1) - (T_2 - T_1)$$

where:

ΔT is the temperature rise in °C;

R_1 is the resistance at the beginning of the test in Ω;

R_2 is the resistance at the end of the test in Ω;

T_1 is the room temperature at the beginning of the test in °C;

T_2 is the room temperature at the end of the test in °C.

At the beginning of the test, windings are to be at room temperature.

NOTE When the resistance method is used, it is recommended that the resistance of windings at the end of the test be determined by taking measurements as soon as possible after switching off, and then at short intervals so that a curve of resistance against time can be plotted for ascertaining the value at the instant of switching off.

– *Thermocouple and other methods (for all measurements):*

Measurement is made by devices or sensors so chosen and positioned that they have a negligible effect on the temperature of the part under test.

When thermocouples are used to determine the temperature of windings, the temperature limits of Table 22 are to be reduced by 10 °C.

The temperature of electrical insulation, other than that of windings, is determined on the surface of the insulation at places where failure could cause a short circuit, bridging of a MEANS OF PROTECTION, bridging of insulation or reduction of CREEPAGE DISTANCES or AIR CLEARANCES below the values specified for the insulation type in 8.9.

The point of separation of cores of a multicore cord and where insulated wires enter lampholders are examples of places where temperatures might be measured.

e) Test criteria

During the test THERMAL CUT-OUTS are not de-activated.

The maximum temperature of a part is determined by measuring the temperature rise of the part under test and adding it to the maximum allowed ambient temperature specified in the technical description (see 7.9.3.1). Where thermal regulatory devices make this method inappropriate, alternative methods for measurement are justified in the RISK MANAGEMENT FILE.

11.1.4 GUARDS

GUARDS intended to prevent contact with hot or cold accessible surfaces of ME EQUIPMENT shall be removable only with the aid of a TOOL.

Compliance is checked by inspection.

--`,,```,,,,````-`-`,,`,,`,`,,`---

Copyright International Electrotechnical Commission
Provided by IHS Markit under license with IEC
No reproduction or networking permitted without license from IHS Not for Resale, 08/26/2020 19:12:41 MDT

11.2 * Fire prevention

11.2.1 * Strength and rigidity required to prevent fire in ME EQUIPMENT

ENCLOSURES shall have the strength and rigidity necessary to avoid a fire that could occur as a result of a total or partial collapse caused by reasonably foreseeable misuse.

Compliance is checked by the mechanical strength tests for ENCLOSURES (see 15.3).

11.2.2 * ME EQUIPMENT and ME SYSTEMS used in conjunction with OXYGEN RICH ENVIRONMENTS

11.2.2.1 RISK of fire in an OXYGEN RICH ENVIRONMENT

In ME EQUIPMENT and ME SYSTEMS, the RISK of fire in an OXYGEN RICH ENVIRONMENT shall be reduced as far as possible under NORMAL CONDITION or SINGLE FAULT CONDITIONS (as identified in 11.2.3). An unacceptable RISK of fire is considered to exist in an OXYGEN RICH ENVIRONMENT when a source of ignition is in contact with ignitable material and there is no means that would limit the spread of a fire.

NOTE 1 For oxygen concentrations up to 25 % at one atmosphere or partial pressures up to 27,5 kPa for higher atmospheric pressures, the requirements in 13.1.1 are considered to be sufficient.

a) * A source of ignition is considered to exist in an OXYGEN RICH ENVIRONMENT when any of the following conditions exist in NORMAL CONDITION and SINGLE FAULT CONDITIONS (including voltage and current):

   1) the temperature of the material is raised to its ignition temperature;

   2) temperatures could affect solder or solder joints causing loosening, short circuiting or other failures that could result in sparking or raising the temperature of the material to its ignition temperature;

   3) parts affecting safety crack or change their outer shape exposing temperatures exceeding 300 °C or sparks (see 4) and 5) below) due to overheating;

   4) temperatures of parts or components could exceed 300 °C;

   5) sparks provide adequate energy for ignition by exceeding the limits of Figure 35 to Figure 37 (inclusive).

   Items 4) and 5) address the worst case where the atmosphere is 100 % oxygen, the contact material (for item 5) is solder and the fuel is cotton. Available fuels and oxygen concentrations should be taken into consideration when applying these specific requirements. Where deviations from these worst case limits are made (based on lower oxygen concentrations or less flammable fuels) they shall be justified and documented in the RISK MANAGEMENT FILE.

   As an alternative to 11.2.2.1 a) 5), the following test may be used to determine whether a source of ignition exists.

   First, the place(s) within the ME EQUIPMENT where sparking might cause ignition are identified. Then the material(s) of the parts between which sparks can occur is identified. Samples of the same material are then used to construct the contact pins for the test apparatus (see Figure 34).

   Other parameters for the test are: oxygen concentration, fuel, electrical parameters (current, voltage, capacitance, inductance or resistance). These parameters are chosen such that they represent the worst case for the ME EQUIPMENT.

   NOTE 2 For ME EQUIPMENT that includes a circuit not addressed in Figure 35 to Figure 37 (inclusive), either the test voltage or current may be set at three times the worst case values with the other parameter set at the worst case value for determining whether ignition can occur.

Copyright International Electrotechnical Commission
Provided by IHS Markit under license with IEC
No reproduction or networking permitted without license from IHS Not for Resale, 08/26/2020 19:12:41 MDT

Two contact pins made of the material to be considered are placed in opposition (see Figure 34). One pin has a diameter of 1 mm, the other of 3 mm. The electrical source is connected to the pins as shown in Figure 35 to Figure 37. A piece of cotton is placed close to the contact surfaces of the two pins. The contacts are constantly flushed by oxygen with a speed of less than 0,5 m/s via a tube. The cathode is moved to the anode to close the contacts and pulled back to open them again. A minimum of 300 trials has to be performed before it can be decided that the sparks do not ignite. If the sparks get smaller because of bad surfaces of the electrodes, the electrodes are cleaned with a file. If the cotton gets black because it became oxidized then it is replaced. In Figure 36 and Figure 37, the resistance used to control current flowing into the inductor and the time constant for charging the capacitor is chosen such that it has minimal impact on the energy of the spark. This is tested by visual inspection without the capacitor in place or with the inductor shorted.

The situation with the highest voltage or current respectively and no ignition defines the upper limit. A safe upper limit is given by dividing the upper limit of voltage or current respectively with the safety margin factor of three.

NOTE 3 The safety margin factor is considered to cover the uncertainty of sparking experiments and the variability of the underlying parameters like pressure, quality of cotton or of the contact materials.

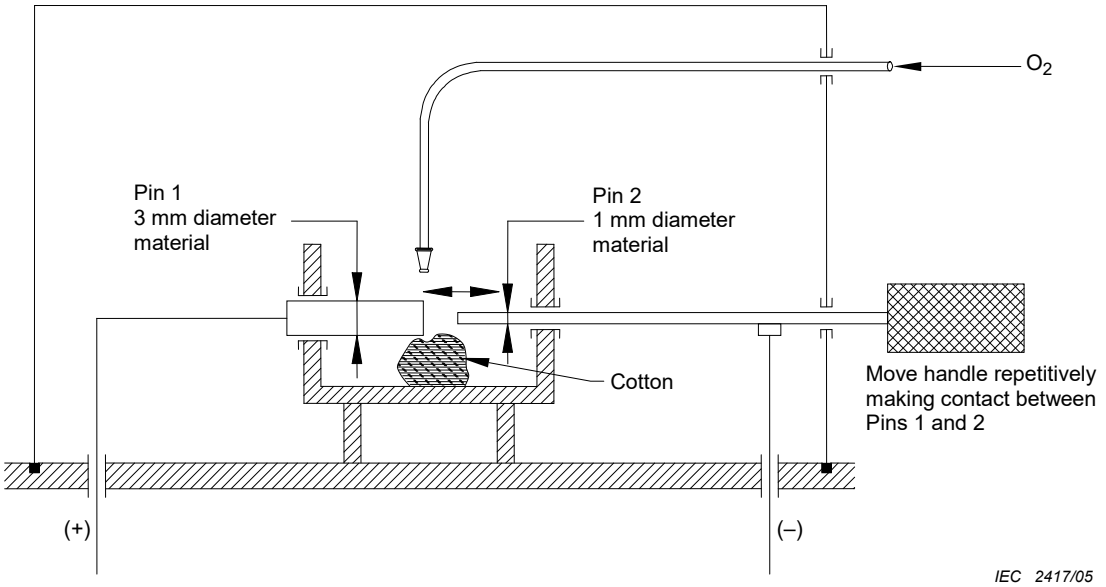

Figure 34 – Spark ignition test apparatus
(see 11.2.2.1)

Copyright International Electrotechnical Commission
Provided by IHS Markit under license with IEC
No reproduction or networking permitted without license from IHS
Not for Resale, 08/26/2020 19:12:41 MDT

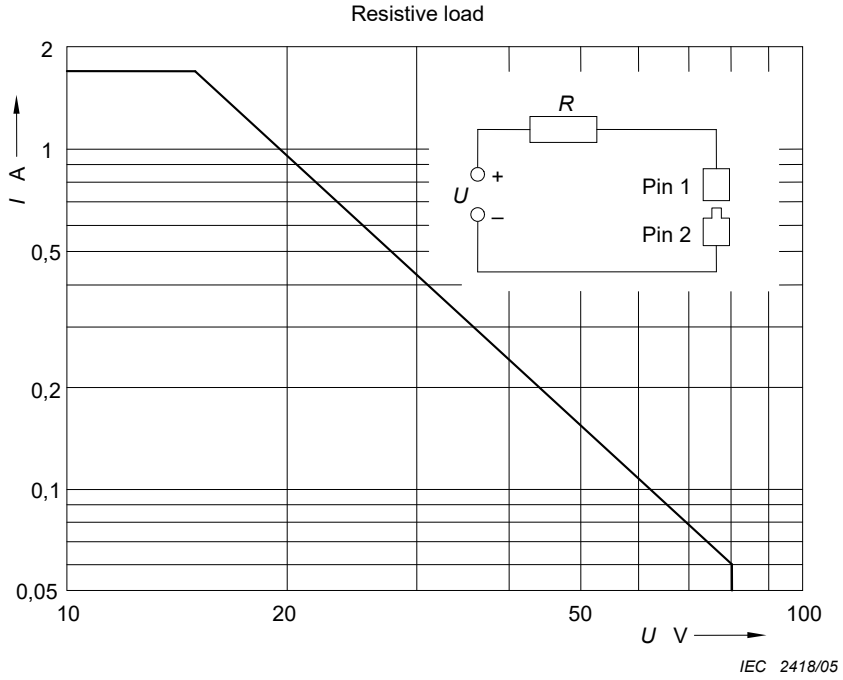

Figure 35 – Maximum allowable current *I* as a function of the maximum allowable voltage *U* measured in a purely resistive circuit in an OXYGEN RICH ENVIRONMENT
(see 11.2.2.1)

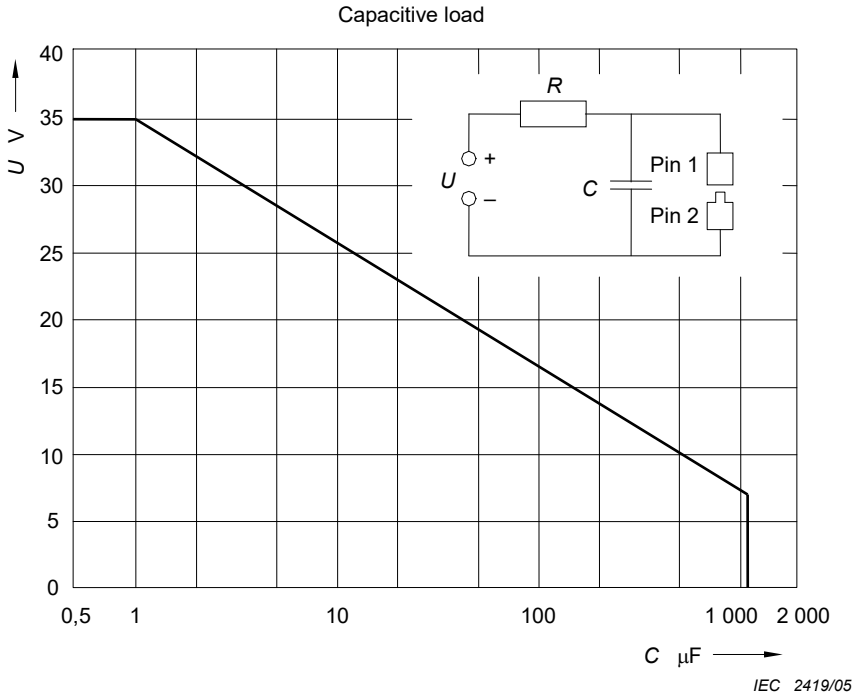

Figure 36 – Maximum allowable voltage *U* as a function of the capacitance *C* measured in a capacitive circuit used in an OXYGEN RICH ENVIRONMENT
(see 11.2.2.1)

Copyright International Electrotechnical Commission
Provided by IHS Markit under license with IEC
No reproduction or networking permitted without license from IHS
Not for Resale, 08/26/2020 19:12:41 MDT

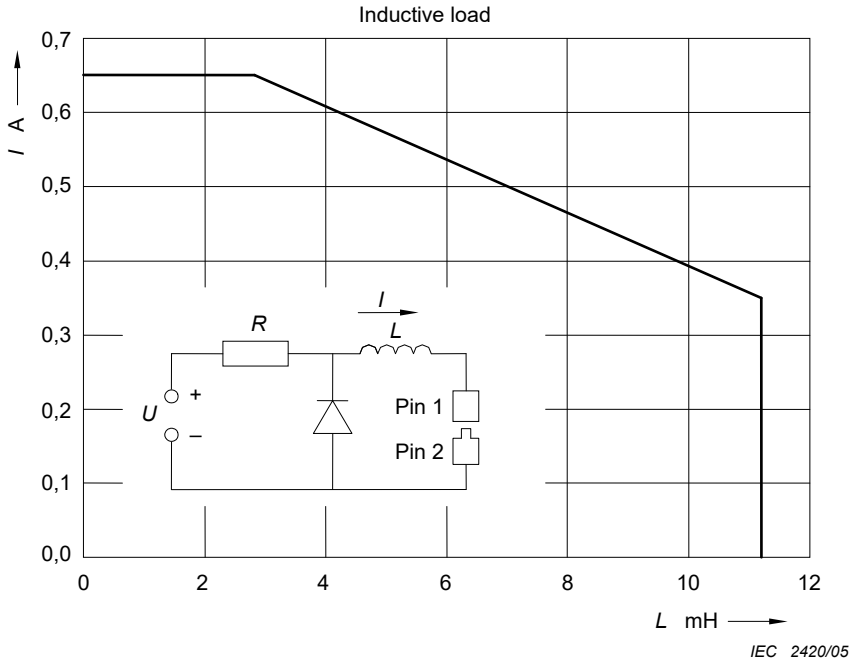

Figure 37 – Maximum allowable current *I* as a function of the inductance *L* measured in an inductive circuit in an OXYGEN RICH ENVIRONMENT
(see 11.2.2.1)

b) The following configurations, alone or in combination as appropriate (as determined by the application of the RISK MANAGEMENT PROCESS), are considered to provide an acceptable RESIDUAL RISK of fire in an OXYGEN RICH ENVIRONMENT.

1) Electrical components in a compartment with an OXYGEN RICH ENVIRONMENT shall have power supplies with limited energy levels. Those energy levels shall be less than those which are considered to be sufficient for ignition (see 11.2.2.1 a)).

Compliance is checked by inspection of the design and measurement or calculation of power, energy and temperature values in NORMAL CONDITION and SINGLE FAULT CONDITION (as identified in 11.2.3).

or

2) * Compartments that contain parts or components that can be a source of ignition (as defined in 11.2.2.1 a)) only under SINGLE FAULT CONDITION (as identified in 11.2.3) and that can be penetrated by oxygen (e.g. because of an undetected leak) shall be ventilated such that the oxygen concentration will not exceed 25 %.

Compliance is checked by the following test:

The oxygen concentration is measured for such a period that the highest possible concentration of oxygen occurs. The least favourable control settings are selected. The leaking conditions of oxygen are selected such that they provide the minimum leak that could be detected by the OPERATOR (e.g. because of a failure of the function of the device). If the concentration of oxygen exceeds 25 % in the presence of parts or components that could be a source of ignition including at the moment energy is applied, it constitutes a failure.

or

3) * A compartment that contains parts or components that can be a source of ignition (as defined in 11.2.2.1 a)) only under SINGLE FAULT CONDITION (as identified in 11.2.3) IS separated from another compartment that contains an OXYGEN RICH ENVIRONMENT by

Copyright International Electrotechnical Commission
Provided by IHS Markit under license with IEC
No reproduction or networking permitted without license from IHS
Not for Resale, 08/26/2020 19:12:41 MDT

sealing all joints and any holes for cables, shafts or for other purpose. The effect of possible leaks and failures under SINGLE FAULT CONDITION (as identified in 11.2.3) that could cause ignition shall be evaluated using a RISK ASSESSMENT to determine the appropriate maintenance intervals.

Compliance is checked by visual inspection and by inspection of the documentation provided by the MANUFACTURER including the RISK MANAGEMENT FILE.

or

4) Electrical components in a compartment containing an OXYGEN RICH ENVIRONMENT that can become a source of ignition (as defined in 11.2.2.1 a)) only under SINGLE FAULT CONDITIONS (as identified in 11.2.3) shall be enclosed in such a way that should ignition occur within the ENCLOSURE, the fire would self-extinguish rapidly and no hazardous amount of toxic gases would reach the PATIENT.

Compliance shall be checked by starting a fire in the ENCLOSURE. If it is not evident that toxic gases cannot reach the PATIENT, the gas that could reach the PATIENT is analyzed.

11.2.2.2 * External exhaust outlets for OXYGEN RICH ENVIRONMENT

External exhaust outlets of an OXYGEN RICH ENVIRONMENT shall not be located so that RISK of ignition occurs because of any electrical component (which could cause a spark in NORMAL USE or SINGLE FAULT CONDITION as identified in 11.2.3) mounted on the outside of the ME EQUIPMENT or an ME SYSTEM. RISK of ignition is considered to be sufficiently low if oxygen concentration in the immediate surroundings of the electrical component does not exceed 25 % under the least favourable conditions of operation.

Compliance is checked by inspection.

11.2.2.3 Electrical connections in OXYGEN RICH ENVIRONMENTS

Electrical connections within a compartment containing an OXYGEN RICH ENVIRONMENT under NORMAL USE shall not produce sparks because of loosening or breaking unless they are limited in power and energy to the values identified in 11.2.2.1 a) 5).

Prevention of loosening or breaking is accomplished by the following or equivalent methods.

– Screw-attachments shall be protected against loosening during use by methods such as varnishing, the use of spring washers or application of adequate torques.
– Soldered, crimped and pin-and-socket connections of cables that exit the ENCLOSURE shall include additional mechanical fixing.

Compliance is checked by visual inspection.

11.2.3 SINGLE FAULT CONDITIONS related to OXYGEN RICH ENVIRONMENTS in conjunction with ME EQUIPMENT and ME SYSTEMS

– Failure of a ventilation system constructed in accordance with 11.2.2.1 b) 2).
– Failure of a barrier constructed in accordance with 11.2.2.1 b) 3).
– Failure of a component that creates a source of ignition (as defined in 11.2.2.1 a)).
– Failure of insulation (whether solid material or spacing) providing the equivalent of at least one MEANS OF PATIENT PROTECTION but less than two MEANS OF PATIENT PROTECTION (as described in 8.8 and 8.9) that could create a source of ignition (as defined in 11.2.2.1 a)).
– Failure of a pneumatic component that results in leakage of oxygen-enriched gas.

11.3 * Constructional requirements for fire ENCLOSURES of ME EQUIPMENT

This subclause provides an alternative means of compliance with selected HAZARDOUS SITUATIONS and fault conditions as identified in 13.1.2. In doing so, the following constructional

Copyright International Electrotechnical Commission
Provided by IHS Markit under license with IEC
No reproduction or networking permitted without license from IHS Not for Resale, 08/26/2020 19:12:41 MDT

requirements shall be met or specifically analyzed in the RISK MANAGEMENT FILE and if not met, specific justification shall also be given.

a) ~~Insulated wire within the fire ENCLOSURE shall have a flammability classification equivalent FV-1, or better, according to the appropriate parts of the IEC 60695 series. Connectors, printed circuit boards and insulating material on which components are mounted shall have a flammability classification FV-2, or better, according to IEC 60695-11-10.~~

Insulated wire and connectors within the fire ENCLOSURE shall have a flammability classification of minimum V-2 when tested in accordance with IEC 60695-11-10, or be insulated with PVC, TFE, PTFE, FEP, polychloroprene or polyimide.

Printed circuit boards and insulating material on which components are mounted shall have a flammability classification of V-2, or better, according to IEC 60695-11-10.

Compliance is checked by inspection of data on materials, or by performing the ~~F~~V tests specified in IEC 60695-11-10 on three samples of the relevant parts being tested. The samples can be any of the following:

1) *complete parts; or*
2) *sections of a part, including the area with the least wall thickness and any ventilation openings.*

Components certified in accordance with IEC 60695-11-10 need not be tested.

b) The fire ENCLOSURE shall meet the following requirements:

1) ~~The bottom shall have no openings or, to the extent specified in Figure 39, shall be constructed with baffles as specified in Figure 38, or be made of metal, perforated as specified in Table 25, or be a metal screen with a mesh not exceeding 2 mm × 2 mm centre to centre and a wire diameter of at least 0,45 mm.~~

The bottom shall:

– have no openings; or
– to the extent specified in Figure 39, shall be constructed with baffles as specified in Figure 38; or
– be made of metal, perforated as specified in Table 25; or
– be a metal screen with a mesh not exceeding 2 mm × 2 mm centre to centre and a wire diameter of at least 0,45 mm.

2) ~~The sides shall have no openings within the area that is included within the inclined line C in Figure 39.~~

The sides within the area that is included within the inclined line C in Figure 39 shall:

– have no openings; or
– be made of metal, perforated as specified in Table 25; or
– be a metal screen with a mesh not exceeding 2 mm × 2 mm centre to centre and a wire diameter of at least 0,45 mm.

3) The ENCLOSURE, and any baffle or flame barrier, shall be made of metal (except magnesium) or of non-metallic materials, except for constructions according to Table 25 and constructions with a mesh, having a flammability classification of ~~F~~V-2 (or better) for TRANSPORTABLE ME EQUIPMENT and ~~F~~V-1 (or better) for FIXED ME EQUIPMENT or STATIONARY ME EQUIPMENT in accordance with IEC 60695-11-10.

The ENCLOSURE, and any baffle or flame barrier, shall have adequate rigidity.

NOTE Other design solutions for openings in the fire ENCLOSURE (e.g. baffle solutions) could be acceptable, like solutions provided in other standards. See first paragraph of 11.3 with respect to RISK MANAGEMENT.

--`,,`,,`-`-`,,`,,`,`,,`---

Copyright International Electrotechnical Commission
Provided by IHS Markit under license with IEC
No reproduction or networking permitted without license from IHS Not for Resale, 08/26/2020 19:12:41 MDT

Conformity is checked by inspection. In case of doubt, the flammability classification of requirement b) 3) is checked as in a).

Table 25 – Acceptable perforation of the bottom of an ENCLOSURE

Minimum thickness mm	**Maximum diameter of holes** mm	**Minimum spacing of holes centre to centre** mm
0,66	1,14	1,70 (233 holes/645 mm^2)
0,66	1,19	2,36
0,76	1.15	1,70
0,76	1,19	2,36
0,81	1,91	3,18 (72 holes/645 mm^2)
0,89	1,90	3,18
0,91	1,60	2,77
0,91	1,98	3,18
1,00	1,60	2,77
1,00	2,00	3,00

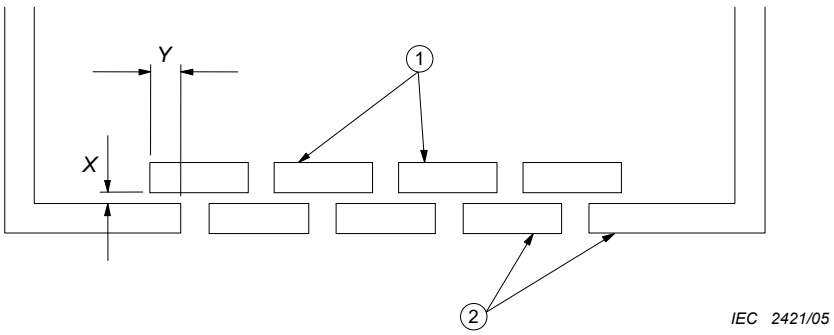

Y = twice X but never less than 25 mm

(1) Baffle plates (may be below the bottom of the ENCLOSURE)

(2) Bottom of the ENCLOSURE

Figure 38 – Baffle
(see 11.3)

Copyright International Electrotechnical Commission
Provided by IHS Markit under license with IEC
No reproduction or networking permitted without license from IHS
Not for Resale, 08/26/2020 19:12:41 MDT

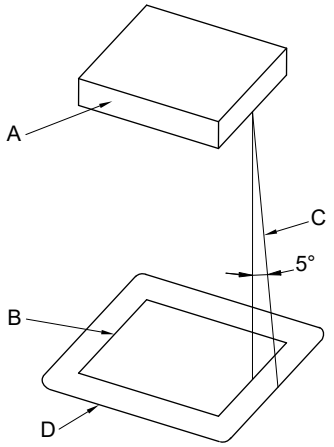

Key

A Part or component of the ME EQUIPMENT that is considered to be a source of fire. This consists of an entire component or part of the ME EQUIPMENT if it is not otherwise shielded, or the unshielded portion of a component that is partially shielded by its casing.

B Projection of the outline of A on the horizontal plane.

C Inclined line that traces out the minimum area of the bottom and sides to be constructed as specified in 11.3 b) 1*)* and 11.3 b) 2). This line projects at a 5° angle from the vertical at every point around the perimeter of A and is oriented so as to trace out the maximum area.

D Minimum area of the bottom to be constructed as specified in 11.3 b) 1).

Figure 39 – Area of the bottom of an ENCLOSURE as specified in 11.3 b) 1)
(see 11.3)

11.4 * ME EQUIPMENT and ME SYSTEMS intended for use with flammable anaesthetics

ME EQUIPMENT, ME SYSTEMS or their parts described in the ACCOMPANYING DOCUEMNTS for use with flammable anaesthetics (CATEGORY AP) or flammable anaesthetics with oxidants (CATEGORY APG) shall meet the applicable requirements of Annex G.

11.5 * ME EQUIPMENT and ME SYSTEMS intended for use in conjunction with flammable agents

The MANUFACTURER'S RISK MANAGEMENT PROCESS shall address the possibility of fire and associated mitigations.

Compliance is determined by inspection of the RISK MANAGEMENT FILE.

11.6 Overflow, spillage, leakage, ingress of water or particulate matter, cleaning, disinfection, sterilization and compatibility with substances used with the ME EQUIPMENT

11.6.1 General

The construction of ME EQUIPMENT and ME SYSTEMS shall ensure a sufficient degree of protection against overflow, spillage, leakage, ingress of water or particulate matter, cleaning, disinfection and sterilization as well as compatibility with substances used with the ME EQUIPMENT.

11.6.2 * Overflow in ME EQUIPMENT

If ME EQUIPMENT incorporates a reservoir or liquid storage chamber that is liable to be overfilled or to overflow in NORMAL USE, liquid overflowing from the reservoir or chamber shall not wet any MEANS OF PROTECTION that is liable to be adversely affected by such a liquid, nor

Copyright International Electrotechnical Commission
Provided by IHS Markit under license with IEC
No reproduction or networking permitted without license from IHS
Not for Resale, 08/26/2020 19:12:41 MDT

~~shall an unacceptable RISK be created~~ result in the loss of BASIC SAFETY or ESSENTIAL PERFORMANCE.

If the maximum fill level is indicated by marking on the ME EQUIPMENT and a warning or safety notice is given, no HAZARDOUS SITUATION (as specified in 13.1) or unacceptable RISK due to overflow shall develop if the reservoir or liquid storage chamber is filled to its maximum capacity and the TRANSPORTABLE ME EQUIPMENT is tilted through an angle of 10°, or for MOBILE ME EQUIPMENT exceeding 45 kg, if it is moved over a threshold as described in 9.4.2.4.3.

~~Unless restricted by a marking or by the instructions for use~~ If no warning or safety notice is given regarding the maximum fill level, no HAZARDOUS SITUATION (as specified ~~herein~~ in 13.1) or unacceptable RISK due to overflow shall develop if the reservoir or liquid storage chamber is filled to 15 % above the maximum capacity and the TRANSPORTABLE ME EQUIPMENT is tilted through an angle of ~~15°~~ 10°, or in MOBILE ME EQUIPMENT exceeding 45 kg, if it is moved over a threshold as described in 9.4.2.4.3.

~~*Compliance is checked by filling the liquid reservoir completely and subsequently adding a further quantity equal to 15 % of the capacity of the reservoir, which is poured in steadily over a period of 1 min.*~~

Compliance is checked by the following:

If warnings or safety notices regarding overfilling are marked on the TRANSPORTABLE ME EQUIPMENT, the liquid reservoir is filled to the indicated maximum level.

If there is no warning or safety notice regarding overfilling marked on the TRANSPORTABLE ME EQUIPMENT, the liquid reservoir is filled completely and subsequently a further quantity equal to 15 % of the capacity of the reservoir is added poured in steadily over a period of 1 min.

TRANSPORTABLE ME EQUIPMENT is subsequently tilted through an angle of ~~15°~~ 10° in the least favourable direction(s) (if necessary with refilling) starting from the position of NORMAL USE.

MOBILE ME EQUIPMENT exceeding 45 kg is moved over a threshold as described in 9.4.2.4.3.

After these PROCEDURES, the ME EQUIPMENT is to pass the appropriate dielectric strength and LEAKAGE CURRENT tests and is to show no signs of wetting of uninsulated electrical parts or electrical insulation of parts that could result in ~~a HAZARDOUS SITUATION~~ the loss of BASIC SAFETY or ESSENTIAL PERFORMANCE in NORMAL CONDITION or in combination with a SINGLE FAULT CONDITION (based on a visual inspection).

11.6.3 * Spillage on ME EQUIPMENT and ME SYSTEMS

ME EQUIPMENT and ME SYSTEMS requiring the handling of liquids in NORMAL USE, including ME EQUIPMENT or ME SYSTEMS used in an environment where the PROCESS has determined that spillage on the ME EQUIPMENT is likely to occur, shall be so constructed that spillage does not wet parts that ~~could result in a HAZARDOUS SITUATION~~ are likely to result in the loss of BASIC SAFETY or ESSENTIAL PERFORMANCE .

Compliance is checked by inspection of the RISK MANAGEMENT FILE and by the following test:

The ME EQUIPMENT is positioned according to 5.4 a). A quantity of liquid is poured steadily on a point on the top of the ME EQUIPMENT. The type of liquid, volume, duration of the spill, and location (point) are determined through ~~application of the RISK MANAGEMENT PROCESS~~ RISK ANALYSIS . ~~All test conditions are identified through inspection of the RISK MANAGEMENT FILE.~~ Test conditions that simulate the worst case for spillage shall be documented in the RISK MANAGEMENT FILE.

After these PROCEDURES, the ME EQUIPMENT is to pass the appropriate dielectric strength and LEAKAGE CURRENT tests and is to show no signs of wetting of uninsulated electrical parts or electrical insulation of parts that could result in ~~a HAZARDOUS SITUATION~~ the loss of BASIC SAFETY or ESSENTIAL PERFORMANCE in NORMAL CONDITION or in combination with a SINGLE FAULT CONDITION (based on a visual inspection).

Copyright International Electrotechnical Commission
Provided by IHS Markit under license with IEC
No reproduction or networking permitted without license from IHS
Not for Resale, 08/26/2020 19:12:41 MDT

11.6.4 * Leakage

See 13.2.6.

11.6.5 * Ingress of water or particulate matter into ME EQUIPMENT and ME SYSTEMS

ENCLOSURES of ME EQUIPMENT and ME SYSTEMS designed to give a specified degree of protection against harmful ingress of water or particulate matter shall provide this protection in accordance with the classification of IEC 60529. See also 7.2.9.

Compliance is checked by the tests of IEC 60529 with the ME EQUIPMENT placed in the least favourable position of NORMAL USE and by inspection.

After ~~these PROCEDURES~~ the tests of IEC 60529, the ME EQUIPMENT is to show no signs of bridging of insulation (or electrical components) that ~~could result in a HAZARDOUS SITUATION~~ is likely to result in the loss of BASIC SAFETY or ESSENTIAL PERFORMANCE in NORMAL CONDITION or in combination with a SINGLE FAULT CONDITION (based on a visual inspection) followed by the appropriate dielectric strength and LEAKAGE CURRENT tests.

11.6.6 Cleaning and disinfection of ME EQUIPMENT and ME SYSTEMS

ME EQUIPMENT, ME SYSTEMS and their parts, including APPLIED PARTS and ACCESSORIES, shall be capable of withstanding, without damage or deterioration of safety provisions, the cleaning or disinfection PROCESSES specified in the instructions for use. See also 7.9.2.12.

The MANUFACTURER shall evaluate the effects of multiple cleanings/disinfections as indicated in the instructions for use during the EXPECTED SERVICE LIFE of the ME EQUIPMENT, ME SYSTEM, their parts and ACCESSORIES and assure that ~~no unacceptable RISK will occur. The results of the evaluation shall be documented in the RISK MANAGEMENT FILE~~ these PROCESSES do not result in the loss of BASIC SAFETY or ESSENTIAL PERFORMANCE.

Where compliance with this standard could be ~~affected~~ effected by cleaning or disinfecting the ME EQUIPMENT, ME SYSTEM and their parts and ACCESSORIES, they are cleaned or disinfected once in accordance with the methods specified including any cooling or drying period. After these PROCEDURES, the ME EQUIPMENT, ME EQUIPMENT parts or ACCESSORIES are to show no signs of deterioration that could result in an unacceptable RISK (visual inspection) followed by the appropriate dielectric strength and LEAKAGE CURRENT tests. The RISK MANAGEMENT FILE is inspected to verify that the MANUFACTURER has evaluated the affects of multiple cleanings.

11.6.7 Sterilization of ME EQUIPMENT and ME SYSTEMS

ME EQUIPMENT, ME SYSTEMS and their parts or ACCESSORIES intended to be sterilized shall be assessed and documented according to ~~ISO 11134, ISO 11135 or ISO 11137~~ ISO 11135-1, ISO 11137-1 or ISO 17665-1 as appropriate. See also 7.9.2.12.

After these PROCEDURES, the ME EQUIPMENT, ME SYSTEM and their parts or ACCESSORIES are to show no signs of deterioration that could result in an unacceptable RISK (visual inspection) followed by the appropriate dielectric strength and LEAKAGE CURRENT tests and by inspection of the RISK MANAGEMENT FILE.

11.6.8 * Compatibility with substances used with the ME EQUIPMENT

When applicable, the MANUFACTURER shall address in the RISK MANAGEMENT PROCESS the RISKS associated with compatibility with substances used with the ME EQUIPMENT. Such RISKS may be addressed through the application of appropriate ISO or IEC standards (giving the presumption of acceptable RISK according to 4.2) such as ISO 15001 [70] for components that contain oxygen at pressures greater than 50 kPa or through the MANUFACTURER'S own testing and RISK CONTROL measures.

Compliance is checked by inspection of the RISK MANAGEMENT FILE.

--`,,```,,,,````-`-`,,`,,`,`,,`---

Copyright International Electrotechnical Commission
Provided by IHS Markit under license with IEC
No reproduction or networking permitted without license from IHS
Not for Resale, 08/26/2020 19:12:41 MDT

11.7 Biocompatibility of ME EQUIPMENT and ME SYSTEMS

ME EQUIPMENT, ME SYSTEM and their parts or ACCESSORIES intended to come into direct or indirect contact with biological tissues, cells or body fluids shall be assessed and documented according to the guidance and principles given in the ISO 10993 series of standards.

Compliance is checked by inspection of the information provided by the MANUFACTURER.

11.8 * Interruption of the power supply / SUPPLY MAINS to ME EQUIPMENT

ME EQUIPMENT shall be so designed that an interruption and restoration of the power supply shall not result in ~~a HAZARDOUS SITUATION other than interruption of its intended function~~ the loss of BASIC SAFETY or ESSENTIAL PERFORMANCE .

NOTE This can require testing at several durations and ME EQUIPMENT states.

Compliance is checked by interruption and restoration of relevant power supplies.

12 * Accuracy of controls and instruments and protection against hazardous outputs

12.1 Accuracy of controls and instruments

When applicable, the MANUFACTURER shall address in the RISK MANAGEMENT PROCESS the RISKS associated with accuracy of controls and instruments.

Compliance is checked by inspection of the RISK MANAGEMENT FILE.

12.2 USABILITY of ME EQUIPMENT

~~The MANUFACTURER shall address in a USABILITY ENGINEERING PROCESS the RISK of poor USABILITY, including those associated with identification, marking and documents (see 7.1.1 and 16.2). See IEC 60601-1-6 and also see 1.3.~~

~~*Compliance is checked by inspection of the results of the USABILITY ENGINEERING PROCESS.*~~

The MANUFACTURER shall address the RISK(S) of poor USABILITY, including those associated with identification, marking and documents, through a USABILITY ENGINEERING PROCESS complying with IEC 60601-1-6:2010, IEC 60601-1-6:2010/AMD1:2013 and IEC 60601-1-6:2010/AMD2:2020.

Compliance is checked as specified in IEC 60601-1-6.

12.3 ALARM SYSTEMS

~~When applicable, the MANUFACTURER shall address in the RISK MANAGEMENT PROCESS the need for alarm systems as a means of RISK CONTROL and address any RISKS associated with the operation or failure of the alarm system. See IEC 60601-1-8 and also see 1.3.~~

~~*Compliance is checked by inspection of the RISK MANAGEMENT FILE.*~~

If the MANUFACTURER has implemented an ALARM SYSTEM, this ALARM SYSTEM shall comply with IEC 60601-1-8:2006, IEC 60601-1-8:2006/AMD1:2012 and IEC 60601-1-8:2006/AMD2:2020.

Compliance is checked as specified in IEC 60601-1-8.

12.4 Protection against hazardous output

12.4.1 * Intentional exceeding of safety limits

When applicable, the MANUFACTURER shall address in the RISK MANAGEMENT PROCESS the RISKS associated with hazardous output arising from the intentional exceeding of safety limits.

Compliance is checked by inspection of the RISK MANAGEMENT FILE.

Copyright International Electrotechnical Commission
Provided by IHS Markit under license with IEC
No reproduction or networking permitted without license from IHS
Not for Resale, 08/26/2020 19:12:41 MDT

12.4.2 Indication ~~of parameters~~ relevant to safety

When applicable, the MANUFACTURER shall address in the RISK MANAGEMENT PROCESS the need ~~for the indication of parameters that are associated with~~ to indicate any hazardous output.

EXAMPLE 1 Prior to the delivery of energy or substances to a PATIENT the energy, rate or volume ~~should be~~ is indicated quantitively.

EXAMPLE 2 During activation of an X-ray output, a flashing yellow light is displayed.

Compliance is checked by inspection of the RISK MANAGEMENT FILE.

12.4.3 * Accidental selection of excessive output values

Where ME EQUIPMENT is a multi-purpose unit designed for providing both low-intensity and high-intensity outputs for different treatments, the MANUFACTURER shall address in the RISK MANAGEMENT PROCESS the RISKS associated with accidental selection of excessive output values.

Compliance is checked by inspection of the RISK MANAGEMENT FILE.

12.4.4 Incorrect output

When applicable, the MANUFACTURER shall address in the RISK MANAGEMENT PROCESS the RISKS associated with incorrect output.

EXAMPLE The RISKS associated with incorrect delivery of energy or substances to a PATIENT can be addressed by providing an alarm to alert the OPERATOR to any significant departure from the set level of delivery.

Compliance is checked by inspection of the RISK MANAGEMENT FILE.

12.4.5 Diagnostic or therapeutic radiation

12.4.5.1 Limits

For ME EQUIPMENT designed to produce radiation for diagnostic or therapeutic purposes, adequate provisions shall be made to protect PATIENTS, OPERATORS, other persons and sensitive devices in the vicinity, from unwanted or excessive radiation emitted by the ME EQUIPMENT.

NOTE Radiation from ME EQUIPMENT intended for application to PATIENTS for diagnostic or therapeutic purpose under medical supervision could exceed limits normally acceptable for the population as a whole.

As appropriate, particular standards shall specify requirements, limits and compliance tests to ensure radiation safety.

12.4.5.2 Diagnostic X-ray equipment

~~When applicable, the MANUFACTURER shall address in the RISK MANAGEMENT PROCESS the RISKS associated with diagnostic X-rays. See IEC 60601-1-3 and also see 1.3.~~

~~*Compliance is checked by inspection of the RISK MANAGEMENT FILE.*~~

ME EQUIPMENT and ME SYSTEMS designed to produce X-radiation for diagnostic imaging purposes shall comply with IEC 60601-1-3.

Compliance is checked as specified in IEC 60601-1-3.

12.4.5.3 Radiotherapy equipment

When applicable, the MANUFACTURER shall address in the RISK MANAGEMENT PROCESS the RISKS associated with radiotherapy.

Compliance is checked by inspection of the RISK MANAGEMENT FILE.

Copyright International Electrotechnical Commission
Provided by IHS Markit under license with IEC
No reproduction or networking permitted without license from IHS Not for Resale, 08/26/2020 19:12:41 MDT

12.4.5.4 Other ME EQUIPMENT producing diagnostic or therapeutic radiation

When applicable, the MANUFACTURER shall address in the RISK MANAGEMENT PROCESS the RISKS associated with ME EQUIPMENT producing diagnostic or therapeutic radiation other than for diagnostic X-rays and radiotherapy (see 12.4.5.2 and 12.4.5.3).

Compliance is checked by inspection of the RISK MANAGEMENT FILE.

12.4.6 Diagnostic or therapeutic acoustic pressure

When applicable, the MANUFACTURER shall address in the RISK MANAGEMENT PROCESS the RISKS associated with diagnostic or therapeutic acoustic pressure.

Compliance is checked by inspection of the RISK MANAGEMENT FILE.

13 * HAZARDOUS SITUATIONS and fault conditions for ME EQUIPMENT

13.1 Specific HAZARDOUS SITUATIONS

13.1.1 * General

When applying the SINGLE FAULT CONDITIONS as described in 4.7 and listed in 13.2, one at a time, none of the HAZARDOUS SITUATIONS in 13.1.2 to 13.1.4 (inclusive) shall occur in the ME EQUIPMENT.

The failure of any one component at a time, which could result in a HAZARDOUS SITUATION, is described in 4.7.

13.1.2 * Emissions, deformation of ENCLOSURE or exceeding maximum temperature

The following HAZARDOUS SITUATIONS shall not occur:

– emission of flames, molten metal, poisonous or ignitable substance in hazardous quantities;

– deformation of ENCLOSURES to such an extent that compliance with 15.3.1 is impaired;

– temperatures of APPLIED PARTS exceeding the allowed values identified in Table 24 when measured as described in 11.1.3;

– ~~temperatures of ME EQUIPMENT parts that are not APPLIED PARTS but are likely to be touched, exceeding the allowable values in Table 23 when measured and adjusted as described in 11.1.3;~~

– * temperatures of ACCESSIBLE PARTS that are likely to be touched, but not intended to be touched to operate the ME EQUIPMENT, exceeding the limits in Table 34 when measured and adjusted as described in 11.1.3;

– * temperatures of ACCESSIBLE PARTS, intended to be touched to operate the ME EQUIPMENT, exceeding the limits in Table 23;

– exceeding the allowable values for “other components and materials” identified in Table 22 times 1,5 minus 12,5 °C. Limits for windings are found in Table 26, Table 27 and Table 31. In all other cases, the allowable values of Table 22 apply.

Temperatures shall be measured using the method described in 11.1.3.

--`,,```,,,,````-`-`,,`,,`,`,,`---

Copyright International Electrotechnical Commission
Provided by IHS Markit under license with IEC
No reproduction or networking permitted without license from IHS Not for Resale, 08/26/2020 19:12:41 MDT

Table 34 – Allowable maximum temperatures for ACCESSIBLE PARTS that are likely to be touched, but not intended to be touched to operate the ME EQUIPMENT

ME EQUIPMENT and its parts	Maximum temperature °C			
	Metal and liquids	Glass, porcelain, vitreous material	Moulded material, plastic, rubber	Wood
External surfaces of ACCESSIBLE PARTS that are likely to be touched for a time t < 1 s	80	90	104	150

The SINGLE FAULT CONDITIONS in 4.7, 8.1 b), 8.7.2 and 13.2.2, with regard to the emission of flames, molten metal or ignitable substances, shall not be applied to parts and components where:

– The construction ~~or~~ of the supply circuit limits the power dissipation in SINGLE FAULT CONDITION to less than 15 W or the energy dissipation to less than 900 J.

Compliance is checked by drawing 15 W from the supply circuit for 1 min. If, after 1 min. the supply circuit can not supply 15 W, the circuit shall be considered to limit power dissipation to less than 15 W. The related design documentation is also reviewed.

NOTE 1 When the investigated part of the supply circuit is a battery, the limit for the power dissipation is considered directly on the output contacts of the battery supply circuit, even before an external protective device.

or

– Secondary circuits meet all of the following conditions:

- mounted on material with a flammability classification of V-1 in accordance with IEC 60695-11-10 or better;
- they are energized at a voltage of 60 V d.c. or 42,4 V peak or less in NORMAL and SINGLE FAULT CONDITION;
- they are limited to less than 100 VA or are limited to less than 6 000 J in SINGLE FAULT CONDITION;
- they employ wire insulation of types PVC, TFE, PTFE, FEP, polychloroprene or polybromide.

NOTE 2 When the investigated part of the supply circuit is a battery, the limit for the power dissipation is considered directly on the output contacts of the battery supply circuit, even before an external protective device.

Compliance is checked by the following:

– *by drawing 100 VA from the supply circuit for 5 s after application of the load if protection is by an electronic circuit;*

– *by drawing 100 VA from the supply circuit for 60 s for a positive temperature coefficient device, or in other cases.*

If, after the specified time above, the supply circuit cannot supply 100 VA, the circuit shall be considered to limit power dissipation to less than 100 VA. The related design documentation is also reviewed.

or

– The component is a COMPONENT WITH HIGH-INTEGRITY CHARACTERISTICS as described in 4.9.

Compliance is checked by evaluation of the design documentation.

or

– They are completely contained within a fire ENCLOSURE.

Compliance is checked by inspection and evaluation of the design documentation to assure that the ENCLOSURE is constructed in accordance with 11.3.

Copyright International Electrotechnical Commission
Provided by IHS Markit under license with IEC
No reproduction or networking permitted without license from IHS
Not for Resale, 08/26/2020 19:12:41 MDT

NOTE 3 The tests according to this subclause should be performed in the sequence indicated in Annex B.

After the tests of this clause, THERMAL CUT-OUTS and OVER-CURRENT RELEASES are inspected to determine that their setting has not changed (by heating, vibration or other causes) sufficiently to affect their safety function.

13.1.3 Exceeding LEAKAGE CURRENT or voltage limits

The following HAZARDOUS SITUATIONS shall not occur:

– exceeding the limits for LEAKAGE CURRENT in SINGLE FAULT CONDITION as indicated in 8.7.3;

– exceeding the voltage limits for the ACCESSIBLE PARTS ~~including~~ and APPLIED PARTS indicated in 8.4.2.

13.1.4 Specific MECHANICAL HAZARDS

For specific MECHANICAL HAZARDS, see 9.1 to 9.8 (inclusive).

13.2 SINGLE FAULT CONDITIONS

13.2.1 General

During the application of the SINGLE FAULT CONDITIONS listed in 13.2.2 to 13.2.13 (inclusive), the NORMAL CONDITIONS identified in 8.1 a) shall also be applied in the least favourable combination.

If resistance to heat for insulation of thermoplastic materials that is used as SUPPLEMENTARY INSULATION or REINFORCED INSULATION is established by performing the ball-pressure test in 8.8.4.1, the test is performed at a temperature 25 °C higher than the temperature of the insulation measured during the tests of 13.2.2 to 13.2.13 (inclusive).

13.2.2 Electrical SINGLE FAULT CONDITION

Requirements and tests relating to this SINGLE FAULT CONDITION are found in 8.1.

13.2.3 Overheating of transformers in ME EQUIPMENT

Requirements and tests relating to this SINGLE FAULT CONDITION are found in 15.5.

13.2.4 Failure of THERMOSTATS

Requirements and tests relating to this SINGLE FAULT CONDITION are found in 13.2.13 and 15.4.2 for overloading situations.

THERMOSTATS are short circuited or interrupted, whichever is less favourable.

13.2.5 Failure of temperature limiting devices

Requirements and tests relating to this SINGLE FAULT CONDITION are found in 13.2.13 and 15.4.2 for overloading situations.

THERMOSTATS are short circuited or interrupted, whichever is less favourable.

13.2.6 Leakage of liquid

ME EQUIPMENT shall be so constructed that liquid that might escape in a SINGLE FAULT CONDITION does not result in an unacceptable RISK.

Since only small amounts of liquid will escape when they leak, sealed rechargeable batteries are exempted from this requirement.

A RISK MANAGEMENT PROCESS shall be used to determine the appropriate test conditions for the ME EQUIPMENT.

Compliance is checked by inspection of the RISK MANAGEMENT FILE.

Copyright International Electrotechnical Commission
Provided by IHS Markit under license with IEC
No reproduction or networking permitted without license from IHS Not for Resale, 08/26/2020 19:12:41 MDT

13.2.7 Impairment of cooling that could result in a ~~HAZARD~~ HAZARDOUS SITUATION

ME EQUIPMENT shall be so designed that it remains SINGLE FAULT SAFE during the failure of cooling systems to operate as intended.

Impairments of cooling that can occur are simulated, for example:

– *single ventilation fans are locked consecutively;*

– *ventilation through openings in top and sides is impaired by covering of openings in the top of the ENCLOSURE or positioning of ME EQUIPMENT against walls;*

– *blocking of filters is simulated;*

– *the flow of a cooling agent is interrupted.*

Temperatures that exceed the limits set in 13.1.2 constitute a failure.

Compliance is checked utilizing the test methods of 11.1, which are applied as far as possible.

13.2.8 Locking of moving parts

ME EQUIPMENT shall be so designed that it remains SINGLE FAULT SAFE when moving parts become jammed.

Moving parts are locked if ME EQUIPMENT:

– *has moving ACCESSIBLE PARTS ~~including~~ or APPLIED PARTS liable to be jammed, or*

– *is liable to be operated while unattended (this includes ME EQUIPMENT that is automatically or remotely controlled), or*

– *has one or more motors with a locked rotor torque smaller than the full load torque.*

If ME EQUIPMENT has more than one moving part as described above, only one part at a time is locked. If a SINGLE FAULT CONDITION can lock multiple motors, then all motors are locked simultaneously. For further test criteria see 13.2.10.

13.2.9 * Interruption and short circuiting of motor capacitors

ME EQUIPMENT shall be so designed that it remains SINGLE FAULT SAFE during the short circuit and open circuit of motor capacitors.

Compliance is checked by performing the following test:

Motors with a capacitor in the circuit of an auxiliary winding are operated according to 13.2.10 with a locked rotor, with the capacitor short circuited or open circuited in turn. Capacitor voltages are measured with one side disconnected (open circuit). A measured voltage that exceeds the RATED value constitutes a failure.

The test with a short-circuited capacitor is not performed if the motor is provided with a capacitor complying with IEC 60252-1 and the ME EQUIPMENT is not intended for unattended use (including automatic or remote control).

For additional test criteria, see 13.2.10.

13.2.10 * Additional test criteria for motor operated ME EQUIPMENT

For every test in the SINGLE FAULT CONDITION of 13.2.8 and 13.2.9, taking into account the exemptions stated in 13.1.2, motor-operated ME EQUIPMENT is operated starting from COLD CONDITION, at RATED voltage or at the upper limit of the RATED voltage range for the following periods of time:

a) *30 s for:*

– *HAND-HELD ME EQUIPMENT;*

Copyright International Electrotechnical Commission
Provided by IHS Markit under license with IEC
No reproduction or networking permitted without license from IHS Not for Resale, 08/26/2020 19:12:41 MDT

– *ME EQUIPMENT that has to be kept switched on by hand;*

– *ME EQUIPMENT that has to be kept under physical load by hand;*

b) *5 min for other ME EQUIPMENT intended only for attended use (attended use excludes automated or remotely controlled ME EQUIPMENT that could operate when the OPERATOR is not present);*

c) *for the maximum period of a timer, if such a device terminates the operation, for ME EQUIPMENT not listed under a) or b);*

d) *as long as necessary to establish THERMAL STABILITY for all the remaining ME EQUIPMENT.*

Temperatures of windings are determined at the end of the specified test periods or at the instant of operation of fuses, THERMAL CUT-OUTS, motor protective devices and the like.

Temperatures are measured as specified in 11.1.3 d).

Temperatures that exceed the limits of Table 26 constitute a failure.

13.2.11 Failures of components in ME EQUIPMENT used in conjunction with OXYGEN RICH ENVIRONMENTS

Requirements and tests relating to these SINGLE FAULT CONDITIONS are found in 11.2.2.

13.2.12 Failure of parts that might result in a MECHANICAL HAZARD

Requirements and tests relating to these SINGLE FAULT CONDITIONS are found in Clause 9 and 15.3.

Table 26 – * Temperature limits of motor windings

Temperature in °C

Type of ME EQUIPMENT	Insulation class				
	Class A	Class B	Class E	Class F	Class H
ME EQUIPMENT provided with a timer and not intended for unattended use and ME EQUIPMENT to be operated for 30 s or 5 min	200	225	215	240	260
Other ME EQUIPMENT					
– if impedance-protected, maximum value	150	175	165	190	210
– if protected by protection devices that operate during the first hour, maximum value	200	225	215	240	260
– after the first hour, maximum value	175	200	190	215	235
– after the first hour, arithmetic average	150	175	165	190	210
NOTE The temperature limits in this table were derived from IEC 61010-1:2001 [22].					

13.2.13 * Overload

13.2.13.1 * General overload test conditions

After the tests of 13.2.13.2 to 13.2.13.4 (inclusive), the ME EQUIPMENT, when cooled down to ~~approximately room temperature~~ within 3 °C of the temperature in the test environment, shall remain safe.

Compliance is determined by inspection of the ME EQUIPMENT or the appropriate tests (such as dielectric strength of motor insulation according to 8.8.3).

~~*For insulation of thermoplastic materials that is relied upon as a MEANS OF PROTECTION (see 8.8), the ball-pressure test specified in 8.8.4.1 a) is performed at a temperature 25 °C higher*~~

Copyright International Electrotechnical Commission
Provided by IHS Markit under license with IEC
No reproduction or networking permitted without license from IHS
Not for Resale, 08/26/2020 19:12:41 MDT

~~*than the temperature of the insulation measured during the tests of 13.2.13.2 to 13.2.13.4 (inclusive).*~~

13.2.13.2 ME EQUIPMENT with heating elements

a) ME EQUIPMENT having heating elements is checked for compliance as follows:

1) for thermostatically controlled ME EQUIPMENT having heating elements that is intended for built-in or for unattended operation or that has a capacitor not protected by a fuse or the like connected in parallel with the contacts of the THERMOSTAT: by the tests of 13.2.13.2 b) and 13.2.13.2 c);

2) for ME EQUIPMENT having heating elements RATED for non-CONTINUOUS OPERATION: by the tests of 13.2.13.2 b) and 13.2.13.2 c);

3) for other ME EQUIPMENT having heating elements: by the test of 13.2.13.2 b).

If more than one of the tests is applicable to the same ME EQUIPMENT, these tests are performed consecutively.

If, in any of the tests, a non-SELF-RESETTING THERMAL CUT-OUT operates, a heating element or an intentionally weak part ruptures, or if the current is otherwise interrupted before THERMAL STABILITY is established without the possibility of automatic restoration, the heating period is ended. However, if the interruption is due to the rupture of a heating element or of an intentionally weak part, the test is repeated on a second sample. Open circuiting of a heating element or of an intentionally weak part in the second sample does not in itself entail a failure to comply. However, if either sample fails to comply with the conditions specified in 13.1.2, it constitutes a failure.

b) ME EQUIPMENT having heating elements is tested under the conditions specified in 11.1, but without adequate heat discharge, the supply voltage being 90 % or 110 % of the RATED supply voltage, whichever is the least favourable.

If a non-SELF-RESETTING THERMAL CUT-OUT operates, or if the current is otherwise interrupted without the possibility of automatic restoration before THERMAL STABILITY is established, the operating period is ended. If interruption of the current does not occur, ME EQUIPMENT is switched off as soon as THERMAL STABILITY is established and is allowed to cool to approximately room temperature.

For ME EQUIPMENT RATED for non-CONTINUOUS OPERATION, the duration of the test is equal to the RATED operating time.

c) Heating parts of ME EQUIPMENT are tested with the ME EQUIPMENT operated in NORMAL CONDITION, at a supply voltage 110 % of the RATED supply voltage and as specified in 11.1. The following test conditions are met.

1) Any control that serves to limit the temperature in NORMAL CONDITION, except a THERMAL CUT-OUT, is disabled.

2) If the ME EQUIPMENT is provided with more than one control, they are disabled in turn.

3) The ME EQUIPMENT is operated at the RATED DUTY CYCLE until THERMAL STABILITY is achieved, irrespective of the RATED operating time.

13.2.13.3 ME EQUIPMENT with motors

a) ME EQUIPMENT having motors is checked for compliance as follows:

1) For the motor part of the ME EQUIPMENT, compliance is checked by the tests of 13.2.8 to 13.2.10 (inclusive), 13.2.13.3 b), 13.2.13.3 c) and 13.2.13.4, as applicable. For motors located in circuits with a voltage not exceeding 42,4 V peak a.c. or 60 V d.c. and where difficulty is experienced in obtaining accurate temperature measurements due to the small size or design of the motor, it is permitted to use the following test instead of temperature measurement in order to determine compliance with 13.2.9 and 13.2.10.

Copyright International Electrotechnical Commission
Provided by IHS Markit under license with IEC
No reproduction or networking permitted without license from IHS
Not for Resale, 08/26/2020 19:12:41 MDT

The motor is covered with a single layer of cheesecloth with the following characteristics:

- *bleached cotton material;*
- *26–28 m^2 per kg mass; and*
- *13 threads per cm in one direction and 11 threads per cm in the other.*

Ignition of the cheesecloth during the test or at its conclusion constitutes a failure.

2) *For ME EQUIPMENT that also contains heating parts, the tests are performed at the prescribed voltage, with the motor part and the heating part operated simultaneously so as to produce the least favourable condition.*

3) *If more than one of the tests is applicable for the same ME EQUIPMENT, these tests are performed consecutively.*

b) *Motors are checked for running overload protection if they are:*

1) *intended to be remotely controlled or automatically controlled (by a single control device without redundant protection), or*

2) *likely to be subjected to CONTINUOUS OPERATION whilst unattended.*

Compliance is determined by operating the ME EQUIPMENT under normal load conditions at RATED voltage or at the maximum of the RATED voltage range, until THERMAL STABILITY is achieved (see 11.1.3).

The load is then increased so that the current is increased in appropriate steps, the supply voltage being maintained at its original value.

When THERMAL STABILITY is established, the load is again increased. The load is thus progressively increased in appropriate steps until the overload protection operates, or until no further temperature rise is noted.

The motor winding temperature is determined during each steady period. If the maximum value recorded exceeds the value in Table 27, it constitutes a failure.

Table 27 – Maximum motor winding steady-state temperature

Insulation class	Maximum temperature °C
A	140
B	165
E	155
F	180
H	200

If the load cannot be changed in appropriate steps in ME EQUIPMENT, the motor is removed from the ME EQUIPMENT in order to perform the test.

The running overload test for motors located in circuits with a voltage not exceeding 42,4 V peak a.c. or 60 V d.c. is performed only if a possibility of an overload occurring is determined by inspection or by review of the design. The test need not be performed, for example, where electronic drive circuits maintain a substantially constant drive current.

c) *ME EQUIPMENT with three-phase motors is operated with normal load, connected to a three-phase (SUPPLY MAINS) with one phase disconnected. Periods of operation are according to 13.2.10.*

--`,,```,,,,````-`-`,,`,,`,`,,`---
Copyright International Electrotechnical Commission
Provided by IHS Markit under license with IEC
No reproduction or networking permitted without license from IHS Not for Resale, 08/26/2020 19:12:41 MDT

13.2.13.4 * ME EQUIPMENT RATED for non-CONTINUOUS OPERATION

ME EQUIPMENT RATED for non-CONTINUOUS OPERATION other than:

– *HAND-HELD ME EQUIPMENT*;

– *ME EQUIPMENT that has to be kept switched on manually;*

– *ME EQUIPMENT that has to be kept under physical load by hand;*

– *ME EQUIPMENT with a timer and a back-up timer system*

is operated under normal load and at RATED voltage or at the upper limit of the RATED voltage range until the peak temperature does not increase by more than 5 °C in one hour, or until any protective device operates.

Motor winding temperatures are determined when THERMAL STABILITY is established or immediately before the operation of the protective device. Motor winding temperatures that exceed the values specified in 13.2.10 constitute a failure.

If in NORMAL USE a load-reducing device in the ME EQUIPMENT operates, the test is continued with the ME EQUIPMENT running idle.

14 * PROGRAMMABLE ELECTRICAL MEDICAL SYSTEMS (PEMS)

14.1 * General

~~The requirements of this clause shall apply to PEMS unless:~~

~~– the PESS provides no BASIC SAFETY or ESSENTIAL PERFORMANCE; or~~

~~– the application of ISO 14971 demonstrates that the failure of the PESS does not lead to an unacceptable RISK.~~

The requirements in 14.2 to 14.12 (inclusive) shall apply to PEMS unless:

– none of the PROGRAMMABLE ELECTRONIC SUBSYSTEM (PESS) provides functionality necessary for BASIC SAFETY or ESSENTIAL PERFORMANCE; or

– the application of RISK MANAGEMENT as described in 4.2 demonstrates that the failure of any PESS does not lead to an unacceptable RISK.

The requirements in 14.13 are applicable to any PEMS intended to be incorporated into an IT-NETWORK whether or not the requirements in 14.2 to 14.12 apply.

NOTE 1 This clause requires that a PROCESS be followed throughout the PEMS DEVELOPMENT LIFE-CYCLE and that a RECORD of that PROCESS be produced. The concepts of RISK MANAGEMENT and a PEMS DEVELOPMENT LIFE-CYCLE are the basis of such a PROCESS. However, because a RISK MANAGEMENT PROCESS is already required by this standard, this clause will define the minimum elements of the PEMS DEVELOPMENT LIFE-CYCLE and only the additional elements for the PEMS that needs to be considered as part of the RISK MANAGEMENT PROCESS (see 4.2).

NOTE 2 If a RISK CONTROL measure is implemented within the PESS, it is necessary to apply Clause 14 to demonstrate that the failure of the PESS does not lead to an unacceptable RISK.

NOTE ~~2~~ 3 It is recognized that the MANUFACTURER might not be able to follow all the PROCESSES identified in Clause 14 for each constituent component of the PEMS, such as ~~off-the-shelf (OTS)~~ software of unknown provenance (SOUP), subsystems of non-medical origin, and legacy devices. In this case, the MANUFACTURER should take special account of the need for additional RISK CONTROL measures. SOUP is defined in IEC 62304:2006/AMD1:2015 as a “software item that is already developed and generally available and that has not been developed for the purpose of being incorporated into the medical device (also known as 'off-the-shelf software') or software item previously developed for which adequate RECORDS of the development PROCESSES are not available”.

~~*Compliance is determined by application of the requirements in 14.2 to 14.13 (inclusive), by inspection of the RISK MANAGEMENT FILE, and assessment of PROCESSES cited in this clause.*~~

Compliance is determined by inspection of all documentation required, and when necessary, assessment of the requirements in 14.2 to 14.13 (inclusive).

NOTE ~~3~~ 4 This assessment could be performed by internal audit.

Copyright International Electrotechnical Commission
Provided by IHS Markit under license with IEC
No reproduction or networking permitted without license from IHS
Not for Resale, 08/26/2020 19:12:41 MDT

When the requirements in 14.2 to 14.13 apply, the requirements in subclause 4.3, Clause 5, Clause 7, Clause 8 and Clause 9 of IEC 62304:2006 and IEC 62304:2006/AMD1:2015 shall also apply to the development or modification of software for each PESS.

Compliance is determined by inspection and assessment as required by subclause 1.4 of IEC 62304:2006 and IEC 62304:2006/AMD1:2015.

NOTE 5 The software development PROCESS required for compliance with this standard does not include the post-production monitoring and maintenance required by Clause 6 of IEC 62304:2006:2006 and IEC 62304:2006/AMD1:2015.

14.2 * Documentation

~~In addition to the RECORDS and documents required by ISO 14971, the documents produced from application of Clause 14 shall be maintained and shall form part of the RISK MANAGEMENT FILE.~~

~~NOTE See Figure H.3 as guidance.~~

The documents required by Clause 14 shall be reviewed, approved, issued and changed in accordance with a formal document control PROCEDURE.

14.3 * RISK MANAGEMENT plan

The RISK MANAGEMENT plan required by ~~3.5 of ISO 14971~~ 4.2.2 shall also include a reference to the PEMS VALIDATION plan (see 14.11).

14.4 * PEMS DEVELOPMENT LIFE-CYCLE

A PEMS DEVELOPMENT LIFE-CYCLE shall be documented.

NOTE ~~1~~ Clause H.2 explains PEMS DEVELOPMENT LIFE-CYCLE in more detail.

~~NOTE 2 IEC 62304 [26] defines general requirements for additional PROCESSES and activities specific to software development.~~

The PEMS DEVELOPMENT LIFE-CYCLE shall include a set of defined milestones.

At each milestone, the activities to be completed and the VERIFICATION methods to be applied to those activities shall be defined.

Each activity shall be defined including its inputs and outputs.

Each milestone shall identify the RISK MANAGEMENT activities that must be completed before that milestone.

The PEMS DEVELOPMENT LIFE-CYCLE shall be tailored for a specific development by making plans which detail activities~~,~~ and milestones ~~and schedules~~.

The PEMS DEVELOPMENT LIFE-CYCLE shall include documentation requirements.

14.5 * Problem resolution

Where appropriate, a documented system for problem resolution within and between all phases and activities of the PEMS DEVELOPMENT LIFE-CYCLE shall be developed and maintained.

Depending on the type of product, the problem resolution system may:

– be documented as a part of the PEMS DEVELOPMENT LIFE-CYCLE;

– allow the reporting of potential or existing problems affecting BASIC SAFETY or ESSENTIAL PERFORMANCE;

– include an assessment of each problem for associated RISKS;

– identify the criteria that must be met for the issue to be closed;

– identify the action to be taken to resolve each problem.

Copyright International Electrotechnical Commission
Provided by IHS Markit under license with IEC
No reproduction or networking permitted without license from IHS
Not for Resale, 08/26/2020 19:12:41 MDT

14.6 RISK MANAGEMENT PROCESS

14.6.1 * Identification of known and foreseeable HAZARDS

When compiling the list of known or foreseeable HAZARDS, the MANUFACTURER shall consider those HAZARDS associated with software and hardware aspects of the PEMS including those associated with ~~NETWORK/DATA COUPLING~~ the incorporation of the PEMS into an IT-NETWORK, components of third-party origin and legacy subsystems.

NOTE In addition to the material given in ~~Annex E of ISO 14971:2007~~ Annex C of ISO 14971:2019, the list of possible causes for HAZARDS associated with PEMS ~~should~~ can include:

~~– failure of the NETWORK/DATA COUPLING to provide the characteristics necessary for the PEMS to achieve its BASIC SAFETY or ESSENTIAL PERFORMANCE;~~

– undesired feedback [physical and data] (possibilities include: unsolicited input, out of range or inconsistent input, and input originating from electromagnetic interference);

– unavailable data;

– lack of integrity of data;

– incorrect data;

– incorrect timing of data.

– unintended interactions within and among PESS;

– unknown aspects or quality of third-party software;

– unknown aspects or quality of third-party PESS;

– lack of data security, including its effects on data privacy, and particularly vulnerability to tampering, unintended interaction with other programs and viruses.

– failure of the IT-NETWORK to provide the characteristics necessary for the PEMS to achieve its BASIC SAFETY or ESSENTIAL PERFORMANCE. See Annex H.7.2 for examples.

14.6.2 * RISK CONTROL

The following requirements for PEMS supplement ~~Subclause 6.1 of ISO 14971~~ 4.2.2.

Suitably validated tools and PROCEDURES shall be selected and identified to implement each RISK CONTROL measure. These tools and PROCEDURES shall be appropriate to assure that each RISK CONTROL measure satisfactorily reduces the identified RISK(S).

14.7 * Requirement specification

For the PEMS and each of its subsystems (e.g. for a PESS) there shall be a documented requirement specification.

NOTE Example structures of a PEMS are given in H.1.

The requirement specification for a system or subsystem shall include and distinguish any ESSENTIAL PERFORMANCE and any RISK CONTROL measures implemented by that system or subsystem.

14.8 * Architecture

For the PEMS and each of its subsystems, an architecture shall be specified that shall satisfy the requirement specification.

Where appropriate, to reduce the RISK to an acceptable level, the architecture specification shall make use of:

a) COMPONENTS WITH HIGH-INTEGRITY CHARACTERISTICS;

b) fail-safe functions;

c) redundancy;

d) diversity;

e) * partitioning of functionality;

f) defensive design, e.g. limits on potentially hazardous effects by restricting the available output power or by introducing means to limit the travel of actuators.

Copyright International Electrotechnical Commission
Provided by IHS Markit under license with IEC
No reproduction or networking permitted without license from IHS Not for Resale, 08/26/2020 19:12:41 MDT

The architecture specification shall take into consideration:

g) * allocation of RISK CONTROL measures to subsystems and components of the PEMS;

NOTE Subsystems and components include sensors, actuators, PESS and interfaces.

h) failure modes of components and their effects;

i) common cause failures;

j) systematic failures;

k) test interval duration and diagnostic coverage;

l) maintainability;

m) protection from reasonably foreseeable misuse;

n) the ~~NETWORK/DATA COUPLING~~ IT-NETWORK specification, if applicable.

14.9 * Design and implementation

Where appropriate, the design shall be decomposed into subsystems, each having both a design and test specification.

Descriptive data regarding the design environment shall be ~~included in the RISK MANAGEMENT FILE~~ documented.

NOTE See ~~H.3~~ H.4 a) for examples of design environment elements.

14.10 * VERIFICATION

VERIFICATION is required for all functions that implement BASIC SAFETY, ESSENTIAL PERFORMANCE or RISK CONTROL measures.

A VERIFICATION plan shall be produced to show how these functions shall be verified. The plan shall include:

– at which milestone(s) VERIFICATION is to be performed for each function;

– the selection and documentation of VERIFICATION strategies, activities, techniques, and the appropriate level of independence of the personnel performing the VERIFICATION;

– the selection and utilization of VERIFICATION tools;

– coverage criteria for VERIFICATION.

NOTE Examples of methods and techniques are:

– walkthroughs;

– inspections;

– static analysis;

– dynamic analysis;

– white box testing;

– black box testing;

– statistical testing.

The VERIFICATION shall be performed according to the VERIFICATION plan. The results of the VERIFICATION activities shall be documented.

14.11 * PEMS VALIDATION

A PEMS VALIDATION plan shall include the validation of BASIC SAFETY and ESSENTIAL PERFORMANCE~~, and shall require checks for unintended functioning of the PEMS~~.

Methods used for PEMS VALIDATION shall be documented.

The PEMS VALIDATION shall be performed according to the PEMS VALIDATION plan. The results of PEMS VALIDATION activities shall be documented.

Copyright International Electrotechnical Commission
Provided by IHS Markit under license with IEC
No reproduction or networking permitted without license from IHS
Not for Resale, 08/26/2020 19:12:41 MDT

The person having the overall responsibility for the PEMS VALIDATION shall be independent of the design team. The MANUFACTURER shall document the rationale for the level of independence.

No member of a design team shall be responsible for the PEMS VALIDATION of their own design.

All professional relationships of the members of the PEMS VALIDATION team with members of the design team shall be documented in the RISK MANAGEMENT FILE.

~~A reference to the methods and results of the PEMS VALIDATION shall be included in the RISK MANAGEMENT FILE.~~

14.12 * Modification

If any or all of a design results from a modification of an earlier design then either all of this clause applies as if it were a new design or the continued validity of any previous design documentation shall be assessed under a documented modification/change PROCEDURE.

When software is modified, the requirements in subclause 4.3 and 4.4, Clause 5, Clause 7, Clause 8 and Clause 9 of IEC 62304:2006 and IEC 62304:2006/AMD1:2015 shall also apply to the modification.

14.13 ~~* Connection of PEMS by NETWORK/DATA COUPLING to other equipment~~ * PEMS intended to be incorporated into an IT-NETWORK

~~If the PEMS is intended to be connected by NETWORK/DATA COUPLING to other equipment that is outside the control of the PEMS MANUFACTURER, the technical description shall:~~

~~a) specify the characteristics of the NETWORK/DATA COUPLING necessary for the PEMS to achieve its INTENDED USE;~~

~~b) list the HAZARDOUS SITUATIONS resulting from a failure of the NETWORK/DATA COUPLING to provide the specified characteristics;~~

~~c) instruct the RESPONSIBLE ORGANIZATION that:~~

- ~~connection of the PEMS to a NETWORK/DATA COUPLING that includes other equipment could result in previously unidentified RISKS to PATIENTS, OPERATORS or third parties;~~
- ~~the RESPONSIBLE ORGANIZATION should identify, analyze, evaluate and control these RISKS;~~
- ~~subsequent changes to the NETWORK/DATA COUPLING could introduce new RISKS and require additional analysis; and~~
- ~~changes to the NETWORK/DATA COUPLING include:~~
  - ~~changes in NETWORK/DATA COUPLING configuration;~~
  - ~~connection of additional items to the NETWORK/DATA COUPLING;~~
  - ~~disconnecting items from the NETWORK/DATA COUPLING;~~
  - ~~update of equipment connected to the NETWORK/DATA COUPLING;~~
  - ~~upgrade of equipment connected to the NETWORK/DATA COUPLING.~~

If the PEMS is intended to be incorporated into an IT-NETWORK that is not validated by the PEMS MANUFACTURER, the MANUFACTURER shall make available instructions for implementing such connection including the following:

a) the purpose of the PEMS's connection to an IT-NETWORK;

b) the required characteristics of the IT-NETWORK incorporating the PEMS;

c) the required configuration of the IT-NETWORK incorporating the PEMS;

--`,,```,,,,````-`-`,,`,,`,`,,`---

Copyright International Electrotechnical Commission
Provided by IHS Markit under license with IEC
No reproduction or networking permitted without license from IHS Not for Resale, 08/26/2020 19:12:41 MDT

d) the technical specifications of the network connection of the PEMS including security specifications;

e) the intended information flow between the PEMS, the IT-NETWORK and other devices on the IT-NETWORK, and the intended routing through the IT-NETWORK; and

NOTE 1 This can include aspects of effectiveness and data and system security as related to BASIC SAFETY and ESSENTIAL PERFORMANCE (see also Clause H.6 and IEC 80001-1:2010).

f) a list of the HAZARDOUS SITUATIONS resulting from a failure of the IT-NETWORK to provide the characteristics required to meet the purpose of the PEMS connection to the IT-NETWORK.

NOTE 2 Connecting a PEMS to another piece of equipment for the purpose of transferring data creates a two-node IT-NETWORK. For example, connecting a PEMS to a printer creates an IT-NETWORK. If the MANUFACTURER has validated the PEMS with the printer, the resulting network would be considered within the control of the MANUFACTURER.

Compliance is checked by inspection of the instructions.

In the ACCOMPANYING DOCUMENTS, the MANUFACTURER shall instruct the RESPONSIBLE ORGANIZATION that:

– connection of the PEMS to an IT-NETWORK that includes other equipment could result in previously unidentified RISKS to PATIENTS, OPERATORS or third parties;

– the RESPONSIBLE ORGANIZATION should identify, analyze, evaluate and control these RISKS;

NOTE 3 IEC 80001-1:2010 provides guidance for the RESPONSIBLE ORGANIZATION to address these RISKS.

– subsequent changes to the IT-NETWORK could introduce new RISKS and require additional analysis; and

– changes to the IT-NETWORK include:

- changes in the IT-network configuration;
- connection of additional items to the IT-NETWORK;
- disconnecting items from the IT-NETWORK;
- update of equipment connected to the IT-NETWORK; and
- upgrade of equipment connected to the IT-NETWORK.

Compliance is checked by inspection of the ACCOMPANYING DOCUMENTS.

15 Construction of ME EQUIPMENT

15.1 * Arrangements of controls and indicators of ME EQUIPMENT

When applicable, the MANUFACTURER shall address ~~in the RISK MANAGEMENT PROCESS~~ the RISKS associated with the arrangement of controls and indicators of ME EQUIPMENT in the USABILITY ENGINEERING PROCESS. See 12.2.

Compliance is checked ~~by inspection of the RISK MANAGEMENT FILE~~ as specified in IEC 60601-1-6:2010, IEC 60601-1-6:2010/AMD1:2013 and IEC 60601-1-6:2010/AMD2:2020.

15.2 * Serviceability

Parts of ME EQUIPMENT subject to mechanical wear, electrical and environmental degradation or ageing that could result in an unacceptable RISK if allowed to continue unchecked for too long a period shall be accessible for inspection, replacement and maintenance.

Parts of ME EQUIPMENT that are likely to be replaced or adjusted shall be so located and secured as to permit inspection, servicing, replacement and adjustment without damage to, or interference with, adjacent parts or wiring.

Compliance is checked by inspection of the parts mentioned above in this subclause and of their location.

Copyright International Electrotechnical Commission
Provided by IHS Markit under license with IEC
No reproduction or networking permitted without license from IHS Not for Resale, 08/26/2020 19:12:41 MDT

15.3 Mechanical strength

15.3.1 General

ME EQUIPMENT or its parts shall have adequate mechanical strength and shall not result in ~~an unacceptable RISK~~ loss of BASIC SAFETY or ESSENTIAL PERFORMANCE due to moulding stress or when subjected to mechanical stress caused by pushing, impact, dropping, and rough handling.

Compliance is checked by application of the tests in Table 28. The tests are not applied to handles, levers, knobs, the face of cathode ray tubes (see 9.5.2), or to transparent or translucent covers of indicating or measuring devices unless with the handle, lever, knob, or cover removed there is an unacceptable RISK of electric shock.

NOTE Examples of damage that can ~~result in unacceptable RISK~~ affect BASIC SAFETY include the reduction of CREEPAGE DISTANCES and AIR CLEARANCES below those specified in 8.9, access to parts which exceed limits in 8.4, or access to moving parts which could cause HARM.

Assessment criteria that can be useful in determining if ~~the tests in Table 28 have~~ this test has resulted in ~~an unacceptable RISK~~ loss of BASIC SAFETY include:

– those in Clause 8 and 11.6;

– the dielectric strength test as specified in 8.8.3 to evaluate the integrity of solid ~~SUPPLEMENTARY or REINFORCED INSULATION~~ INSULATION providing a MEANS OF PROTECTION; and

– measurement of CREEPAGE DISTANCES or AIR CLEARANCES to compare the values with the minimum distances specified in 8.9. Small chips that do not adversely affect the protection against electric shock or moisture can normally be ignored.

Table 28 – Mechanical strength test applicability

ME EQUIPMENT type	Test
HAND-HELD	Push (15.3.2)
	Drop (15.3.4.1)
	Moulding stress relief (15.3.6)
BODY-WORN	Push (15.3.2)
	Impact (15.3.3)
	Drop (15.3.4.1)
	Moulding stress relief (15.3.6)
PORTABLE	Push (15.3.2)
	Impact (15.3.3)
	Drop (15.3.4.2)
	Moulding stress relief (15.3.6)
MOBILE	Push (15.3.2)
	Impact (15.3.3)
	Rough handling (15.3.5)
	Moulding stress relief (15.3.6)
FIXED or STATIONARY	Push (15.3.2)
	Impact (15.3.3)
	Moulding stress relief (15.3.6)

15.3.2 * Push test

ENCLOSURES of ME EQUIPMENT shall have sufficient rigidity to protect against unacceptable RISK.

--`,,```,,,,````-`-`,,`,,`,`,,`---
Copyright International Electrotechnical Commission
Provided by IHS Markit under license with IEC
No reproduction or networking permitted without license from IHS
Not for Resale, 08/26/2020 19:12:41 MDT

Compliance is checked by the following test.

External parts of an ENCLOSURE *are subject to a steady force of 250 N ± 10 N for a period of 5 s, applied by means of a suitable test tool providing contact over a circular plane surface 30 mm in diameter. However, this test is not applied to the bottom of an* ENCLOSURE *of* ME EQUIPMENT *having a mass of more than 18 kg.*

After the test, any damage sustained that results in an unacceptable RISK~~, as determined by inspection of the RISK MANAGEMENT FILE,~~ *constitutes a failure.*

NOTE See the compliance criteria in 15.3.1.

15.3.3 * Impact test

ENCLOSURES of ME EQUIPMENT shall have sufficient resistance to impact to protect against unacceptable RISK.

Compliance is checked by the following test.

Except for HAND-HELD ME EQUIPMENT *and* ME EQUIPMENT *parts that are* HAND-HELD, ENCLOSURES *and other external insulating parts, the deterioration of which could result in unacceptable* RISK, *are tested as indicated below.*

A sample consisting of the complete ENCLOSURE, *or a portion thereof representing the largest unreinforced area, is supported in its normal position. A solid smooth steel ball, approximately 50 mm in diameter and with a mass of 500 g ± 25 g, is permitted to fall freely from a 1,3 m height once onto each relevant part of the test sample.*

To test vertical surfaces, the steel ball is suspended by a cord and allowed to swing like a pendulum in order to apply a horizontal impact, dropping though a vertical distance of 1,3 m once against each relevant part of the test sample.

The test is not applied to flat panel displays, to the platen glass of ME EQUIPMENT *(for example film scanners), or to cathode ray tubes (see 9.5.2).*

After the test, any damage sustained that results in an unacceptable RISK~~, as determined by inspection of the RISK MANAGEMENT FILE,~~ *constitutes a failure.*

NOTE See the compliance criteria in 15.3.1.

15.3.4 * Drop test

15.3.4.1 HAND-HELD ME EQUIPMENT

HAND-HELD ME EQUIPMENT, ACCESSORIES and ME EQUIPMENT parts~~ that are HAND-HELD~~ shall not result in an unacceptable RISK as a result of a free fall.

Compliance is checked by the following test.

The sample to be tested, with any SAFE WORKING LOAD *in place, is allowed to fall freely once from each of three different starting orientations encountered during* NORMAL USE *from the height at which the* ME EQUIPMENT, ACCESSORY *or* ME EQUIPMENT *part is used (as specified in the* ACCOMPANYING DOCUMENTS*), or from a height of 1 m, whichever is greater, onto a 50 mm ± 5 mm thick hardwood board (for example, hardwood density > 600 kg/m³) lying flat on a concrete or a similar rigid base.*

After the test, the HAND-HELD ME EQUIPMENT~~ and~~, ACCESSORY *or* ME EQUIPMENT *part~~s that are HAND-HELD~~ shall not result in an unacceptable* RISK.

15.3.4.2 * PORTABLE ME EQUIPMENT

PORTABLE ME EQUIPMENT, ACCESSORIES and ME EQUIPMENT parts~~ that are PORTABLE~~ shall withstand the stress caused by a free fall from the height indicated in Table 29 onto a hard surface.

--`,,`,,`-`-`,,`,,`,`,,`---

Copyright International Electrotechnical Commission
Provided by IHS Markit under license with IEC
No reproduction or networking permitted without license from IHS Not for Resale, 08/26/2020 19:12:41 MDT

Compliance is checked by the following test.

The sample to be tested, with the SAFE WORKING LOAD in place, is lifted to a height as indicated in Table 29 above a 50 mm ± 5 mm thick hardwood board (for example, hardwood density > 600 kg/m3) that lies flat on a concrete floor or a similar rigid base. The dimensions of the board are at least those of the sample tested. The sample is dropped three times from each orientation in which it can be placed during NORMAL USE.

Table 29 – Drop height

Mass (*m*) of PORTABLE ME EQUIPMENT or its parts kg	**Drop height** cm
$m \leq 10$	5
$10 < m \leq 50$	3
$m > 50$	2

After the test, any damage sustained that results in a unacceptable RISK~~, as determined by inspection of the RISK MANAGEMENT FILE and inspection of the ME EQUIPMENT or the ME EQUIPMENT parts that are PORTABLE,~~ constitutes a failure.

NOTE See the compliance criteria in 15.3.1.

15.3.5 * Rough handling test

MOBILE ME EQUIPMENT and ME EQUIPMENT parts that are MOBILE shall withstand the stress caused by rough handling and movement and shall not result in an unacceptable RISK.

Compliance is checked by the following tests.

The sample is tested in transport position with any SAFE WORKING LOAD in place and in the most adverse condition permitted in NORMAL USE. During the test, suitable precautions shall be taken to prevent over-balance caused by the rough handling stress/shock.

a) Ascending step shock

The sample is pushed three times in its normal direction of travel at a speed of ~~0,4~~ 0,8 m/s ± 0,1 m/s, or, for motor-driven MOBILE ME EQUIPMENT, at the maximum speed capable of being maintained, against ~~an ascending hardwood step obstruction with vertical~~ a solid hardwood plane obstruction with a face of 40 mm ± 2 mm that is rigidly attached to an otherwise flat floor. The direction of movement is perpendicular to the face of the obstacle. The sample need not go over the 40 mm ± 2 mm obstruction.

b) Descending step shock

The sample is pushed three times in its normal direction of travel at a speed of ~~0,4~~ 0,8 m/s ± 0,1 m/s, or, for motor-driven MOBILE ME EQUIPMENT, at the maximum speed capable of being maintained, in order to fall over a vertical step having a height of 40 mm ± 2 mm affixed flat on a rigid base (e.g. concrete). The direction of movement is perpendicular to the face of the descending step.

During performance of the descending step shock test, if a part other than the castor comes in contact with the obstruction before the castor touches the ground, the ME EQUIPMENT continues to be pushed until it has fully descended.

Copyright International Electrotechnical Commission
Provided by IHS Markit under license with IEC
No reproduction or networking permitted without license from IHS
Not for Resale, 08/26/2020 19:12:41 MDT

c) Door frame shock

The sample is moved three times in its normal direction of travel at a speed of ~~0,4~~ 0,8 m/s ± 0,1 m/s, or, for motor driven MOBILE ME EQUIPMENT, the maximum speed capable of being maintained, against a hardwood vertical obstacle having a width and thickness of 40 mm ± 2 mm affixed to a vertical rigid support (e.g. concrete). The height of the vertical obstacle must be higher than the ME EQUIPMENT contact point(s). The direction of movement is perpendicular to the face of the obstacle.

After each test, any damage sustained that results in an unacceptable RISK~~, as determined by inspection of the RISK MANAGEMENT FILE and inspection of the ME EQUIPMENT or the ME EQUIPMENT parts that are MOBILE,~~ constitutes a failure.

NOTE 1 See compliance criteria in 15.3.1.

NOTE 2 Instability of ME EQUIPMENT, when the ME EQUIPMENT remains undamaged from the rough handling shock/stress, is evaluated in accordance with 9.4.

15.3.6 * Mould stress relief test

ENCLOSURES of moulded or formed thermoplastic materials shall be so constructed that any shrinkage or distortion of the material due to release of internal stresses caused by the moulding or forming operation does not result in an unacceptable RISK.

Compliance is checked by inspection of the construction and available data were appropriate or by the following test.

One sample consisting of the complete ME EQUIPMENT, or of the ENCLOSURE together with any supporting framework, is placed in a circulating air oven at a temperature 10 °C higher than the maximum temperature observed on the ENCLOSURE during the test of 11.1.3, but not less than 70 °C, for a period of 7 h, then permitted to cool to room temperature.

NOTE Relative humidity need not be maintained at a specific value during this conditioning.

For large ME EQUIPMENT where it is not practical to condition a complete ENCLOSURE, it is permitted to use a portion of the ENCLOSURE representative of the complete assembly with regard to thickness and shape, including any mechanical support members.

Any damage that results in an unacceptable RISK constitutes a failure.

15.3.7 * Environmental influences

The selection and treatment of materials used in the construction of ME EQUIPMENT shall take account of the INTENDED USE, the EXPECTED SERVICE LIFE and the conditions for transport and storage.

The ME EQUIPMENT shall be so designed and constructed that during its EXPECTED SERVICE LIFE any corrosion, ageing, mechanical wear, or degradation of biological materials due to the influence of bacteria, plants, animals and the like, shall not reduce its mechanical properties in a way that results in an unacceptable RISK. See also 15.2.

Compliance is checked by inspection:

– *of the ME EQUIPMENT, of the ACCOMPANYING DOCUMENTS and of the MANUFACTURER'S specifications of materials used and of the processing specifications for these materials;*

– *of the MANUFACTURER'S relevant tests or calculations.*

15.4 ME EQUIPMENT components and general assembly

15.4.1 Construction of connectors

Design and construction of electrical, hydraulic, pneumatic and gas connection terminals and connectors of ME EQUIPMENT shall be such that incorrect connection of accessible connectors, removable without the use of a TOOL, shall be prevented where an unacceptable RISK would otherwise exist. In particular:

Copyright International Electrotechnical Commission
Provided by IHS Markit under license with IEC
No reproduction or networking permitted without license from IHS
Not for Resale, 08/26/2020 19:12:41 MDT

a) Plugs for connection of PATIENT leads or PATIENT cables shall be so designed that they cannot be connected to ~~other~~ outlets on the same ME EQUIPMENT intended for other functions, unless it can be proven that no unacceptable RISK can result.

Compliance is checked by inspection of PATIENT leads, PATIENT cables, connectors and outlets and, if interchange of the leads, cables, connectors or outlets is possible, by inspection of the RISK MANAGEMENT FILE.

b) Medical gas connections on ME EQUIPMENT for different gases to be operated in NORMAL USE shall not be interchangeable. See also ISO 407 [27].

Compliance is checked by inspection of ~~the RISK MANAGEMENT FILE~~ all medical gas connectors.

15.4.2 Temperature and overload control devices

15.4.2.1 Application

a) THERMAL CUT-OUTS and OVER-CURRENT RELEASES with automatic resetting shall not be used in ME EQUIPMENT if their use could ~~result in~~ lead to a HAZARDOUS SITUATION described in 13.1 by such resetting.

Compliance is checked by inspection of the design documentation and the RISK MANAGEMENT FILE.

b) THERMAL CUT-OUTS with a safety function that have to be reset by a soldering operation that can affect the operating value shall not be fitted in ME EQUIPMENT.

Compliance is checked by inspection of the design documentation ~~and the RISK MANAGEMENT FILE~~.

c) In ME EQUIPMENT, where a failure of a THERMOSTAT could ~~constitute~~ lead to a ~~HAZARD~~ HAZARDOUS SITUATION described in 13.1, an independent non-SELF-RESETTING THERMAL CUT-OUT shall additionally be provided. The temperature of operation of the additional device shall be outside that attainable at the extreme setting of the normal control device (THERMOSTAT) but shall be within the safe temperature limit for ~~its~~ the intended function of the ME EQUIPMENT .

Compliance is checked by inspection of the design documentation and the RISK MANAGEMENT FILE.

d) Loss of function of the ME EQUIPMENT caused by operation of a THERMAL CUT-OUT or OVER-CURRENT RELEASE shall not result in ~~a~~ the loss of ESSENTIAL PERFORMANCE or any of the HAZARDOUS SITUATIONS described in 13.1.

Compliance is checked by inspection of the design documentation and the RISK MANAGEMENT FILE.

e) Capacitors or other spark-suppression devices of ME EQUIPMENT shall not be connected between the contacts of THERMAL CUT-OUTS.

Compliance is checked by inspection.

f) The use of a THERMAL CUT-OUT or OVER-CURRENT RELEASE in the design shall not affect the safety of the ME EQUIPMENT.

Compliance is checked by inspection and, if applicable, by the following tests.

Verify compliance of positive temperature coefficient devices (PTC's) with IEC 60730-1: ~~1999~~2010, clauses 15, 17, J.15 and J.17 as applicable.

Copyright International Electrotechnical Commission
Provided by IHS Markit under license with IEC
No reproduction or networking permitted without license from IHS
Not for Resale, 08/26/2020 19:12:41 MDT

THERMAL CUT-OUTS and OVER-CURRENT RELEASES are tested by operating the ME EQUIPMENT under the conditions described in Clause 13.

SELF-RESETTING THERMAL CUT-OUTS and self-resetting OVER-CURRENT RELEASES including circuits that perform equivalent functions (other than PTC's) are caused to operate 200 times unless approved to the appropriate IEC component standard.

Manual reset THERMAL CUT-OUTS and OVER-CURRENT RELEASES are caused to operate 10 times, if they are not approved to the appropriate IEC component standard (see 4.5) or the MANUFACTURER has not provided adequate data to demonstrate the reliability of the component to perform its safety-related function.

Thermal protection devices can be tested separately from ME EQUIPMENT where engineering judgement indicates that doing so would not impact the test results.

g) ME EQUIPMENT that incorporates a fluid filled container having heating facilities shall be provided with a protection device to safeguard against overheating in the event of the heater being switched on with the container empty. An unacceptable RISK shall not occur from overheating.

Compliance is checked by operating the relevant ME EQUIPMENT with an empty container until the protection device activates.

h) ME EQUIPMENT that incorporates tubular heating elements shall have protection against overheating in both leads where a conductive connection to earth could result in overheating.

Compliance is checked by inspection of the design documentation and the RISK MANAGEMENT FILE.

15.4.2.2 Temperature settings

Where means are provided for varying the temperature setting of THERMOSTATS in ME EQUIPMENT, the temperature setting shall be clearly indicated.

Compliance is checked by inspection.

15.4.3 * Batteries

15.4.3.1 Housing

In ME EQUIPMENT, housings containing batteries from which gases ~~that are likely to result in a HAZARD~~ can escape during charging or discharging shall be ventilated ~~to minimize the RISK of accumulation and ignition~~ so that there is no unacceptable RISK from the accumulation of gases and possible ignition is prevented.

Battery compartments of ME EQUIPMENT shall be designed to prevent accidental short circuiting of the battery where such short circuits could result in ~~a~~ the HAZARDOUS SITUATIONS described in 13.1.

Compliance is checked by inspection of the design documentation and the RISK MANAGEMENT FILE.

15.4.3.2 Connection

If a HAZARDOUS SITUATION might develop by the incorrect connection or replacement of a battery, ME EQUIPMENT shall be fitted with a means of preventing incorrect polarity of connection. See also 7.3.3 and 8.2.2.

Compliance is checked by inspection.

Copyright International Electrotechnical Commission
Provided by IHS Markit under license with IEC
No reproduction or networking permitted without license from IHS
Not for Resale, 08/26/2020 19:12:41 MDT

15.4.3.3 Protection against overcharging

Where overcharging of any battery of ME EQUIPMENT could result in an unacceptable RISK, the design shall prevent overcharging.

Compliance is checked by inspection of the design documentation.

15.4.3.4 Lithium batteries

~~Lithium batteries used in ME EQUIPMENT that could become a HAZARD shall comply with the requirements of IEC 60086-4. See also 7.3.3.~~

Primary lithium batteries shall comply with the requirements of IEC 60086-4. Secondary lithium batteries shall comply with the requirements of IEC 62133 or IEC 62133-2. See also 7.3.3.

NOTE Batteries includes both single cells and assemblies of cells, i.e. battery packages.

Compliance is checked by inspection of the battery design documentation or by performance of the tests identified in IEC 60086-4 for primary lithium batteries and IEC 62133 or IEC 62133-2 for secondary lithium batteries.

15.4.3.5 * Excessive current and voltage protection

An INTERNAL ELECTRICAL POWER SOURCE in ME EQUIPMENT shall be provided with an appropriately RATED device for protection against fire caused by excessive currents if the cross-sectional area and layout of the internal wiring or the rating of connected components can give rise to a fire in case of a short circuit. Protective devices shall have adequate breaking capacity to interrupt the maximum fault current (including short-circuit current) which can flow. Justification for omission of fuses or OVER-CURRENT RELEASES shall be ~~included in the RISK MANAGEMENT FILE~~ documented.

The short circuit test between the positive pole and the negative pole of an INTERNAL ELECTRICAL POWER SOURCE in the area between the INTERNAL ELECTRICAL POWER SOURCE output contacts and the subsequent protection device may be omitted if two MEANS OF OPERATOR PROTECTION are provided. Alternatively, a short-circuit test shall not result in any of the HAZARDOUS SITUATIONS in 13.1.2.

Compliance is checked by inspection for the presence of protective means, and if necessary, by inspection of the design documentation ~~and the RISK MANAGEMENT FILE~~. Alternatively, conduct the short-circuit test and none of the HAZARDOUS SITUATIONS in 13.1.2 shall occur.

15.4.4 * Indicators

Unless it is otherwise apparent to the OPERATOR from the normal operating position, indicator lights shall be provided to indicate that ME EQUIPMENT is ready for NORMAL USE. The marking of 7.4.1 is not sufficient for this purpose.

If equipped with a stand-by state or a warm-up state whose duration exceeds 15 s, the ME EQUIPMENT shall be provided with an additional indicator light unless it is otherwise apparent to the OPERATOR from the normal operating position.

Indicator lights shall be provided on ME EQUIPMENT incorporating non-luminous heaters to indicate that the heaters are operational, if a HAZARDOUS SITUATION could exist unless it is otherwise apparent to the OPERATOR from the normal operating position.

NOTE This does not apply to heated stylus-pens for recording purposes.

Indicator lights shall be provided on ME EQUIPMENT to indicate that an output exists where an accidental or prolonged operation of the output circuit could constitute a HAZARDOUS SITUATION.

Colours of indicator lights are described in 7.8.1.

--`,,```,,,,````-`-`,,`,,`,`,,`---

Copyright International Electrotechnical Commission
Provided by IHS Markit under license with IEC
No reproduction or networking permitted without license from IHS Not for Resale, 08/26/2020 19:12:41 MDT

In ME EQUIPMENT incorporating a means for charging an INTERNAL ELECTRICAL POWER SOURCE, the charging mode shall be visibly indicated to the OPERATOR.

Compliance is checked by inspection of the presence and function of indicating means visible from the position of NORMAL USE.

15.4.5 Pre-set controls

When applicable, the MANUFACTURER shall address in the RISK MANAGEMENT PROCESS the RISKS associated with pre-set controls.

Compliance is checked by inspection of the RISK MANAGEMENT FILE.

15.4.6 Actuating parts of controls of ME EQUIPMENT

15.4.6.1 Fixing, prevention of maladjustment

a) All actuating parts of ME EQUIPMENT shall be so secured that they cannot be pulled off or work loose during NORMAL USE.

b) Controls~~, the adjustment of which can result in a HAZARDOUS SITUATION for the PATIENT or OPERATOR while ME EQUIPMENT is in use,~~ shall be so secured that the indication of any scale always corresponds with the position of the control.

~~The indication in this case refers to "on" or "off" position, scale markings or other indications of position.~~

c) Incorrect connection of the indicating device to the relevant component shall be prevented by an adequate construction, if it can be separated without the use of a TOOL.

Compliance is checked by inspection and tests. For rotating controls, the torques as shown in Table 30 are applied between the control knob and the shaft for not less than 2 s in each direction alternately. The test is repeated 10 times.

A knob that rotates with respect to the shaft constitutes a failure.

If an axial pull is required in NORMAL USE, compliance is checked by applying for 1 min an axial force of 60 N for electrical components and 100 N for other components.

Table 30 – Test torques for rotating controls

Gripping diameter (*d*) of control knob mm [a]	**Torque** Nm
$10 \leq d < 23$	1,0
$23 \leq d < 31$	2,0
$31 \leq d < 41$	3,0
$41 \leq d < 56$	4,0
$56 \leq d \leq 70$	5,0
$d > 70$	6,0
[a] The gripping diameter (*d*) is the maximum width of a control knob regardless of its shape (e.g. control knob with pointer).	

15.4.6.2 Limitation of movement

Stops of adequate mechanical strength shall be provided on rotating or movable parts of controls of ME EQUIPMENT, where necessary to prevent an unexpected change from maximum

Copyright International Electrotechnical Commission
Provided by IHS Markit under license with IEC
No reproduction or networking permitted without license from IHS
Not for Resale, 08/26/2020 19:12:41 MDT

to minimum, or vice-versa, of the controlled parameter ~~where this could produce a HAZARDOUS SITUATION~~.

Compliance is checked by inspection and manual tests. For rotating controls, the torques as shown in Table 30 are applied for not less than 2 s in each direction alternately. The test is repeated 10 times.

If an axial pull is likely to be applied to the rotating or movable parts of controls of ME EQUIPMENT in NORMAL USE~~, no unacceptable RISK shall develop~~ there shall be no unexpected change of the controlled parameter.

Compliance is checked by applying for 1 min an axial force of 60 N for electrical components and 100 N for other components.

15.4.7 Cord-connected HAND-HELD and foot-operated control devices (see also 8.10.4)

15.4.7.1 Mechanical strength

a) HAND-HELD control devices of ME EQUIPMENT shall comply with 15.3.4.1.

b) Foot-operated control devices of ME EQUIPMENT shall be able to support the weight of an adult human being.

Compliance is checked by application to the foot-operated control device, in its position of NORMAL USE, of an actuating force of 1 350 N for 1 min. The force is applied over an area of 30 mm diameter. There shall be no damage to the device resulting in an unacceptable RISK.

15.4.7.2 Accidental operation of ME EQUIPMENT

HAND-HELD and foot-operated control devices shall not result in an unacceptable RISK by changing their control setting when accidentally placed in an abnormal position.

Compliance is checked by turning the control device in all possible abnormal positions and placing it on a flat surface. Any inadvertent change of control setting resulting in an unacceptable RISK constitutes a failure.

15.4.7.3 * Entry of liquids

a) Foot-operated control devices of ME EQUIPMENT shall be at least IPX1 according to IEC 60529.

Compliance is checked by the tests of IEC 60529.

b) In ME EQUIPMENT, ENCLOSURES of foot operated control devices used in areas such as emergency rooms or operating theatres where liquids are likely to be present at floor level and that contain electrical circuits shall be classified at least IPX6 according to IEC 60529 ~~if they are intended for NORMAL USE in areas where liquids are likely to be found (such as emergency rooms and operating theatres). The probability of occurrence shall be estimated as part of the RISK MANAGEMENT PROCESS~~.

Compliance is determined by inspection of the ACCOMPANYING DOCUMENTS, the design documentation~~, the RISK MANAGEMENT FILE~~ and by performing the appropriate tests of IEC 60529.

15.4.8 Internal wiring of ME EQUIPMENT

Aluminium wires of less than 16 mm^2 cross-section shall not be used in ME EQUIPMENT.

Compliance is checked by inspection.

Copyright International Electrotechnical Commission
Provided by IHS Markit under license with IEC
No reproduction or networking permitted without license from IHS
Not for Resale, 08/26/2020 19:12:41 MDT

15.4.9 Oil containers

a) Oil containers in PORTABLE ME EQUIPMENT shall be adequately sealed to prevent loss of oil in any position. The container design shall allow for the expansion of the oil.

b) Oil containers in MOBILE ME EQUIPMENT shall be sealed to prevent the loss of oil during transport but may be fitted with a pressure-release device that can operate during NORMAL USE.

c) Partially sealed oil-filled ME EQUIPMENT or its parts shall be provided with means for checking the oil level so that leakage can be detected (see 7.9.3.1).

Compliance is checked by inspection of the ME EQUIPMENT, the technical description, and by manual test.

15.5 * MAINS SUPPLY TRANSFORMERS of ME EQUIPMENT and transformers providing separation in accordance with 8.5

15.5.1 Overheating

15.5.1.1 * Transformers

Transformers of ME EQUIPMENT shall be protected against overheating in the event of short circuit or overload of any output winding.

Compliance is checked by the tests of 15.5.1.2 and 15.5.1.3 as appropriate under the following conditions.

Each winding is tested, in turn, with the following parameters at the most adverse value:

– *primary voltage maintained between 90 % to 110 % of RATED voltage*

– *RATED input frequency*

– *loads on other windings between no load and their NORMAL USE load*

Short circuit or resistive load, as appropriate, is applied at the ends of the windings or at the first point that can be short circuited under SINGLE FAULT CONDITION.

Components intended to prevent overheating of the transformer during short circuit and overload conditions are included as part of the tests of 15.5.1.2 and 15.5.1.3 provided that ~~it is unlikely that a short circuit or overload condition could arise for which they would not provide protection. Failure of such circuits to provide protection are considered unlikely to occur where insulation (including spacing) is equal to at least one MEANS OF OPERATOR PROTECTION as defined in Clause 8 and COMPONENTS WITH HIGH-INTEGRITY CHARACTERISTICS are used.~~:

– *the component is one with high-integrity characteristics, and*

– *two MEANS OF OPERATOR PROTECTION are provided between the output contacts of the transformer up to the COMPONENT WITH HIGH-INTEGRITY CHARACTERISTICS.*

During the tests, no winding are to open, no HAZARDOUS SITUATION occurs, and the maximum temperatures of windings are not to exceed the values in Table 31. After the short circuit and overload tests, the transformer is to pass the dielectric strength test (as described in 8.8.3) between primary and secondary windings, between the primary windings and the frame and between the secondary windings and the frame. The tests are performed under the conditions specified in 11.1, either in the ME EQUIPMENT or under simulated conditions on the bench.

Copyright International Electrotechnical Commission
Provided by IHS Markit under license with IEC
No reproduction or networking permitted without license from IHS
Not for Resale, 08/26/2020 19:12:41 MDT

Table 31 – Maximum allowable temperatures of transformer windings under overload and short-circuit conditions at 25 °C (± 5 °C) ambient temperature

Parts	Maximum temperature °C
Windings and core laminations in contact therewith, if the winding insulation is:	
– of Class A material	150
– of Class B material	175
– of Class E material	165
– of Class F material	190
– of Class H material	210

15.5.1.2 Short-circuit test

The output winding under test is short circuited. The test is continued until the protective device operates or THERMAL STABILITY is achieved. For transformers not tested according to the 5X frequency and 5X voltage test of 15.5.2 a) or the 2X frequency and 2X voltage test of 15.5.2 b), the short circuit is applied directly across the output windings.

15.5.1.3 Overload test

Windings with more than one protective device could require multiple overload tests in order to fully evaluate worst-case NORMAL USE loading and fusing.

The overload test may be applied after rectification.

If the short-circuit test is completed without operation of a protective device (such as a current limiting circuit), the overload test is not required.

a) This test (a) is performed if the current at which the protective device operates cannot be determined based on a review of the provided protective devices and their performance data; otherwise test b) is performed.

The winding under test is loaded to its NORMAL USE load until THERMAL STABILITY is reached. The load is then progressively adjusted in appropriate steps to approach the minimum current at which the protective device operates. Each adjustment of the load is followed by a sufficient time to reach THERMAL STABILITY, and the load current and temperature are to be noted.

Following operation of a protective device, b) is performed.

b) If the protective device that operated in a) is external to the transformer, it is shunted. The winding under test is loaded based on the type of protective device as follows.

- *Fuse in accordance with IEC 60127-1:*

  30 min at the appropriate test current determined from Table 32.

Copyright International Electrotechnical Commission
Provided by IHS Markit under license with IEC
No reproduction or networking permitted without license from IHS
Not for Resale, 08/26/2020 19:12:41 MDT

Table 32 – Test current for transformers

Marked value of RATED current (*I*) of protecting fuse-link A	Ratio between test current and RATED current of the fuse-link
$I \leq 4$	2,1
$4 < I \leq 10$	1,9
$10 < I \leq 25$	1,75
$I > 25$	1,6

– *Fuses not in accordance with IEC 60127-1:*

30 min at the current according to the characteristics supplied by the fuse manufacturer, specifically the 30 min clearing-time current. If no 30 min clearing-time current data is available, the test current from Table 32 is used until THERMAL STABILITY is achieved.

– *Other protective device:*

until THERMAL STABILITY at a current just below that which caused the device to operate in a).

This portion of the overload test is concluded at the specified time or when a second protective device opens.

15.5.2 * Dielectric strength

This subclause is not applicable to transformers operating at a frequency above 1 kHz, which are tested in accordance with 8.8.3.

ME EQUIPMENT transformer windings shall have adequate insulation to prevent internal short-circuits that could cause overheating where such overheating could result in a HAZARDOUS SITUATION.

The dielectric strength of the electrical insulation between turns and layers of each winding of a transformer of ME EQUIPMENT where failure of the transformer could result in a HAZARDOUS SITUATION shall be such that after the humidity preconditioning treatment (see 5.7) it passes the following tests.

a) *Transformer windings having a RATED voltage ≤ 500 V or RATED frequency ≤ 60 Hz are tested with a voltage across the winding of five times the RATED voltage or five times the upper limit of the RATED voltage range of that winding and a frequency not less than five times the RATED frequency (where RATED frequency is the normal operating frequency of the transformer input voltage).*

b) *Transformer windings having a RATED voltage exceeding 500 V or RATED frequency exceeding 60 Hz are tested with a voltage across that winding of twice the RATED voltage or twice the upper limit of the RATED voltage range of that winding and a frequency not less than twice the RATED frequency (where RATED frequency is the normal operating frequency of the transformer input voltage).*

In the two cases above, however, the stress on the turn and layer insulation of any winding of the transformer is to be such that the test voltage appearing at the winding with the highest RATED voltage does not exceed the test voltage specified in Table 6, for one MEANS OF PROTECTION, if the RATED voltage of such a winding is considered as the WORKING VOLTAGE. If this should occur, the test voltage on the primary winding is reduced accordingly. The test frequency can be adapted to produce in the core approximately the magnetic induction present in NORMAL USE. Where the core of the transformer is isolated from all external conductive connections (such as in most toroidal transformers), connections to the core described below may be omitted.

Copyright International Electrotechnical Commission
Provided by IHS Markit under license with IEC
No reproduction or networking permitted without license from IHS Not for Resale, 08/26/2020 19:12:41 MDT

– *Three-phase transformers can be tested by means of a three-phase testing device or by three consecutive tests using a single-phase testing device.*

– *The value of the test voltage with respect to the core and to any screen between primary and secondary windings is in accordance with the specification of the relevant transformer. If the primary winding has an identified connection point for the neutral of the SUPPLY MAINS such a point is connected to the core (and screen if present) unless the core (and screen) are specified for connection to an unearthed part of the circuit. To simulate this, the core (and screen) are connected to a source with an appropriate voltage and frequency with respect to the identified connection point.*

  If such a connection point has not been identified, each side of the primary winding in turn is connected to the core (and screen if present) unless the core (and screen) are specified for connection to an unearthed part of the circuit.

  To simulate this, the core (and screen) are connected to a source with an appropriate voltage and frequency with respect to each side of the primary winding in turn.

– *During the test, all windings not intended for connection to the SUPPLY MAINS are left unloaded (open circuit). Windings intended to be earthed at a point or to be operated with a point nearly at earth potential are to have such a point connected to the core, unless the core is specified for connection to an unearthed part of the circuit.*

  To simulate this, the core is connected to a source with an appropriate voltage and frequency with respect to such windings.

– *Initially not more than half the prescribed voltage is applied, then, it is raised over a period of 10 s to the full value, which is then maintained for 1 min, after which the voltage is reduced gradually and switched off.*

– *Tests are not conducted at resonant frequencies.*

Compliance is checked by the following:

During the test, any flashover or breakdown of any part of the insulation constitutes a failure. There is to be no detectable deterioration of the transformer after the test.

Slight corona discharges are neglected, provided that they cease when the test voltage is temporarily dropped to a lower value, that this value is higher than the WORKING VOLTAGE and that the discharges do not provoke a drop in test voltage.

15.5.3 * Construction of transformers used to provide separation as required by 8.5

~~Transformers of ME EQUIPMENT that form MEANS OF PROTECTION as required by 8.5 shall comply with IEC 61558-1:1997, Subclause 5.12.~~

~~*Compliance is checked as specified in IEC 61558-1.*~~

Transformers of ME EQUIPMENT that form MEANS OF PROTECTION as required by 8.5 shall comply with the following:

– Means shall be provided to prevent displacement of end turns beyond the interwinding insulation.

– If a protective earthed screen has only one turn, it shall have an insulated overlap of not less than 3 mm. The width of the screen shall be at least equal to the axial winding length of the primary winding.

– The exit of the wires from the internal windings of toroidal transformers shall be provided with double sleeving complying with the requirements for two MEANS OF PROTECTION and having a total wall thickness of at least 0,3 mm, extending at least 20 mm outside the winding.

– The insulation between primary and secondary windings shall comply with 8.8.2.

– CREEPAGE DISTANCES and AIR CLEARANCES shall comply with 8.9.4 with the following exceptions:

--`,,`,,`-`-`,,`,,`,`,,`---

Copyright International Electrotechnical Commission
Provided by IHS Markit under license with IEC
No reproduction or networking permitted without license from IHS Not for Resale, 08/26/2020 19:12:41 MDT

- Enamelled or lacquered winding wires are considered as contributing 1 mm each to the CREEPAGE DISTANCES specified in 8.9.4 for MEANS OF PATIENT PROTECTION.
- CREEPAGE DISTANCES are measured through the joint between two parts of an insulation barrier, except when:
  – either the two parts forming the joint are bonded by heat sealing or other similar means at the place where this is of importance;

  or

  – the joint is completely filled with adhesive at the necessary places and the adhesive bonds to the surfaces of the insulating barrier so that humidity cannot be sucked into the joint.
- CREEPAGE DISTANCES within moulded transformers are considered not to exist if it can be shown that no gas bubbles are present and the thickness of the insulation between enamelled or lacquered primary and secondary windings is at least 1 mm for reference voltages *U* not exceeding 250 V and increased proportionally for higher reference voltages.

Compliance is checked by inspection of the transformer construction and measurement of required distances.

16 * ME SYSTEMS

16.1 * General requirements for the ME SYSTEMS

After installation or subsequent modification, an ME SYSTEM shall not result in an unacceptable RISK.

Only HAZARDS arising from combining various equipment to constitute an ME SYSTEM shall be considered.

NOTE RESPONSIBLE ORGANIZATIONS are reminded that the assembly of ME SYSTEMS and modifications during the actual service life require evaluation to the requirements of this standard.

An ME SYSTEM shall provide:

– within the PATIENT ENVIRONMENT, the level of safety equivalent to ME EQUIPMENT complying with this standard; and

– outside the PATIENT ENVIRONMENT, the level of safety equivalent to equipment complying with their respective IEC or ISO safety standards.

Tests shall be performed:

– in NORMAL CONDITION unless otherwise specified, and

– under the operating conditions specified by the MANUFACTURER of the ME SYSTEM.

Safety tests that have already been performed on individual equipment of the ME SYSTEM according to relevant standards shall not be repeated.

The MANUFACTURER of an ME SYSTEM that is (re)configurable by the RESPONSIBLE ORGANIZATION or OPERATOR may use RISK MANAGEMENT methods to determine which configurations constitute the highest RISKS and which measures are needed to ensure that the ME SYSTEM in any possible configuration does not present an unacceptable RISK.

Non-ME EQUIPMENT, when used in an ME SYSTEM, shall comply with IEC or ISO safety standards that are relevant to that equipment.

Equipment in which protection against electric shock relies only on BASIC INSULATION shall not be used in an ME SYSTEM.

Compliance is checked by inspection of appropriate documents or certificates.

Copyright International Electrotechnical Commission
Provided by IHS Markit under license with IEC
No reproduction or networking permitted without license from IHS Not for Resale, 08/26/2020 19:12:41 MDT

16.2 * ACCOMPANYING DOCUMENTS of an ME SYSTEM

An ME SYSTEM, (including a modified ME SYSTEM), shall be accompanied by documents containing all the data necessary for the ME SYSTEM to be used as intended by the MANUFACTURER, and an address to which the RESPONSIBLE ORGANIZATION can refer. The ACCOMPANYING DOCUMENTS shall be regarded as a part of the ME SYSTEM.

NOTE ACCOMPANYING DOCUMENTS can be provided electronically, e.g. electronic file format or CD-ROM, for an ME SYSTEM capable of displaying or printing those documents.

These documents shall include:

a) the ACCOMPANYING DOCUMENTS for each item of ME EQUIPMENT that is provided by the MANUFACTURER (see ~~7.8.2~~ 7.9);

b) the ACCOMPANYING DOCUMENTS for each item of non-ME EQUIPMENT that is provided by the MANUFACTURER;

c) the following information:

- the specification of the ME SYSTEM, including the use as intended by the MANUFACTURER and a listing of all of the items forming the ME SYSTEM;
- instructions for the installation, assembly and modification of the ME SYSTEM to ensure continued compliance with this standard;
- instructions for cleaning and, when applicable, disinfecting and sterilizing each item of equipment or equipment part forming part of the ME SYSTEM (see 11.6.6 and 11.6.7);
- additional safety measures that should be applied, during installation of the ME SYSTEM;
- which parts of the ME SYSTEM are suitable for use within the PATIENT ENVIRONMENT;
- additional measures that should be applied during preventive maintenance;
- if a MULTIPLE SOCKET-OUTLET is present and it is a separate item, a warning that it shall not be placed on the floor;
- a warning that an additional MULTIPLE SOCKET-OUTLET or extension cord shall not be connected to the ME SYSTEM;
- a warning to connect only items that have been specified as part of the ME SYSTEM or that have been specified as being compatible with the ME SYSTEM;
- the maximum permitted load for any MULTIPLE SOCKET-OUTLET(S) used with the ME SYSTEM;
- an instruction that MULTIPLE SOCKET-OUTLETS provided with the ME SYSTEM shall only be used for supplying power to equipment that is intended to form part of the ME SYSTEM;
- an explanation of the RISKS of connecting non-ME EQUIPMENT that has been supplied as a part of the ME SYSTEM directly to the wall outlet when the non-ME EQUIPMENT is intended to be supplied via a MULTIPLE SOCKET-OUTLET with a separating transformer;
- an explanation of the RISKS of connecting any equipment that has not been supplied as a part of the ME SYSTEM to the MULTIPLE SOCKET-OUTLET;
- the permissible environmental conditions of use of the ME SYSTEM including conditions for transport and storage; and
- instructions to the OPERATOR not to touch parts referred to in 16.4 and the PATIENT simultaneously.

d) advice to the RESPONSIBLE ORGANIZATION:

- to carry out all adjustment, cleaning, sterilization and disinfection PROCEDURES specified therein; and
- that the assembly of ME SYSTEMS and modifications during the actual service life require evaluation to the requirements of this standard.

Copyright International Electrotechnical Commission
Provided by IHS Markit under license with IEC
No reproduction or networking permitted without license from IHS
Not for Resale, 08/26/2020 19:12:41 MDT

Compliance is checked by inspection.

16.3 * Power supply

If ME EQUIPMENT is intended to receive its power from other equipment in an ME SYSTEM, the instructions for use shall specify the other equipment sufficiently to ensure compliance with the requirements of this standard (see 4.10.1, 5.5 f) and 7.9.2.3). See also Figure F.5.

If an ME SYSTEM:

– is intended to receive its power from an isolated power supply (IPS) or an uninterruptible power supply (UPS), and

– the ME SYSTEM can draw large transient currents when being switching on or off or when operating,

the MANUFACTURER shall restrict such transient currents to the allowed level according to the specification of the IPS or the UPS from which the ME SYSTEM is intended to be supplied.

If an IPS or UPS is not specified, the actual transient current level shall be disclosed in the technical description and any installation instructions.

Compliance is checked by inspection.

16.4 ENCLOSURES

Parts of non-ME EQUIPMENT in the PATIENT ENVIRONMENT that can be contacted by the OPERATOR during routine maintenance, calibration, etc. after removal of covers, connectors, etc., without the use of a TOOL shall operate at a voltage not exceeding the voltage specified in 8.4.2 c) supplied from a source that is separated from the SUPPLY MAINS by two MEANS OF OPERATOR PROTECTION (see 8.5.1).

Compliance is checked by inspection.

16.5 * SEPARATION DEVICES

When FUNCTIONAL CONNECTION between ME EQUIPMENT and other items of equipment of an ME SYSTEM or other systems can cause the allowable values of LEAKAGE CURRENT to be exceeded, then safety measures incorporating a SEPARATION DEVICE shall be applied.

The SEPARATION DEVICE shall have the dielectric strength, CREEPAGE DISTANCES and AIR CLEARANCES required for one MEANS OF OPERATOR PROTECTION appropriate for the highest voltage occurring across the SEPARATION DEVICE during a fault condition.

The WORKING VOLTAGE shall be the highest voltage across the SEPARATION DEVICE during a fault condition, but not less than the MAXIMUM MAINS VOLTAGE.

NOTE 1 For CLASS I equipment, potential differences can occur between the protective earth of the ME EQUIPMENT and the protective earth of other parts of the ME SYSTEM in the absence of a common protective earth.

NOTE 2 Situations that can require a SEPARATION DEVICE include FUNCTIONAL CONNECTIONS to an emergency calling system or a data processing system.

Compliance is checked by the tests in 8.8 and 8.9.

16.6 * LEAKAGE CURRENTS

16.6.1 TOUCH CURRENT

In NORMAL CONDITION, the TOUCH CURRENT from or between parts of the ME SYSTEM within the PATIENT ENVIRONMENT shall not exceed 100 μA.

In the event of the interruption of any non-PERMANENTLY INSTALLED PROTECTIVE EARTH CONDUCTOR, the TOUCH CURRENT from or between parts of an ME SYSTEM within the PATIENT ENVIRONMENT shall not exceed 500 μA.

NOTE For the purposes of this clause, the LEAKAGE CURRENT from accessible outer surfaces of equipment is also considered to be TOUCH CURRENT.

Copyright International Electrotechnical Commission
Provided by IHS Markit under license with IEC
No reproduction or networking permitted without license from IHS Not for Resale, 08/26/2020 19:12:41 MDT

16.6.2 EARTH LEAKAGE CURRENT of MULTIPLE SOCKET-OUTLET

If the ME SYSTEM or part of the ME SYSTEM is supplied from a MULTIPLE SOCKET-OUTLET, then the current in the PROTECTIVE EARTH CONDUCTOR of the MULTIPLE SOCKET-OUTLET shall not exceed 5 mA.

16.6.3 * PATIENT LEAKAGE CURRENT

The PATIENT LEAKAGE CURRENT and total PATIENT LEAKAGE CURRENT of an ME SYSTEM in NORMAL CONDITION shall not exceed the values specified for ME EQUIPMENT, as given in Table 3 and Table 4 (see also 8.7.3 and 16.1).

The total PATIENT LEAKAGE CURRENT may be measured at installation.

Compliance with the requirements of 16.6.1, 16.6.2 and 16.6.3 is checked by inspection and measurement using a measuring device as specified in 8.7.4.4.

16.6.4 Measurements

16.6.4.1 General conditions for ME SYSTEMS

a) *The TOUCH CURRENT, the PATIENT LEAKAGE CURRENT, the total PATIENT LEAKAGE CURRENT and the total EARTH LEAKAGE CURRENT ~~of any MULTIPLE SOCKET-OUTLET~~ are measured after the ME SYSTEM has been brought up to operating temperature as follows:*

The ME SYSTEM is operated:

– *For ME SYSTEMS intended for non-CONTINUOUS OPERATION;*

After operating in standby/quiescent mode until THERMAL STABILITY is reached, the ME SYSTEM is operated in NORMAL USE over consecutive cycles until THERMAL STABILITY is again achieved, or for seven hours, whichever is shorter. The "on" and "off" periods for each cycle are the RATED "on" and "off" periods;

– *For ME SYSTEMS intended for CONTINUOUS OPERATION;*

The ME SYSTEM is operated until THERMAL STABILITY is reached.

b) *The ME SYSTEM is connected to a supply with a voltage equal to the highest RATED MAINS VOLTAGE. When the characteristics of an ME SYSTEM can only be measured properly after it has been installed at the site of the RESPONSIBLE ORGANIZATION, prior to its clinical use, the ME SYSTEM is connected to the local SUPPLY MAINS.*

NOTE Where examination of the circuit arrangement and the arrangement of components and material of the ME SYSTEM shows no possibility of any HAZARD, the number of tests could be reduced.

16.6.4.2 Connection of the ME SYSTEM to the measuring supply circuit

a) The ME SYSTEM is tested after being assembled according to its ACCOMPANYING DOCUMENTS.

b) Measuring arrangement

If an isolating transformer is not used for LEAKAGE CURRENT measurements (e.g. when measuring LEAKAGE CURRENT for very high input power ME SYSTEMS), the reference earth of the measuring circuits is connected to the protective earth of the SUPPLY MAINS.

NOTE 1 It is recommended to position the measuring circuit as far as possible away from unscreened power supply leads and (unless specified otherwise in the following subclauses) to avoid placing the ME SYSTEM on or near a large earthed metal surface.

NOTE 2 However, APPLIED PARTS, including PATIENT cables (when present), should be placed on an insulating surface with a dielectric constant of approximately 1 (for example, expanded polystyrene) and approximately 200 mm above an earthed metal surface.

16.7 * Protection against MECHANICAL HAZARDS

If a MECHANICAL HAZARD exists, the ME SYSTEM shall comply with the applicable requirements of Clause 9.

Copyright International Electrotechnical Commission
Provided by IHS Markit under license with IEC
No reproduction or networking permitted without license from IHS Not for Resale, 08/26/2020 19:12:41 MDT

Compliance is checked by inspection or applicable tests.

16.8 Interruption of the power supply to parts of an ME SYSTEM

An ME SYSTEM shall be so designed that an interruption and restoration of the power to the ME SYSTEM as a whole, or any part of the ME SYSTEM, shall not result in ~~a HAZARDOUS SITUATION other than interruption of its intended function~~ the loss of BASIC SAFETY or ESSENTIAL PERFORMANCE.

Compliance is checked by interruption and restoration of relevant power connections one at a time and all connections simultaneously.

16.9 ME SYSTEM connections and wiring

16.9.1 Connection terminals and connectors

Design and construction of electrical, hydraulic, pneumatic and gas connection terminals and connectors shall be such that incorrect connection of accessible connectors, removable without the use of a TOOL, shall be prevented ~~where a HAZARDOUS SITUATION could otherwise exist.~~ unless it can be proven that no unacceptable RISK can result. In particular:

~~– Connectors shall comply with 15.4.1.~~

– Plugs for connection of PATIENT leads or PATIENT cables shall be so designed that they cannot be connected to other outlets of the same ME SYSTEM that are likely to be located in the PATIENT ENVIRONMENT unless it can be proved that no ~~HAZARDOUS SITUATION~~ unacceptable RISK can result.

Compliance is checked by inspection ~~and, if possible, by interchanging connectors~~ of PATIENT leads, PATIENT cables, connectors and outlets and, if interchange of the leads, cables, connectors or outlets is possible, by inspection of the RISK MANAGEMENT FILE.

– Medical gas connections on the ME SYSTEM for different gases to be operated in NORMAL USE shall not be interchangeable. See also ISO 407 [27].

Compliance is checked by inspection of all medical gas connections.

16.9.2 MAINS PARTS, components and layout

16.9.2.1 * MULTIPLE SOCKET-OUTLET

a) A MULTIPLE SOCKET-OUTLET shall:

- only allow connection by using a TOOL (see Figure I.1), or
- be of a type that cannot accept MAINS PLUGS of any of the kinds specified in IEC/TR 60083, or
- be supplied via a separating transformer (see 16.9.2.1 d) and Annex I).

Compliance is checked by inspection.

b) A MULTIPLE SOCKET-OUTLET:

- shall be marked with ~~safety sign~~ SAFETY SIGN ISO 7010-W001 (see Table D.2, ~~safety sign~~ SAFETY SIGN 2) such that it is visible in NORMAL USE; and:
  - shall be marked either individually or in combinations, with the maximum allowed continuous output in amperes or volt-amperes, or
  - shall be marked to indicate which equipment or equipment parts may be safely attached.
- may be a separate item or an integral part of ME EQUIPMENT or non-ME EQUIPMENT.

NOTE Each outlet does not have to be marked.

Compliance is checked by inspection.

Copyright International Electrotechnical Commission
Provided by IHS Markit under license with IEC
No reproduction or networking permitted without license from IHS Not for Resale, 08/26/2020 19:12:41 MDT

c) The MULTIPLE SOCKET-OUTLET shall comply with IEC 60884-1 and the following requirements.

- CREEPAGE DISTANCES and AIR CLEARANCES shall comply with 8.9.
- It shall be of CLASS I construction and the PROTECTIVE EARTH CONDUCTOR shall be connected to the earthing contacts in the socket-outlets.
- * PROTECTIVE EARTH TERMINALS and PROTECTIVE EARTH CONNECTIONS shall comply with 8.6~~, except that the total impedance of the protective earth path for an ME SYSTEM may be up to 400 mΩ, or higher if the conditions of 8.6.4 b) are satisfied~~.
- ENCLOSURES shall comply with 8.4.2 d).
- MAINS TERMINAL DEVICES and wiring shall comply with 8.11.4, if applicable.
- RATINGS of components shall not conflict with the conditions of use (see 4.8).
- Design and construction of electrical connection terminals and connectors of MULTIPLE SOCKET-OUTLETS shall prevent the incorrect connection of accessible connectors that are removable without the use of a TOOL.
- Requirements for the POWER SUPPLY CORD as described in 8.11.3 shall be fulfilled.

d) * If the MULTIPLE SOCKET-OUTLET is combined with a separating transformer, the following additional requirements apply.

- The separating transformer shall comply with ~~the requirements of IEC 61558-2-1,~~ this standard. Alternatively the separating transformer may comply with the requirements of IEC 61558-2-1, except that the requirements of maximum RATED output power of 1 kVA and degree of protection IPX4 do not apply.

  NOTE 1 As a separating transformer is not a MAINS SUPPLY TRANSFORMER, it does not require more than BASIC INSULATION.

  NOTE 2 Limitation of output power is not explained in IEC 61558-2-1 and the RATED output power is defined by the fuse in the installation and by the allowable power supply cable used. However, the characteristics of the separating transformer need to be carefully selected, taking into account the variations in the load current of the ME SYSTEM to ensure that the voltage supplied to the various items of the ME SYSTEM remains within the limits specified for the equipment.

  ~~NOTE 3 IEC 61558-2-1 should be used with the general standard IEC 61558-1.~~
- The separating transformer assembly shall be of CLASS I construction.
- The degree of protection against ingress of water as given in IEC 60529 shall be specified.
- The separating transformer assembly shall be marked according to the requirements of 7.2 and 7.3.
- The MULTIPLE SOCKET-OUTLET shall be permanently connected to the separating transformer or the socket-outlet of the separating transformer assembly shall be of a type that cannot accept MAINS PLUGS of any of the kinds identified in IEC/TR 60083 (see Figure I.1 and Figure I.2).

Compliance is checked by inspection and as described in the relevant subclauses of this standard.

16.9.2.2 * PROTECTIVE EARTH CONNECTIONS in ME SYSTEMS

For each part of an ME SYSTEM that shares a SUPPLY MAINS connection, the impedance and current carrying capability of the total protective earth path of an ME SYSTEM when tested as a unit shall comply with 8.6.4. Where the pathway of a fault current caused by a live part to a PROTECTIVE EARTHED part is protected only by the SUPPLY MAINS circuit over-current release (e.g. circuit breaker or fuse), the protective earth resistance of that pathway shall not exceed 200 mΩ.

Copyright International Electrotechnical Commission
Provided by IHS Markit under license with IEC
No reproduction or networking permitted without license from IHS
Not for Resale, 08/26/2020 19:12:41 MDT

Where the pathway of a fault current caused by a live part to a PROTECTIVE EARTHED part is protected by additional intermediate circuit breakers or fuses with current ratings 13 A or lower, then compliance with 8.6.4 b) and 8.7.2, first dash, is achieved and the protective earth resistance to that part of the fault pathway may exceed 200 mΩ but shall be less than 400 mΩ.

PROTECTIVE EARTH CONNECTIONS shall be made so that the removal of any single item of equipment in the ME SYSTEM will not interrupt the protective earthing of any other part of the ME SYSTEM, without at the same time disconnecting the electrical supply to that part.

Additional PROTECTIVE EARTH CONDUCTORS shall only be detachable by use of a TOOL.

Compliance is checked by inspection.

16.9.2.3 Protection of conductors

Conductors that connect different items of equipment within an ME SYSTEM shall be protected against mechanical damage.

Compliance is checked by inspection.

17 * Electromagnetic compatibility of ME EQUIPMENT and ME SYSTEMS

~~The MANUFACTURER shall address In the RISK MANAGEMENT PROCESS the RISKS associated with:~~

- ~~the electromagnetic phenomena existing at the locations where the ME EQUIPMENT or ME SYSTEM is intended to be used as indicated in the ACCOMPANYING DOCUMENTS; and~~
- ~~the introduction by the ME EQUIPMENT or ME SYSTEM of electromagnetic phenomena into the environment that might degrade the performance of other devices, electrical equipment and systems.~~

~~See IEC 60601-1-2 and also see 1.3.~~

~~*Compliance is checked by inspection of the RISK MANAGEMENT FILE.*~~

The MANUFACTURER shall address the RISK(S) associated with ELECTROMAGNETIC DISTURBANCES.

Compliance is checked as specified in IEC 60601-1-2:2014 and IEC 60601-1-2:2014/AMD1:2020.

--`,,`````,,`,`,,`,,,,,,,,,`-`-`,,`,,`,`,,`---

Copyright International Electrotechnical Commission
Provided by IHS Markit under license with IEC
No reproduction or networking permitted without license from IHS
Not for Resale, 08/26/2020 19:12:41 MDT

Annex A
(informative)

General guidance and rationale

A.1 General guidance

The requirements for ME EQUIPMENT and ME SYSTEMS differ from those for other kinds of electrical equipment because of the particular relationship of ME EQUIPMENT or ME SYSTEM to the PATIENT, the OPERATOR and the surroundings. The following aspects play an important role in this relationship:

a) the inability of the PATIENT or OPERATOR to detect the presence of certain HAZARDS, such as ionizing and non-ionizing radiation;

b) absence of normal reactions of the PATIENT who can be ill, unconscious, anaesthetized, immobilized, etc.;

c) absence of normal protection to currents provided by the PATIENT'S skin, if this is penetrated or treated to obtain a low skin-resistance;

d) support or replacement of vital body functions, which depends on the reliability of ME EQUIPMENT or ME SYSTEM;

e) the simultaneous connection to the PATIENT of more than one piece of ME EQUIPMENT;

f) combination of high-power ME EQUIPMENT and sensitive low-signal ME EQUIPMENT often in ad hoc combinations;

g) the application of electrical circuits directly to the human body, either through contacts to the skin or through the insertion of probes into internal organs;

h) conditions, particularly in operating theatres, that can present a combination of humidity, moisture or HAZARDS of fire or explosion ~~HAZARDS~~ caused by air, oxygen or nitrous oxide.

When ME EQUIPMENT is combined with another electrical equipment to form an ME SYSTEM, additional requirements apply. These are given in Clause 16. In some instances, reference to other parts of this standard is made. If a clause or subclause is specifically intended to be applicable to ME EQUIPMENT only, the title and content of that clause or subclause will say so. If that is not the case, the clause or subclause could be applicable to ME SYSTEMS as well as to ME EQUIPMENT.

A.2 Safety of ME EQUIPMENT and ME SYSTEMS

BASIC SAFETY and ESSENTIAL PERFORMANCE of ME EQUIPMENT and ME SYSTEMS, as described in IEC/TR 60513 [12], are part of the total safety situation, comprising safety of ME EQUIPMENT, safety of the installation to which the ME EQUIPMENT or ME SYSTEM is connected and safety of application.

BASIC SAFETY and ESSENTIAL PERFORMANCE of ME EQUIPMENT and ME SYSTEMS are required for NORMAL USE and for reasonably foreseeable misuse and in NORMAL CONDITION and SINGLE FAULT CONDITIONS. Reliability of functioning is regarded as a safety aspect for life-supporting ME EQUIPMENT and where interruption of an examination or treatment is considered as a ~~HAZARD~~ HAZARDOUS SITUATION for the PATIENT.

Adequate construction, lay-out and ACCOMPANYING DOCUMENTS that serve to prevent use errors are regarded as safety aspects.

Safety precautions are considered acceptable if they provide adequate protection without an undesirable restriction of normal function.

Copyright International Electrotechnical Commission
Provided by IHS Markit under license with IEC
No reproduction or networking permitted without license from IHS
Not for Resale, 08/26/2020 19:12:41 MDT

Generally, it is presumed that ME EQUIPMENT and ME SYSTEMS are operated under the jurisdiction of qualified or licensed persons and that the OPERATOR has the skill required for a particular medical application and acts according to the instructions for use.

The total safety of ME EQUIPMENT can consist of:

– inherent safety by design;
– protective measures incorporated into the ME EQUIPMENT or additional protective measures, such as the use of shields or protective clothing; and
– information for safety, such as restrictions in the instructions for use concerning transport, mounting or positioning, connection, putting into service, operation and the position of the OPERATOR and his/her assistants in relation to the ME EQUIPMENT during use.

A.3 Guidance to the third edition

In this edition, a number of clauses and subclauses from the second edition have been deleted, e.g. when the clause or subclause was indicated as “Not used.” However, those clauses or subclauses from the second edition that stated “No general requirement” have been retained so that particular or collateral standards can refer to them. The statement, “No general requirement”, has been replaced with a reference to the RISK MANAGEMENT PROCESS because the “general requirement” is that, in the absence of a particular or collateral standard, these issues are dealt with through the application of RISK MANAGEMENT.

While preparing the third edition, basic safety standards and ISO/IEC guides have been taken into consideration to the extent possible consistent with the particular relationship of ME EQUIPMENT or ME SYSTEM to the PATIENT, the OPERATOR and the surroundings.

The format of the third edition has been aligned with the basic requirements of Part 2 of the ISO/IEC Directives. All the sections except Section 1 of the second edition have been converted into major clauses. This change was implemented because sections are no longer allowed under the drafting rules and the new numbering system will allow future changes to modify a clause without affecting the number of other parts of the standard.

The normative references have been moved from Appendix L of the second edition to Clause 2. Informative references are listed in the Bibliography.

The definitions in Clause 3 have been rearranged into a single alphabetical listing as organizing the definitions by category was becoming increasingly difficult and the result less intuitive. The index has been expanded to identify each page where a term is used in the body of the standard. A number of new defined terms have been introduced in support of new or expanded requirements.

A general requirement for a RISK MANAGEMENT PROCESS has been introduced in 4.2.

Clause 8 has been extensively restructured to bring together in one clause the requirements relating to electrical safety. The requirements in Clause 8 have been reviewed against the safety requirements for information technology (IT) equipment in IEC 60950-1 and harmonized where appropriate given the particular relationship of ME EQUIPMENT to the PATIENT, the OPERATOR and the surroundings.

Clause 9 on protection against MECHANICAL HAZARDS has been substantially revised to deal with a wide range of the HAZARDS that ME EQUIPMENT could pose to the OPERATOR or PATIENT. Requirements relating to the mechanical strength of the ME EQUIPMENT when subjected to the stresses caused by pushing, impact, dropping, and rough handling are in 15.3.

The standard now deals with USABILITY in 12.2 as opposed to “user or human errors.”

Section six of the second edition on protection against the HAZARDS of ignition of flammable anaesthetic mixtures has been moved to a normative annex. While this annex was originally intended to be informative because the use of such anaesthetics is rare, comments from

Copyright International Electrotechnical Commission
Provided by IHS Markit under license with IEC
No reproduction or networking permitted without license from IHS Not for Resale, 08/26/2020 19:12:41 MDT

National Committees indicated that some MANUFACTURERS might still want to offer ME EQUIPMENT for such applications.

The surface temperature limit in 11.1.2.2 for APPLIED PARTS that are in contact with the PATIENT for 10 min or more has been increased from 41 °C to 43 °C. However, the MANUFACTURER is to disclose in the ACCOMPANYING DOCUMENTS if the surface temperature of an APPLIED PART exceeds 41 °C.

The requirements of IEC 60601-1-4 [14] for PROGRAMMABLE ELECTRICAL MEDICAL SYSTEMS, as referred to in 52.1 of the second edition, have been incorporated into the body of this standard in a new Clause 14.

The requirements of IEC 60601-1-1 [13] for ME SYSTEMS have been incorporated into the body of this standard in a new Clause 16.

A.4 Rationale for particular clauses and subclauses

The following are rationales for specific clauses and subclause in this standard, with clause and subclause numbers parallel to those in the body of the document.

Subclause 1.1 – Scope

The scope of this standard is established by the reference to the definitions of ME EQUIPMENT and ME SYSTEMS. This is to clearly define the scope of this standard as compared with requirements for other types of electrical equipment.

Laboratory equipment within the scope of IEC 61010-1 [22] is not covered by this standard except when a MANUFACTURER incorporates such laboratory equipment into an ME SYSTEM.

This standard does not apply to active implantable medical devices covered by the ISO 14708-1 [31] except where the ISO 14708-1 requires compliance with IEC 60601-1.

This standard does not apply to any other electrical equipment unless it falls under the definition of ME EQUIPMENT or ME SYSTEMS.

Subclause 1.3 – Collateral standards

Collateral standards are a vehicle developed by Technical Committee 62 as a way of extending the general standard. Collateral standards fall into two categories:

– standards that address additional BASIC SAFETY and ESSENTIAL PERFORMANCE requirements that are common to a subgroup of ME EQUIPMENT. For example, Subcommittee 62B developed IEC 60601-1-3 to provide general requirements for protection against ionizing radiation in medical diagnostic X-ray equipment in order that the dose equivalent to the PATIENT, the OPERATOR and other staff can be kept as low as reasonably achievable; or

– standards that address additional BASIC SAFETY or ESSENTIAL PERFORMANCE requirements that deal with characteristic of ME EQUIPMENT or ME SYSTEMS that are not fully covered by the general standard. ~~At the time of publication, three collateral standards in this category have been published by Subcommittee 62A: EMC (IEC 60601-1-2), Usability (IEC 60601-1-6) and Alarm systems (IEC 60601-1-8).~~

~~The editions of IEC 60601-1-2, IEC 60601-1-3, IEC 60601-1-6 and IEC 60601-1-8 existing at the time of publication of this third edition of the general standard were all developed in relation to the second edition of the general standard (IEC 60601-1:1988). It is intended that revised editions of these collateral standards, relating specifically to this third edition, will be developed and published as soon as possible. As stated in 1.3, these will become normative at the date of their publication and shall apply together with this standard.~~

~~Until such new editions of these collateral standards are published, users of this standard should apply the existing editions as far as possible when they are relevant to the ME EQUIPMENT or ME SYSTEM concerned. However some requirements of these collateral standards might not be compatible with this standard.~~

--`,,```,,,,````-`-`,,`,,`,`,,`---

Copyright International Electrotechnical Commission
Provided by IHS Markit under license with IEC
No reproduction or networking permitted without license from IHS
Not for Resale, 08/26/2020 19:12:41 MDT

The requirements from two of the collateral standards developed for the second edition of IEC 60601-1 have been incorporated into the body of this standard. They are:

– IEC 60601-1-1:2000, *Medical electrical equipment – General requirements for safety – Collateral standard: Safety requirements for medical electrical systems*

– IEC 60601-1-4:1996, *Medical electrical equipment – Part 1: General requirements for safety – 4. Collateral standard: Programmable electrical medical systems* and its Amendment 1 (1999)[21)].

While both standards will remain active until all the particular standards based on the second edition of IEC 60601-1 have been aligned with this standard, they are not applicable when applying this standard.

Additional collateral standards can be published from time to time as needs are identified. While those standards will not be mentioned in this standard, they still establish general requirements that need to be considered when applicable. Readers are encouraged to consult the registers of currently valid International Standards maintained by their national standards body to see what applicable collateral standards have been published.

Subclause 1.4 – Particular standards

A particular standard can specify:

– clauses or subclauses of this standard that apply without amendment;

– clauses or subclauses (or parts of them) of this standard that do not apply;

– clauses or subclauses (or parts of them) of this standard that are replaced by clauses or subclauses in the particular standard; or

– additional clauses or subclauses.

A particular standard can contain:

a) requirements that result in an increase of BASIC SAFETY or ESSENTIAL PERFORMANCE;

b) requirements that can be less stringent than the requirements in this standard, if the latter cannot be maintained because of, for example, the power output of ME EQUIPMENT;

c) requirements concerning performance, reliability, interfaces, etc.;

d) accuracy of working data; or

e) extension and limitation of environmental conditions.

Clause 2 – Normative references

This clause provides a list of the documents cited in other normative parts of this standard in such a way as to make them indispensable for the application of the document. However, conformance with the documents in this list is required only to the extent that they are referenced in a normative requirement in this standard. For example, if a reference is made to a specific clause, subclause, table or figure, then the user of this standard is only required to conform to the requirements in that clause, subclause, table or figure in order to satisfy the requirement in this standard.

Undated references are made only to a complete document or to a major part thereof and only if it is accepted that it will be possible to use all future changes of the referenced document for the purposes of this standard. For example, an undated reference is made to IEC 60529 because it is intended that the MANUFACTURER will always use the latest edition of that standard when assigning IP Codes to ENCLOSURES.

Undated references are understood to include all amendments to and revisions of the referenced document.

21) There exists a consolidated edition 1.1 (2000) including IEC 60601-1-4 (1996) and its Amendment 1 (1999).

--`,,```,,,,````-`-`,,`,,`,`,,`---

Copyright International Electrotechnical Commission
Provided by IHS Markit under license with IEC
No reproduction or networking permitted without license from IHS Not for Resale, 08/26/2020 19:12:41 MDT

Dated references are made when the requirements of a particular edition are to be used to satisfy a requirement of this standard. Subsequent amendments to, or revisions of, dated references will need to be incorporated by amendment of this standard. ~~For example, a dated reference is made to IEC 60825-1 because relevant parts of that standard are applied to light emitting diodes (LEDs) and IEC/TC 76 was in the early stages of developing a third edition of IEC 60825-1 and was considering removing the requirements for LEDs.~~

References to specific clauses, subclauses, tables and figures of another document are always dated.

Clause 3 – Terminology and definitions

This clause contains definitions for terms that are necessary for the understanding of the requirements in this standard. Many of these terms are inherited from the second edition. However, a number of terms have been added during the course of developing new or modified requirements. Where possible, existing definitions in other standards have been copied or adapted.

Except when used to support other defined terms, a definition is only provided if the term is used more than once in the text of the standard.

Defined terms are printed in SMALL CAPITALS to assist the reader in identifying them in the body of the standard. When normal case is used, the words have their normal English meaning. The committee made an effort to avoid using the same word both as a defined term and in its normal English meaning. At times this has not been possible. For example, the word “procedure” is used as a defined term in Start-up PROCEDURE, specifically meaning a “specific way to perform an activity” of starting up the ME EQUIPMENT or ME SYSTEM. It is also used in the definition of PATIENT according to its general English meaning, i.e. “Living being (person or animal) undergoing a medical, surgical or dental procedure.”

Subclause 3.8 – APPLIED PART

Parts that contact PATIENTS can present greater HAZARDS than other parts of the ENCLOSURE, and these APPLIED PARTS are therefore subject to more stringent requirements, for example, for temperature limits and (according to classification B/BF/CF) for LEAKAGE CURRENT.

NOTE Some other ACCESSIBLE PARTS of the ENCLOSURES of ME EQUIPMENT are subject to tests that are more demanding than those for ENCLOSURES of other kinds of equipment, because the PATIENT can touch them, or the OPERATOR can touch them and the PATIENT simultaneously.

In order to determine which requirements apply, it is necessary to distinguish between APPLIED PARTS and parts that are simply considered as the ENCLOSURE.

Thus, typically:

– an infrared therapy lamp does not have an APPLIED PART because it does not need to be brought into direct contact with the PATIENT;

– the only part of an X-ray table that is an APPLIED PART is the top on which the PATIENT lies;

– likewise, in an MRI scanner, the only APPLIED PART is the table supporting the PATIENT.

However, a part that unintentionally comes into contact with an unconscious, anaesthetized or incapacitated PATIENT can present the same RISKS as an APPLIED PART that necessarily has to contact the PATIENT. On the other hand, a part that an active PATIENT can reach out and touch might present no more RISK to that PATIENT than it presents to an OPERATOR.

The definition in the first and second editions of this standard failed to address this problem. The second amendment to the second edition extended the definition to include parts that can be brought into contact with the PATIENT, but the new definition continued to cause difficulties.

In this edition, subclause 4.6 requires the RISK MANAGEMENT PROCESS to identify which parts, other than APPLIED PARTS, are subject to the same requirements as APPLIED PARTS. These can include parts of non-ME EQUIPMENT in an ME SYSTEM.

Copyright International Electrotechnical Commission
Provided by IHS Markit under license with IEC
No reproduction or networking permitted without license from IHS Not for Resale, 08/26/2020 19:12:41 MDT

Particular standards should specifically identify the APPLIED PART(S) in particular types of ME EQUIPMENT.

In order to assess which parts are APPLIED PARTS and what are the PATIENT CONNECTIONS, the following PROCESS is employed in the order shown.

a) Determine whether the ME EQUIPMENT has an APPLIED PART, and if it has, identify the extent of the APPLIED PART (these decisions being based on non-electrical considerations).

b) If there is no APPLIED PART, there are no PATIENT CONNECTION(S).

c) If there is an APPLIED PART, there can be one or more PATIENT CONNECTION(S). Even if the APPLIED PART has no accessible conductive parts, foil applied in accordance with 8.7.4.7 is regarded as one PATIENT CONNECTION.

d) Where a conductive part of the APPLIED PART is not in direct contact with the PATIENT, but is not separated and current can flow through such a part to or from the PATIENT, it is to be treated as an individual PATIENT CONNECTION.

NOTE Relevant separation requirements are those that relate to MEANS OF PATIENT PROTECTION.

An APPLIED PART can include one or more functions. Each function can include one or more PATIENT CONNECTIONS. A PATIENT CONNECTION can be an electrode that is intended to carry current; or the electrical connection can be incidental to the purpose, for example with an intra-vascular fluid line or a PATIENT support.

See also the rationale for 3.78.

Figure A.1 to Figure A.7 (inclusive) provide examples of the way in which APPLIED PARTS and PATIENT CONNECTIONS are identified in order to apply the requirements for PATIENT LEAKAGE CURRENT and PATIENT AUXILIARY CURRENT in various ME EQUIPMENT and ME SYSTEMS.

Figure A.1 and Figure A.2 shows an ECG monitor that includes the ECG monitor, the PATIENT cable, PATIENT leads and the ECG electrodes. In Figure A.1 and Figure A.2:

– The APPLIED PART includes the electrodes and those parts of the PATIENT leads or PATIENT cable that need to physically contact the PATIENT in NORMAL USE.
– Application of RISK MANAGEMENT might identify other parts of the PATIENT lead or PATIENT cable that have to be treated as APPLIED PARTS because of the probability they will come in contact with the PATIENT.
– The PATIENT CONNECTIONS consist of the ECG electrodes, which are all part of the same function of the APPLIED PART.

Copyright International Electrotechnical Commission
Provided by IHS Markit under license with IEC
No reproduction or networking permitted without license from IHS Not for Resale, 08/26/2020 19:12:41 MDT

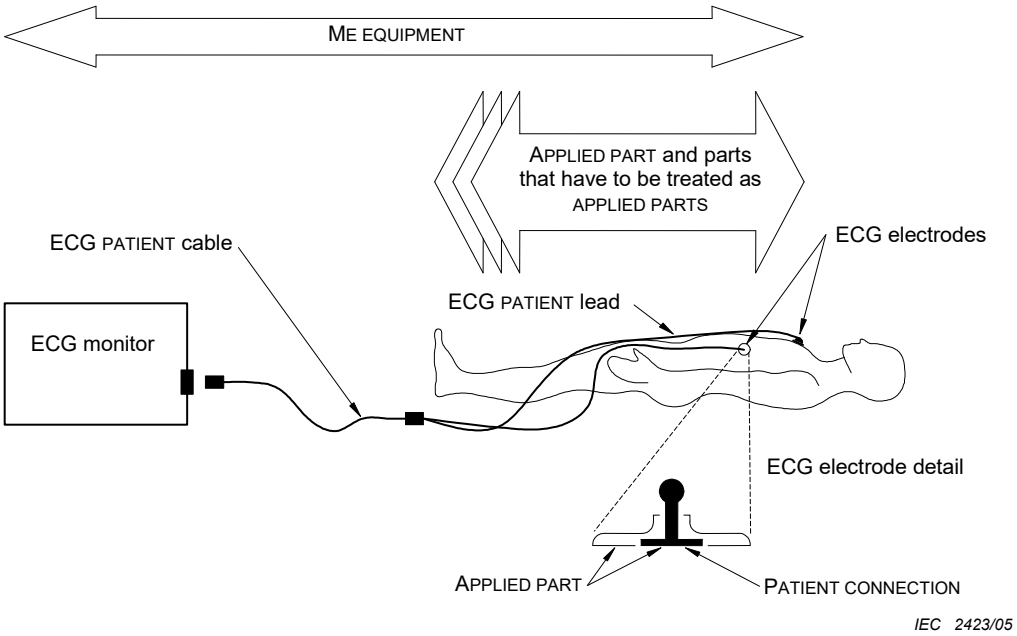

Figure A.1 – Identification of ME EQUIPMENT, APPLIED PARTS and PATIENT CONNECTIONS in an ECG monitor

Figure A.2 shows the required F-TYPE APPLIED PART insulation. The parts within the dotted line are the PATIENT circuit.

In Figure A.2, the required APPLIED PART insulation is:

– one MEANS OF PATIENT PROTECTION between earth and parts within the dotted line based on the MAINS VOLTAGE;

– two MEANS OF PATIENT PROTECTION between earth and parts within the dotted line based on the voltage carried by these parts; and

– two MEANS OF PATIENT PROTECTION between live parts (including mains) and the parts within the dotted line.

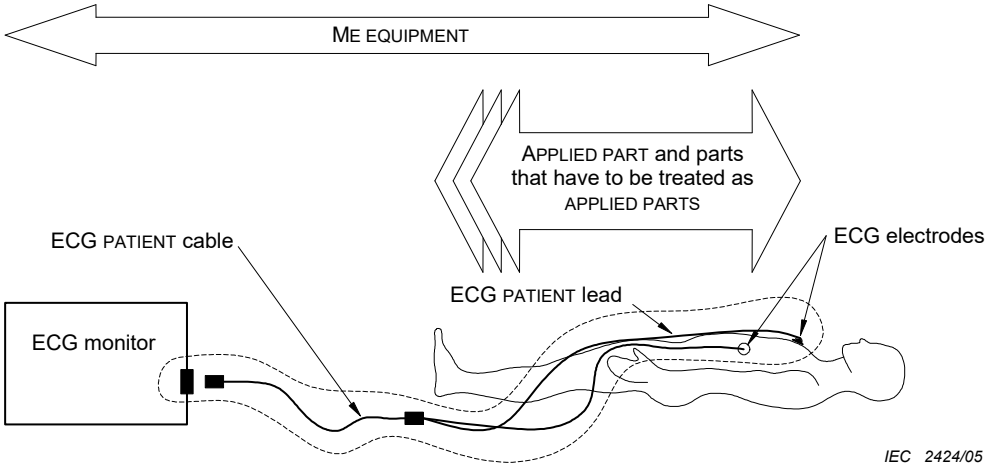

Figure A.2 – Example of the insulation of an F-TYPE APPLIED PART with the insulation incorporated in the ME EQUIPMENT

Figure A.3 shows an F-TYPE APPLIED PART with the insulation incorporated in a transducer. The parts within the dotted line are the PATIENT circuit. There are parts outside the dotted line that

Copyright International Electrotechnical Commission
Provided by IHS Markit under license with IEC
No reproduction or networking permitted without license from IHS
Not for Resale, 08/26/2020 19:12:41 MDT

are subject to the requirements for APPLIED PARTS as determined through the RISK MANAGEMENT PROCESS.

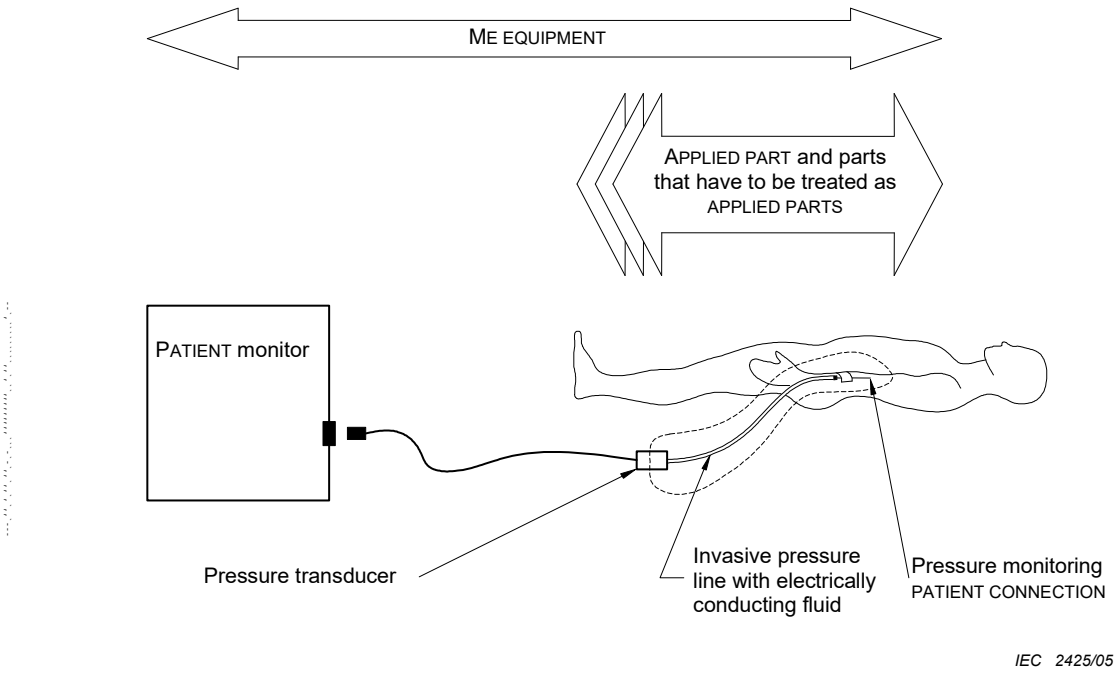

Figure A.3 – Identification of ME EQUIPMENT, APPLIED PARTS and PATIENT CONNECTIONS in a PATIENT monitor with invasive pressure monitoring facility

Figure A.4 shows a PATIENT monitor with ECG and invasive pressure monitoring facilities. In this example:

– The ME EQUIPMENT includes the ECG monitor; the ECG PATIENT cable, the PATIENT leads and ~~its~~ their electrodes; and the pressure transducer and its fluid filled line.

– The APPLIED PART(s) include the ECG electrodes and those parts of the PATIENT cable and PATIENT leads that need to physically contact the PATIENT in NORMAL USE; and the fluid filled pressure monitoring line.

– Application of RISK MANAGEMENT might identify other parts of the ECG PATIENT cable, the PATIENT leads or the pressure transducer that have to be treated as APPLIED PARTS because of the probability they will come in contact with the PATIENT.

– The ECG PATIENT CONNECTIONS consist of the ECG electrodes.

– The pressure monitoring PATIENT CONNECTION consists of the electrically conducting fluid in the pressure line. For the measurement of PATIENT LEAKAGE CURRENT and PATIENT AUXILIARY CURRENT, an electrode is placed in the electrically conducting fluid and treated as a single PATIENT CONNECTION.

– If the PATIENT CONNECTIONS associated with the ECG function are not electrically separated from the PATIENT CONNECTION associated with the pressure monitoring function, these are treated as two functions of the same APPLIED PART.

– If the PATIENT CONNECTIONS associated with the ECG function are electrically separated from the PATIENT CONNECTION associated with the pressure monitoring function, these are treated as separate APPLIED PARTS.

Copyright International Electrotechnical Commission
Provided by IHS Markit under license with IEC
No reproduction or networking permitted without license from IHS
Not for Resale, 08/26/2020 19:12:41 MDT

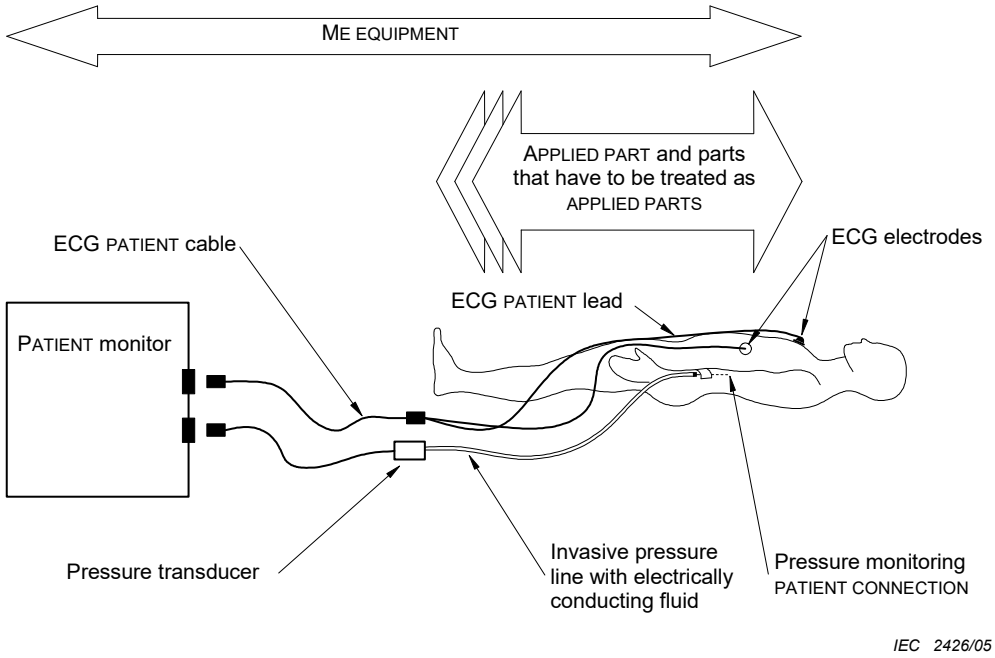

Figure A.4 – Identification of ME EQUIPMENT, APPLIED PARTS and PATIENT CONNECTIONS in a multifunction PATIENT monitor with invasive pressure monitoring facilities

Figure A.5 shows an X-ray ME SYSTEM in which:

– The ME SYSTEM includes the X-ray ~~tube~~ source assembly, the X-ray table and the wall stand, which are all items of ME EQUIPMENT. Other parts of the ME SYSTEM such as the X-ray generator and OPERATOR console are not shown.

– The APPLIED PART(s) include the top of the table and the front of the wall stand, as these parts need to physically contact the PATIENT in NORMAL USE.

– The application of RISK MANAGEMENT might identify some parts of the tube assembly and some other parts of the table and the wall stand ~~have~~ as having to be treated as APPLIED PARTS because of the probability they will come in contact with the PATIENT.

– The PATIENT CONNECTIONS consist of the conductive parts of these APPLIED PARTS that electrically contact the PATIENT.

– The MANUFACTURER can specify that the table and the wall stand are different functions of the same APPLIED PART.

– Alternatively, the MANUFACTURER can specify that the table and the wall stand are different APPLIED PARTS.

Copyright International Electrotechnical Commission
Provided by IHS Markit under license with IEC
No reproduction or networking permitted without license from IHS
Not for Resale, 08/26/2020 19:12:41 MDT

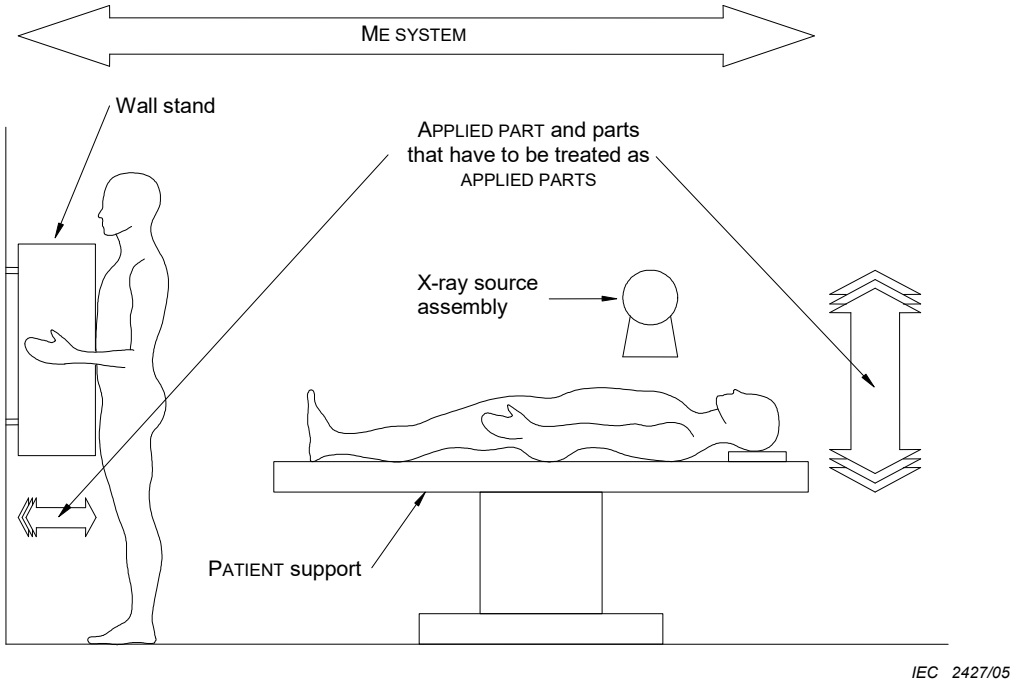

Figure A.5 – Identification of APPLIED PARTS and PATIENT CONNECTIONS in an X-ray ME SYSTEM

Figure A.6 shows a transcutaneous electronic nerve stimulator (TENS) that is intended to be worn on the PATIENT's belt and connected to electrodes applied to the PATIENT's upper arm. In this case:

– The ME EQUIPMENT includes the TENS stimulator, the electrode cable and the electrodes.

– The APPLIED PART includes the electrodes and those parts of the electrode leads that physically need to contact the PATIENT in NORMAL USE.

– The application of RISK MANAGEMENT might identify that the case of the stimulator and its belt clip also have to be treated as APPLIED PARTS because of the probability they will come in contact with the PATIENT.

– The PATIENT CONNECTIONS consist of the electrodes, which are all part of the same function of this APPLIED PART.

Copyright International Electrotechnical Commission
Provided by IHS Markit under license with IEC
No reproduction or networking permitted without license from IHS
Not for Resale, 08/26/2020 19:12:41 MDT

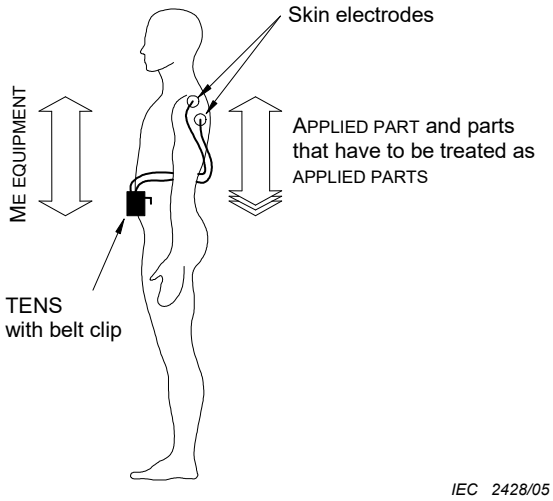

Figure A.6 – Identification of ME EQUIPMENT, APPLIED PARTS and PATIENT CONNECTIONS in a transcutaneous electronic nerve stimulator (TENS) intended to be worn on the PATIENT'S belt and connected to electrodes applied to the PATIENT'S upper arm

Figure A.7 shows an ECG processing ME EQUIPMENT / ME SYSTEM in which:

– The ME SYSTEM includes the ECG module, PATIENT cable, PATIENT leads and electrodes, and the personal computer and any of its ACCESSORIES (not shown).

– The MANUFACTURER can choose to specify one of the following situations:

  ~~18~~ • The ECG module and its PATIENT cable, PATIENT leads and electrodes are an item of ME EQUIPMENT; and the personal computer is not an item of ME EQUIPMENT. This would be an ME SYSTEM.

  ~~19~~ • The ECG module and its PATIENT cable, PATIENT leads and electrodes are one item of ME EQUIPMENT; and the personal computer is a separate item of ME EQUIPMENT. This would also be an ME SYSTEM.

  ~~20~~ • The ECG module and its PATIENT cable, PATIENT leads and electrodes together with the personal computer is a single item of ME EQUIPMENT and not an ME SYSTEM.

– The APPLIED PART includes the electrodes and those parts of the PATIENT cable or, PATIENT leads that need to physically contact the PATIENT in NORMAL USE.

– Application of RISK MANAGEMENT might identify other parts of the PATIENT cable or, PATIENT leads have to be treated as APPLIED PARTS because of the probability they will come in contact with the PATIENT.

– The PATIENT CONNECTIONS consist of the ECG electrodes, which are all part of the same function of the APPLIED PART.

Copyright International Electrotechnical Commission
Provided by IHS Markit under license with IEC
No reproduction or networking permitted without license from IHS
Not for Resale, 08/26/2020 19:12:41 MDT

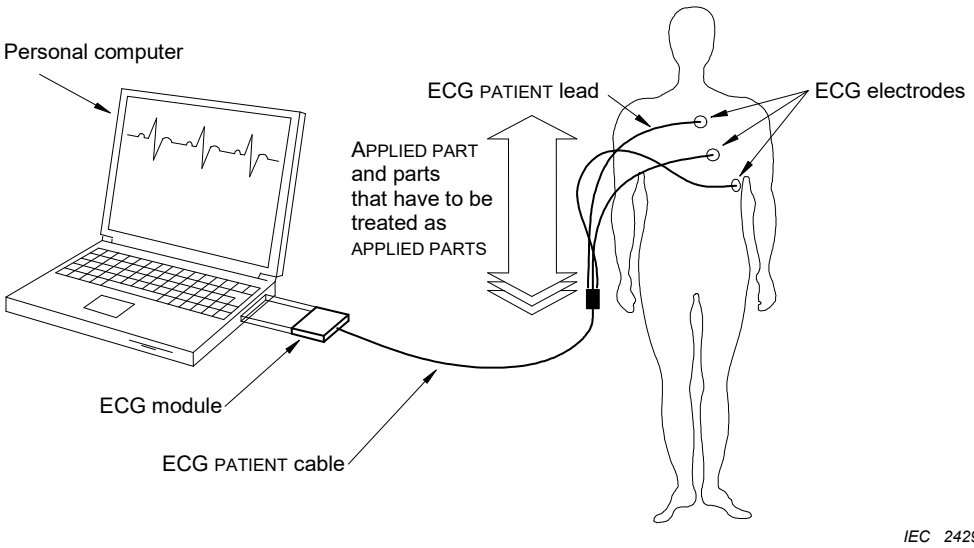

Figure A.7 – Identification of ME EQUIPMENT or ME SYSTEM, APPLIED PARTS and PATIENT CONNECTIONS in a personal computer with an ECG module

Subclause 4.6 would likely not apply to ACCESSIBLE PARTS of ME EQUIPMENT which are positioned according their INTENDED USE in such a way that the PATIENT could touch them only by a deliberate movement. This is based on the assumption that a PATIENT could react to a negative stimulus. Further, such PATIENTS are likely to have contact with non-ME EQUIPMENT such as bedside lights, personal computers, radios, etc.

Subclause 3.9 – BASIC INSULATION

This definition does not include insulation used exclusively for functional purposes.

Subclause 3.10 – BASIC SAFETY

BASIC SAFETY relates to a device not ~~harming the PATIENT~~ resulting in HARM incidental to its operation.

BASIC SAFETY is often a passive form of protection (such as radiation shielding or electrical grounding).

ESSENTIAL PERFORMANCE generally relates to ME EQUIPMENT or ME SYSTERMS operating as intended without creating a HAZARD. A failure of ESSENTIAL PERFORMANCE can be either a lack of performance (such as life supporting performance) or incorrect performance (such as delivering an incorrect dose to the PATIENT).

In general, BASIC SAFETY relates to product properties that are not device specific and ESSENTIAL PERFORMANCE relates to a class of products (such as a defibrillators being able to deliver the correct electrical shock).

While the terms BASIC SAFETY and ESSENTIAL PERFORMANCE are generally considered to be mutually exclusive, there are some HAZARDS that may relate to both BASIC SAFETY and ESSENTIAL PERFORMANCE concurrently.

Subclause 3.15 – CLEARLY LEGIBLE

Vision or visual acuity can be tested by reading a Snellen eye chart at a distance of 6 m. Near vision can be tested using a Jaeger test card. By examining a large number of people, doctors have decided what a “normal” human being should be able to see at various distances. That is the description of normal vision.

Copyright International Electrotechnical Commission
Provided by IHS Markit under license with IEC
No reproduction or networking permitted without license from IHS
Not for Resale, 08/26/2020 19:12:41 MDT

Subclause 3.17 – COMPONENT WITH HIGH-INTEGRITY CHARACTERISITCS

The concept of high-integrity refers only to specific characteristics of the component. These characteristics are relied upon to ensure safety of the product. Such a COMPONENT WITH HIGH-INTEGRITY CHARACTERISTICS should be identified in the ACCOMPANYING DOCUMENTS by the MANUFACTURER (e.g. for maintenance). See also the rationale for 4.9.

Subclause 3.18 – CONTINUOUS OPERATION

While the terms CONTINUOUS OPERATION or non-CONTINUOUS OPERATION are used with regard to the ME EQUIPMENT, parts of the ME EQUIPMENT can be RATED differently. For example, an electrosurgical generator might be RATED for CONTINUOUS OPERATION while the APPLIED PART is RATED for non-CONTINUOUS OPERATION.

Subclause 3.20 – DEFIBRILLATION-PROOF APPLIED PART

A DEFIBRILLATION-PROOF APPLIED PART is protected only against discharges of defibrillators complying with IEC 60601-2-4 [15]. Higher voltage defibrillators could damage DEFIBRILLATION-PROOF APPLIED PARTS.

Subclause 3.21 – DETACHABLE POWER SUPPLY CORD

Cord sets are covered by IEC 60320-1.

Subclause 3.22 – DIRECT CARDIAC APPLICATION

A distinction is made between use of APPLIED PARTS that might come in direct contact with the PATIENT'S heart and all other circumstances of contact with the PATIENT. Ventricular fibrillation can be caused by a much smaller current flowing through a small contact area where a wire or catheter makes direct contact with the heart than a current flowing through any other point of contact on or in the PATIENT'S body.

Subclause 3.23 – DOUBLE INSULATION

BASIC INSULATION and SUPPLEMENTARY INSULATION can, if required, be tested separately. Where multiple layers of insulation cannot be tested separately, the insulation system is considered as REINFORCED INSULATION.

Subclause 3.24 – DUTY CYCLE

The terms "on time" and "off time" are considered to include "bursts" of operation and deactivation as well as CONTINUOUS OPERATION.

Subclause 3.26 – ENCLOSURE

The ENCLOSURE of ME EQUIPMENT or ME EQUIPMENT parts includes all ACCESSIBLE PARTS, knobs, grips, cables, connectors and the like. This includes any ACCESSIBLE PARTS of external connections between other separate parts.

Subclause 3.27 – ESSENTIAL PERFORAMNCE

It has long been recognized that ME EQUIPMENT or an ME SYSTEM that does not perform properly could result in unacceptable RISK for PATIENTS, OPERATORS, or others. ~~All features or functions that must perform properly to prevent HARM to the PATIENT, OPERATOR or others are important, but not every feature or function of ME EQUIPMENT is ESSENTIAL PERFORMANCE. When a failure to perform would result in unacceptable RISK for the PATIENT, OPERATOR or others, then those features or functions are, for the purposes of this standard, seen as ESSENTIAL PERFORMANCE.~~ Hence the concept of "safety" has been broadened from the BASIC SAFETY considerations in the first and second editions of this standard to include ESSENTIAL PERFORMANCE matters.

~~Assessment of this RISK is made on the assumption that the performance aspect in question has been lost or degraded, and takes account of the probability that HARM would then occur~~

Copyright International Electrotechnical Commission
Provided by IHS Markit under license with IEC
No reproduction or networking permitted without license from IHS Not for Resale, 08/26/2020 19:12:41 MDT

~~(which in some instances could be 100 %) and the SEVERITY of that HARM. Application of the RISK MANAGEMENT PROCESS then ensures that the probability of loss of the performance aspect is low enough to make the RESIDUAL RISK acceptable.~~

~~A problem with ESSENTIAL PERFORMANCE exists when the feature or function in question is either absent or its characteristics are degraded to a point that the ME EQUIPMENT or ME SYSTEM is no longer suitable for its INTENDED USE.~~

In order to achieve its INTENDED USE, the ME EQUIPMENT or ME SYSTEM needs to perform within certain limits. These limits are usually specified by the MANUFACTURER but could be specified by this standard, a collateral standard or a particular standard in the IEC 60601 family.

Examples of ESSENTIAL PERFORMANCE are:

– ~~accuracy of a life-supporting function or~~ correct administration of a drug by a syringe pump where inaccuracy/incorrect administration would cause an unacceptable RISK to the PATIENT;

– the ability of an electrocardiograph/monitor to recover from the effects of the discharge of a defibrillator where the failure to recover could lead to an incorrect response by the medical staff that would present an unacceptable RISK to the PATIENT;

– correct operation of an ALARM SYSTEM in an intensive care or operating room monitoring system where an incorrect/missing ALARM SIGNAL could lead to an incorrect response by the medical staff that would present an unacceptable RISK to the PATIENT; or

– correct output of diagnostic information from ME EQUIPMENT that is likely to be relied upon to determine treatment, where incorrect information could lead to an inappropriate treatment that would present an unacceptable RISK to the PATIENT.

~~ESSENTIAL PERFORMANCE is identified without taking into account the probability of occurrence of factors that could result in a loss of functionality. These factors are taken into account in the RISK MANAGEMENT PROCESS.~~

For purposes of this standard, performance related to BASIC SAFETY aspects of the ME EQUIPMENT, such as the performance of BASIC INSULATION, is not considered to be ESSENTIAL PERFORMANCE.

Particular and collateral standards in the IEC 60601 family are expected to identify specific ESSENTIAL PERFORMANCE.

Subclause 3.33 – FUNCTIONAL CONNECTION

The defined term FUNCTIONAL CONNECTION is used to facilitate the definition of an ME SYSTEM. The FUNCTIONAL CONNECTION is a coupling between items of an ME SYSTEM, including the possibility of supplying power.

The phrase “or otherwise” could include mechanical, optical or wireless connections for example.

Subclause 3.35 – FUNCTIONAL EARTH TERMINAL

In ME EQUIPMENT, functional earth connections can be made by means of a FUNCTIONAL EARTH TERMINAL that is accessible to the OPERATOR. Alternatively this standard also allows a functional earth connection for CLASS II ME EQUIPMENT via a green and yellow conductor in a POWER SUPPLY CORD. In this case the parts to which this conductor is connected cannot be ACCESSIBLE PARTS (see 8.6.9), and have to be insulated from ACCESSIBLE PARTS.

Subclause 3.38 – HARM

The definition of HARM is based on the definition in ISO 14971 modified to include animals. This change was made since the scope of the IEC 60601-1 includes the safety of animals.

Copyright International Electrotechnical Commission
Provided by IHS Markit under license with IEC
No reproduction or networking permitted without license from IHS
Not for Resale, 08/26/2020 19:12:41 MDT

Subclause 3.40 – HAZARDOUS SITUATION

As used in this standard, a HAZARD cannot result in HARM until such time as a sequence of events or other circumstances (including NORMAL USE) lead to a HAZARDOUS SITUATION. As a result of the RISK MANAGEMENT PROCESS, the related RISK acceptability can be assessed by estimating both SEVERITY and probability of occurrence of the HARM that could result from this HAZARDOUS SITUATION (see Figure A.8 adapted from ~~the draft text of the 2nd edition of the ISO 14971~~ Figure C.1 of ISO 14971:2019).

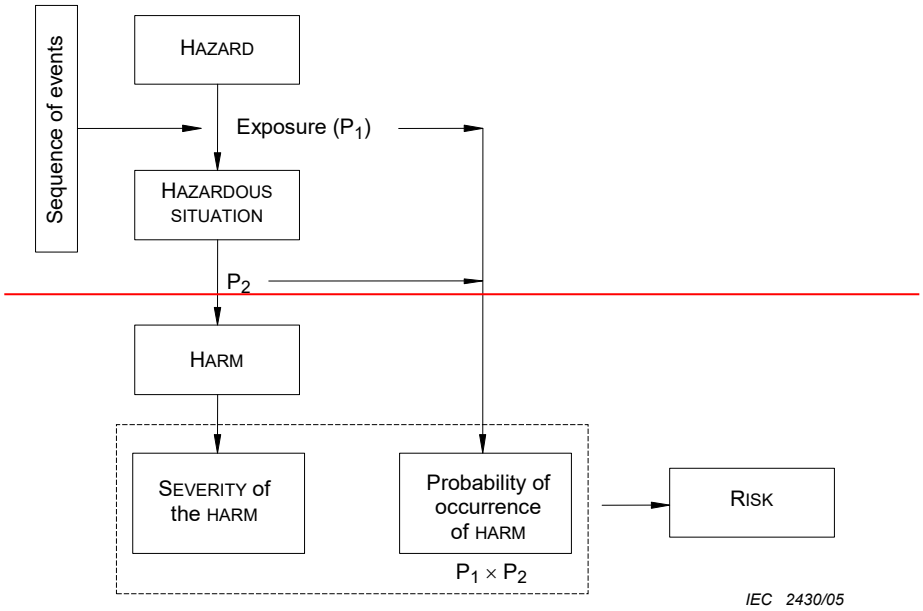

~~NOTE P_1 is the probability of a HAZARDOUS SITUATION occurring.~~
~~P_2 is the probability of a HAZARDOUS SITUATION leading to a HARM.~~

Copyright International Electrotechnical Commission
Provided by IHS Markit under license with IEC
No reproduction or networking permitted without license from IHS
Not for Resale, 08/26/2020 19:12:41 MDT

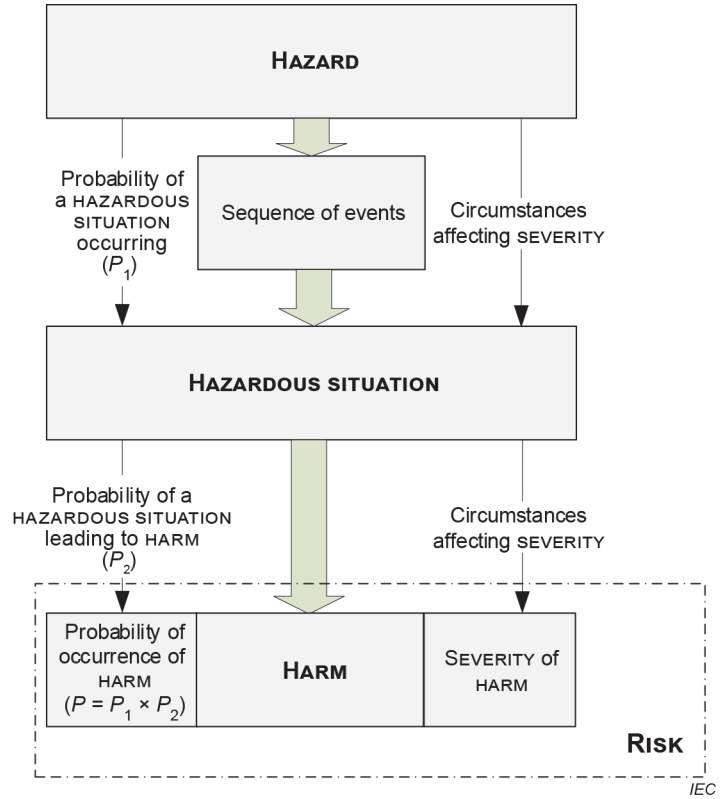

NOTE 1 Depending on the complexity of the ME EQUIPMENT or ME SYSTEM, a HAZARD can lead to multiple HAZARDOUS SITUATIONS, and each HAZARDOUS SITUATION can lead to multiple HARMS.

NOTE 2 The probability of occurrence of HARM (P) can be composed of separate P_1 and P_2 values.

NOTE 3 The thin arrows represent elements of RISK ANALYSIS and the thick arrows depict how a HAZARD can lead to HARM.

Figure A.8 – ~~Pictorial representation~~ Illustration of the relationship of HAZARD, sequence of events, HAZARDOUS SITUATION and HARM

~~**Subclause 3.44 – INTENDED USE**~~

~~ISO 14971:2000 defined the compound term INTENDED USE/INTENDED PURPOSE because, at the time that version was being developed, there was no consensus on which term to use. The European Medical Device Directive uses "intended purpose," whereas the United States regulations use "intended use." Both terms have essentially the same definition. After some year of experience with applying ISO 14971, it has generally been accepted that the combined term is unwieldy and a consensus has emerged to use the shorter term "intended use." The second edition of ISO 14971 (in preparation) is expected to use "intended use" as the preferred term with "intended purpose" being an "admitted term." To avoid being out of step with the future edition of ISO 14971, this standard has adopted the shorter defined term INTENDED USE. The definition itself is identical to that in ISO 14971:2000 and to the definition that is expected to be in the second edition of ISO 14971.~~

Subclause 3.49 – MAINS PART

A definition of MAINS PART is needed to identify the parts to which certain requirements apply. The definition given in the first and second editions of this standard depended on another defined term, "conductive connection." During the development of this edition, a difficulty with the definition of "conductive connection" became apparent and the requirements were revised so the defined term was no longer needed. This necessitated a new definition of MAINS PART focussing on the MEANS OF PROTECTION that separate the MAINS PART from other parts.

Copyright International Electrotechnical Commission
Provided by IHS Markit under license with IEC
No reproduction or networking permitted without license from IHS
Not for Resale, 08/26/2020 19:12:41 MDT

Subclause 3.50 – MAINS PLUG

A definition of MAINS PLUG is needed to identify the plug to which certain requirements apply. The words “mains plug” without a definition would also cover other connectors within ME EQUIPMENT that carry MAINS VOLTAGE.

Subclause 3.56 – MAXIMUM MAINS VOLTAGE

Several requirements and tests of this standard relate to the possibility that an unintended voltage originating from an external source becomes connected to the PATIENT or to certain parts of the ME EQUIPMENT. The actual magnitude of such a voltage is unknown but it is assumed to be related to the voltage of the SUPPLY MAINS in the location where the ME EQUIPMENT is used. See also the rationale for 8.5.3.

In the early stages of preparing this edition, a defined term “reference supply voltage” was introduced to avoid repetition of extensive wording. During the review of the National Committees’ comments on an early draft, it became apparent that there was some confusion between the defined term “reference supply voltage” and the undefined term “reference voltage” which was used in relation to the requirements for dielectric strength, CREEPAGE DISTANCES and AIR CLEARANCES.

In order to clarify the requirements, the term “reference supply voltage” has been replaced by MAXIMUM MAINS VOLTAGE and “reference voltage” has been replaced by the defined terms WORKING VOLTAGE and PEAK WORKING VOLTAGE.

Subclause 3.57 – MAXIMUM PERMISSIBLE WORKING PRESSURE

The MAXIMUM PERMISSIBLE WORKING PRESSURE is decided by a competent person, taking into account the original design specification, the manufacturer's rating, the current condition of the vessel and the circumstances of use.

In some countries, the figure could be reduced from time to time.

Subclause ~~3.60~~ 3.58 – MEANS OF OPERATOR PROTECTION

See the rationale for 8.5.1.

Subclause 3.59 – MEANS OF PATIENT PROTECTION

See the rationale for 8.5.1.

Subclause ~~3.58~~ 3.60 – MEANS OF PROTECTION

One guiding principle in the development of the third edition of this standard was to make it less prescriptive than the second edition, especially Clauses 17 and 20 of the second edition. The concept of MEANS OF PROTECTION was conceived as a generic one that could cover a number of things such as PROTECTIVE EARTH CONNECTIONS, BASIC INSULATION, SUPPLEMENTARY INSULATION, impedances, etc; and that might also be expanded to include other things which serve in the same capacity but have not yet been envisaged or are not yet practical. This concept, with the general requirement for ME EQUIPMENT to have two MEANS OF PROTECTION, fitted in well with the single fault philosophy, which all agreed was to be retained in the third edition. It enables a consistent approach to carry through a design effort without getting bogged down in the wordy prescriptive subclauses.

The concept also fitted in well when it was decided to differentiate protection of PATIENTS from protection of OPERATORS.

Some National Committee comments during the development of this edition suggested that the concept could be extended to apply to protection against HAZARDS other than electric shock. However it was decided that such a change would not be justified by the benefits.

Subclause 3.63 – MEDICAL ELECTRICAL EQUIPMENT

--`,,```,,,,````-`-`,,`,,`,`,,`---

Copyright International Electrotechnical Commission
Provided by IHS Markit under license with IEC
No reproduction or networking permitted without license from IHS Not for Resale, 08/26/2020 19:12:41 MDT

The present definition of ME EQUIPMENT excludes multiple connections to the same particular SUPPLY MAINS, but does not exclude different connectors to different particular SUPPLY MAINS. However, connection to more than one of different SUPPLY MAINS at the same time should be avoided. While it might be possible to design equipment with provision to be connected simultaneously to two different SUPPLY MAINS in an electrically safe manner, the particular ~~HAZARDS~~ HAZARDOUS SITUATIONS that might arise have not been identified in this standard.

This standard applies several terms to describe ME EQUIPMENT, ACCESSORIES and ME EQUIPMENT parts. They are FIXED (3.30), STATIONARY (3.118), TRANSPORTABLE (3.130), MOBILE (3.65), PORTABLE (3.85), HAND-HELD (3.37) and BODY-WORN (3.144). To help in understanding the relationship of these terms, the chart in Figure A.20 was developed.

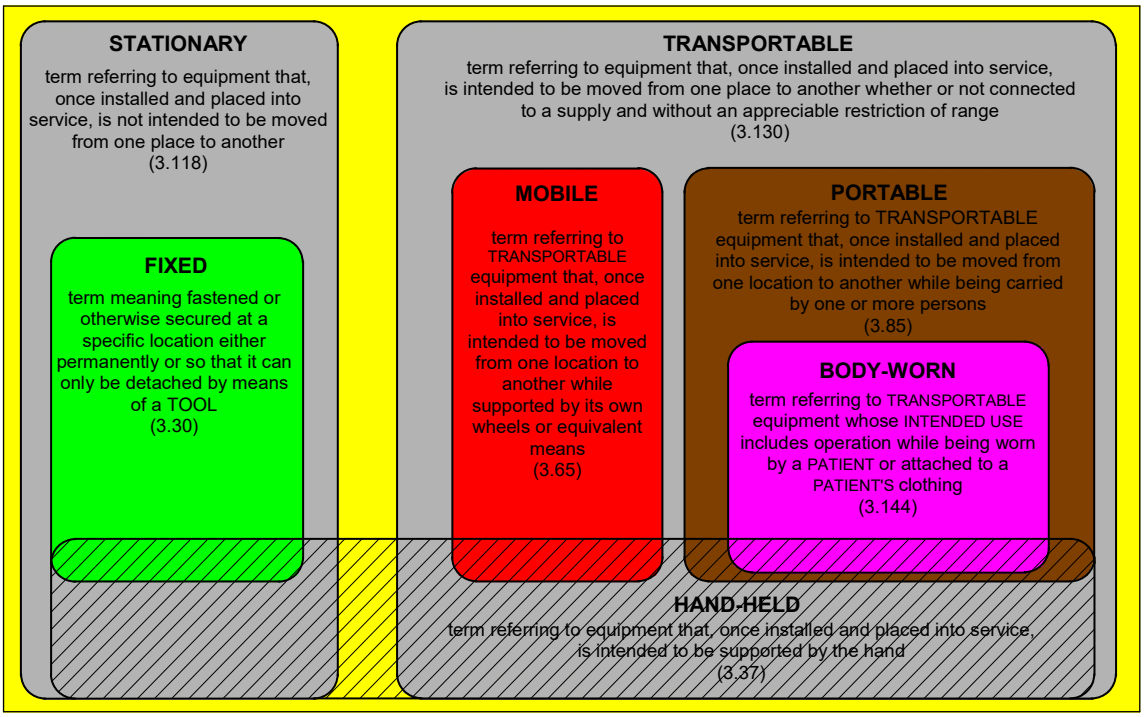

Figure A.20 – Relationship of the terms used to describe equipment, ACCESSORIES or equipment parts

Subclause 3.64 – MEDICAL ELECTRICAL SYSTEM

It is common practice for MANUFACTURERS, RESPONSIBLE ORGANISATIONS and OPERATORS to connect ME EQUIPMENT and other medical or non-medical equipment to MULTIPLE SOCKET-OUTLETS. The inclusion of such arrangements within the definition of ME SYSTEM brings them within the scope of this standard and thus allows appropriate requirements to be specified for BASIC SAFETY and ESSENTIAL PERFORMANCE.

To minimize the impairment of the safety level of this standard, the connection of a MULTIPLE SOCKET-OUTLET to the SUPPLY MAINS is subject to certain conditions. Subclause 16.9.2.1 requires that MULTIPLE SOCKET-OUTLETS are constructed to comply with the requirements from this standard applying to ME EQUIPMENT.

Subclause 3.66 – MODEL OR TYPE REFERENCE

The MODEL OR TYPE REFERENCE is intended to establish the relationship of the ME EQUIPMENT to commercial and technical publications, to ACCOMPANYING DOCUMENTS and between separable parts of ME EQUIPMENT. It is also important for identifying of ME EQUIPMENT or ACCESSORIES in case of a safety alert or other required field action.

Copyright International Electrotechnical Commission
Provided by IHS Markit under license with IEC
No reproduction or networking permitted without license from IHS
Not for Resale, 08/26/2020 19:12:41 MDT

Subclause 3.67 – MULTIPLE SOCKET-OUTLET

The definition is derived from IEC 60884-1.

In the second edition of IEC 60601-1-1 [13], there were definitions for multiple portable socket-outlet and auxiliary mains socket-outlet. In this edition, these definitions have been merged.

A single socket-outlet forming part of an equipment is also considered a MULTIPLE SOCKET-OUTLET.

MULTIPLE SOCKET-OUTLETS are sometimes necessary and offer advantages and disadvantages, which have to be investigated in order to establish a balance. MULTIPLE SOCKET-OUTLETS might be necessary for the following reasons:

– to minimize the number of POWER SUPPLY CORDS lying on the floor;
– to allow all the equipment necessary for proper treatment or diagnosis to be used despite an insufficient number of FIXED mains socket-outlets;
– to improve mobility by having all equipment on one trolley;
– to reduce potential differences within the protective earth wiring to below those that occur in some FIXED installations.

The use of MULTIPLE SOCKET-OUTLETS should be avoided as far as possible for the following reasons:

– combined EARTH LEAKAGE CURRENTS could result in:
  - excessive EARTH LEAKAGE CURRENT in NORMAL CONDITION,
  - excessive TOUCH CURRENT in the SINGLE FAULT CONDITION of the broken PROTECTIVE EARTH CONDUCTOR of the MULTIPLE SOCKET-OUTLET supply cable;
– availability of the SUPPLY MAINS depends on the reliability of a single FIXED mains socket-outlet;
– a complete interruption of electrical supply is possible and might require a long set-up time to reactivate the complete ME SYSTEM;
– only one PROTECTIVE EARTH CONNECTION to the electrical installation is provided; this is less reliable than when each part of the ME SYSTEM is directly earthed;
– the protective earth resistance is increased.

The optimum solution includes installing an adequate number of FIXED mains socket-outlets according to appropriate installation rules.

Subclause 3.68 – NETWORK/DATA COUPLING

The definition of NETWORK/DATA COUPLING has been written so as not to be restricted to any particular technology, such as electronic transmission along wires. The definition allows for wireless electromagnetic transmission, infra-red, optical, etc., as well as any future technology.

Subclause 3.73 – OPERATOR

The OPERATOR is defined as the person who handles the equipment, which could be ME EQUIPMENT or any item of equipment in the context of an ME SYSTEM. This person could be:

– a health care professional using the equipment with a PATIENT,
– either a PATIENT or a layperson assisting a PATIENT in a home-care environment,
– a person who is using the equipment to compensate or alleviate the effects of disease, injury or disability, or
– the person that installs, assembles, maintains or repairs the equipment.

Copyright International Electrotechnical Commission
Provided by IHS Markit under license with IEC
No reproduction or networking permitted without license from IHS Not for Resale, 08/26/2020 19:12:41 MDT

People who install, assemble, maintain or repair the equipment are also referred to in this standard as SERVICE PERSONNEL.

Many requirements in this standard are constructed so that SERVICE PERSONNEL experience the same RESIDUAL RISK as the person who uses the equipment for its INTENDED USE. However, SERVICE PERSONNEL, who are often engineers or engineering technicians, are expected to have certain competencies and to take account of the technical description. Other OPERATORS are expected to have different competencies and to follow the instructions for use. Therefore, this standard presumes in certain circumstances that the safety of SERVICE PERSONNEL depends partly on their knowledge and training to take appropriate precautions when gaining access to hazardous parts. The other OPERATORS are presumed to be competent to use the ME EQUIPMENT or ME SYSTEM but are not necessarily competent to avoid RISKS that can arise during servicing.

Subclause 3.75 – OXYGEN RICH ENVIRONMENT

At a 25 % oxygen concentration, the increase in the burning rate of a paper strip is only moderate (30 %) (per NFPA 99 [42]). In NFPA 99, 23,5 % is defined to be oxygen-enriched atmosphere that requires protective measures, but it allows this value also for oxygen chambers at pressures of more than 200 kPa. NASA allows concentrations of 25,9 % in its space shuttles (NFPA 53 [41]). UL 2601-1 [44] uses 25 % as threshold value. A sample of epoxy circuit board material burns incompletely at 20,9 % and 25,9 % (burning length of 3 cm and 8,3 cm) but completely at 30 % according to Rimanosky, E.M. et al., ASTM STP 1267 [36].

When first considering the relationship between flame rate and the amount of oxygen, it would seem reasonable that the flame rate would be proportional to the total locally available amount of oxygen, which is given by the partial pressure. However, experience shows that this is only true to a degree. Figures C-1.2.2(a) and (b) in NFPA 53:1999 and Figure A.3.3.14.4 in NFPA 99:2002 show that for paper strips the increase of flame rate with oxygen concentration at a set absolute pressure is stronger than the increase of flame rate with absolute pressure at a set concentration. For the borderline “complete combustion” to “incomplete combustion” the oxygen concentration seems to come to the same number (14 %) at high pressures, independent of the absolute (and partial) pressure. Therefore, to be on the safe side, two numbers are given in the definition. The concentration limit makes sure that for smaller ambient pressures than one atmosphere the danger does not increase. The partial pressure limit makes sure that for higher pressures (e.g. in oxygen chambers) the situation is safe.

Subclause 3.77 – PATIENT AUXILIARY CURRENT

PATIENT AUXILIARY CURRENT is a current that is necessary for:

– the ME EQUIPMENT to perform its function, e.g. electrical impedance imaging, monitoring of respiration by impedance changes;
– monitoring the correct operation of the ME EQUIPMENT, e.g. contact impedance of electrodes with the PATIENT;
– the functioning of the ME EQUIPMENT;

or that is incidental to the functioning of the ME EQUIPMENT. An example is the bias current of an amplifier for physiological signals.

PATIENT AUXILIARY CURRENT could have a function, but not a physiological function, or it could have no function.

Subclause 3.78 – PATIENT CONNECTION

One of the HAZARDS associated with the application of PATIENT CONNECTIONS is the fact that LEAKAGE CURRENT can flow through the PATIENT via the PATIENT CONNECTIONS. Particular limits are placed on the magnitude of these currents, both in the NORMAL CONDITION and in various fault conditions.

--`,```,,,,,,,,,,```-`-`,,`,,`,`,,`---
Copyright International Electrotechnical Commission
Provided by IHS Markit under license with IEC
No reproduction or networking permitted without license from IHS
Not for Resale, 08/26/2020 19:12:41 MDT

NOTE The current that flows through the PATIENT between various PATIENT CONNECTIONS is known as PATIENT AUXILIARY CURRENT. The LEAKAGE CURRENT that flows through the PATIENT to earth is known as PATIENT LEAKAGE CURRENT.

The definition of PATIENT CONNECTION is intended to ensure the identification of each individual part of the APPLIED PART between which current could flow as PATIENT AUXILIARY CURRENT, and from which PATIENT LEAKAGE CURRENT could flow into an earthed PATIENT.

In some cases it will be necessary to carry out PATIENT LEAKAGE CURRENT and PATIENT AUXILIARY CURRENT measurements to determine which parts of the APPLIED PARTS are individual PATIENT CONNECTIONS.

PATIENT CONNECTIONS are not always accessible to touch. Any conductive parts of the APPLIED PART that come into electrical contact with the PATIENT, or which are prevented from doing so only by insulation or air gaps that do not comply with the relevant dielectric strength tests or AIR CLEARANCE and CREEPAGE DISTANCE requirements specified in this standard, are PATIENT CONNECTIONS. See also the rationale for 3.8.

Examples include the following.

– A table top supporting a PATIENT is an APPLIED PART. Sheets do not provide adequate insulation and the conductive parts of the table top would therefore be classified as PATIENT CONNECTIONS.
– The administration set or needle of an infusion controller is an APPLIED PART. Conductive parts of the controller separated from the (potentially conducting) fluid column by inadequate insulation would be PATIENT CONNECTIONS.

Where an APPLIED PART has a surface of insulating material, 8.7.4.7 ~~d)~~ e) specifies that it is tested using foil or saline solution. This is then considered as a PATIENT CONNECTION.

Subclause 3.79 – PATIENT ENVIRONMENT

It is difficult for this standard to define dimensions for the volume in which diagnosis, monitoring or treatment occurs. The dimensions for the PATIENT ENVIRONMENT given in Figure A.9 have been justified in practice.

--`,,```,,,,````-`-`,,`,,`,`,,`---

Copyright International Electrotechnical Commission
Provided by IHS Markit under license with IEC
No reproduction or networking permitted without license from IHS Not for Resale, 08/26/2020 19:12:41 MDT

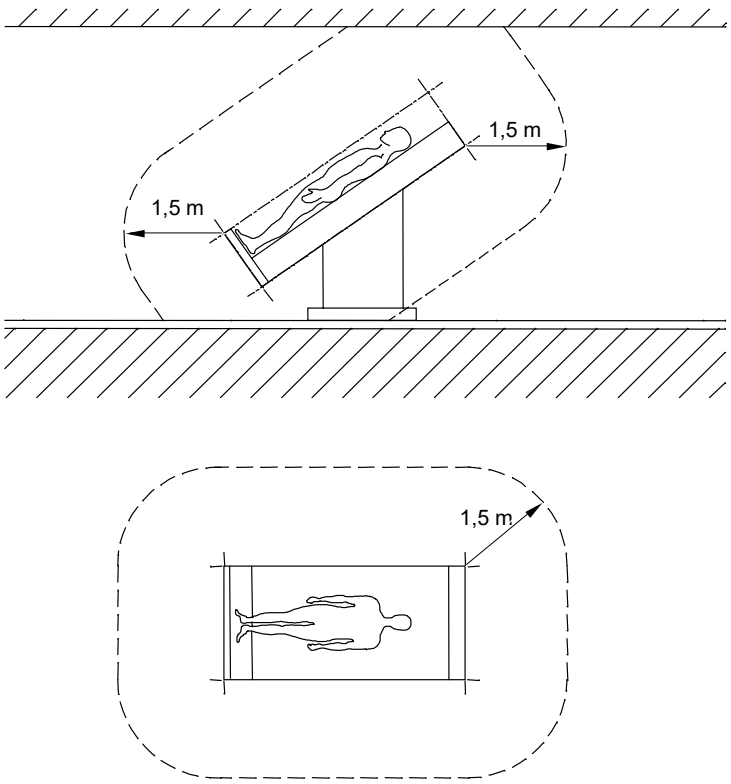

IEC 2431/05

NOTE The dimensions in the figure show minimum extent of the PATIENT ENVIRONMENT in a free surrounding.

Figure A.9 – Example of PATIENT ENVIRONMENT

Subclause 3.81 – PEAK WORKING VOLTAGE

This definition was taken from IEC 60950-1:~~2001~~2005, subclause ~~1.2.9.7~~ 1.2.9.8. Use of this term along with the defined term WORKING VOLTAGE should make the INSULATION CO-ORDINATION requirements incorporated from IEC 60950-1 easier to understand for those already familiar with that standard. See also the rationale for 3.56.

Subclause 3.99 – REINFORCED INSULATION

The term “insulation system” does not imply that the insulation has to be one homogeneous piece. It could comprise several layers that cannot be tested separately as SUPPLEMENTARY or BASIC INSULATION.

Subclause 3.110 – SECONDARY CIRCUIT

This definition is based on the definition of the same term in IEC 60950-1:~~2001~~2005, subclause ~~1.2.8.4~~ 1.2.8.5 and identifies circuits that are subject to lower transient overvoltages than the MAINS PART and therefore have lower values for dielectric strength test voltages and AIR CLEARANCES.

Subclause 3.112 – SEPARATION DEVICE

Assembly of equipment into an ME SYSTEM could involve connections that transfer power or signals. In both cases, the same separation requirements are needed.

Subclause 3.115 – SIGNAL INPUT/OUTPUT PART

If a SIGNAL INPUT/OUTPUT PART carries electrical signals, or if it carries non-electrical signals but nevertheless introduces a conductive connection to the other equipment (e.g. through an optical fibre cable with a metal sheath), appropriate separation from other circuits can be necessary to satisfy the requirements of this standard. Alternatively a SIGNAL INPUT/OUTPUT

--`,,```,,,,````-`-`,,`,,`,`,,`---
Copyright International Electrotechnical Commission
Provided by IHS Markit under license with IEC
No reproduction or networking permitted without license from IHS
Not for Resale, 08/26/2020 19:12:41 MDT

PART could have no conductive connections, in which case it will automatically satisfy the requirements for electrical BASIC SAFETY.

Subclause 3.120 – SUPPLY MAINS

An external d.c. power source (e.g. in an ambulance) is considered as a SUPPLY MAINS. ME EQUIPMENT specified for connection to such a power source has to satisfy all requirements for mains powered ME EQUIPMENT. In the past, some ME EQUIPMENT specified for such a power source has had a direct connection between the ENCLOSURE and one side of the supply, presumed to be at earth potential. In the event of interruption of the connection to this side of the supply, the ENCLOSURE of such ME EQUIPMENT assumes the supply potential and would therefore exceed the specified limit for TOUCH CURRENT. The first and second editions of this standard were intended to exclude such an arrangement, but this was not always understood by users of the standard. This rationale has been added to clarify the requirement.

Subclause 3.132 – TYPE B APPLIED PART

TYPE B APPLIED PARTS provide the lowest degree of PATIENT protection of all the types of APPLIED PART and are not suitable for DIRECT CARDIAC APPLICATION.

The PATIENT CONNECTION(S) of a TYPE B APPLIED PART could be:

– PROTECTIVELY EARTHED;

– connected to earth but not PROTECTIVELY EARTHED; or

– floating, but not isolated from earth to the degree that would be required for a TYPE BF APPLIED PART.

Subclause 3.133 – TYPE BF APPLIED PART

TYPE BF APPLIED PARTS provide a degree of PATIENT protection higher than provided by TYPE B APPLIED PARTS. This is achieved by isolating the PATIENT CONNECTIONS from earthed parts and other ACCESSIBLE PARTS of the ME EQUIPMENT, thus limiting the magnitude of current that would flow through the PATIENT in the event that an unintended voltage originating from an external source is connected to the PATIENT, and thereby applied between the PATIENT CONNECTIONS and earth. However, TYPE BF APPLIED PARTS are not suitable for DIRECT CARDIAC APPLICATION.

Subclause 3.134 – TYPE CF APPLIED PART

TYPE CF APPLIED PARTS provide the highest degree of PATIENT protection. This is achieved by increased isolation of the PATIENT CONNECTION from earthed parts and other ACCESSIBLE PARTS of the ME EQUIPMENT, further limiting the magnitude of possible current flow through the PATIENT. TYPE CF APPLIED PARTS are suitable for DIRECT CARDIAC APPLICATION insofar as PATIENT LEAKAGE CURRENT is concerned, though they could be unsuitable in other respects, such as sterility or biocompatibility.

Subclause 3.139 – WORKING VOLTAGE

This definition is taken from IEC 60950-1:~~2001~~2005, subclause 1.2.9.6. Use of this term along with the defined term PEAK WORKING VOLTAGE should make the INSULATION CO-ORDINATION requirements incorporated from IEC 60950-1 easier to understand for those already familiar with that standard. See also the rationale for 3.56.

Subclause 3.150 – INFORMATION SIGNAL

ALARM SIGNALS are only generated because of the presence of an ALARM CONDITION. In contrast, INFORMATION SIGNALS are those that are generated regardless of whether or not an ALARM CONDITION is present. The waveform of a physiological signal and the associated numeric are considered INFORMATION SIGNALS as they are independent of ALARM CONDITIONS. INFORMATION SIGNALS can frequently convey information that is “alarming” to the OPERATOR but are not, in and of themselves an ALARM SIGNAL.

Copyright International Electrotechnical Commission
Provided by IHS Markit under license with IEC
No reproduction or networking permitted without license from IHS
Not for Resale, 08/26/2020 19:12:41 MDT

EXAMPLE 1 The decreasing tonal frequency of the auditory INFORMATION SIGNAL of some pulse oximeters. The decreased tone is “alarming” to the OPERATOR, but in itself is not an ALARM SIGNAL.

EXAMPLE 2 An electrocardiograph waveform indicating ventricular fibrillation.

EXAMPLE 3 A heart rate of 20 beats/min.

Subclause 3.152 – MAXIMUM EQUIPMENT PRESSURE

The maximum pressure to which a part of ME EQUIPMENT can be subjected in NORMAL CONDITION and SINGLE FAULT CONDITION is determined by analysis and where needed, measurements. Traditionally it has been considered to be whichever is the highest of the following:

- the RATED maximum supply pressure from an external source;
- the pressure setting of a pressure-relief device provided as part of the assembly; or
- the maximum pressure that can be developed by a source of pressure that is part of the assembly, unless the pressure is limited by a pressure-relief device.

The RATED maximum supply pressure is marked on the ME EQUIPMENT (7.2.18). If the maximum source pressure rating is based on a regulator at supply, consider failure of the regulator. MAXIMUM EQUIPMENT PRESSURE might be that of the rating of regulator at the pressure input connector of the ME EQUIPMENT (or specified as required during installation), or the rating of the pressure relief device provided within the ME EQUIPMENT. Pressure (or vacuum) systems will typically directly control pressure (or vacuum) with a pressure regulator and a pressure relief device. The single-fault pressure becomes the relief device pressure (failed regulator). Electronics (or electromechanical circuits) could indirectly regulate pressure (or vacuum). If pressure is from a pump or compressor, there could be regulation provided by motor drive from power convertor or invertor system. If pressure is from a heat source, then consider faults to electronic ignition or temperature control system. Typically a pressure relief device would provide pressure limiting backup to electronic or electromechanical faults. In any case, the MAXIMUM EQUIPMENT PRESSURE in SINGLE FAULT CONDITION needs to be considered.

When considering the HAZARDOUS SITUATION that overpressure (or underpressure) can present, the concern is the bursting/rupture (or implosion) of a part could lead to HARM. The gauge pressure speaks to the bursting (or implosion) HAZARDOUS SITUATION most directly since it is the difference between internal absolute pressure and outside absolute pressure. The hydraulic test on pressure vessels in 9.7.5 is based on the maximum equipment gauge pressure. Pressure components are normally rated with a gauge pressure (e.g. kPaG). An absolute pressure rating could be translated to a gauge pressure rating:

Gauge pressure = inside absolute pressure – outside (e.g. atmospheric) absolute pressure.

ME EQUIPMENT MANUFACTURERS are required to specify intended ranges for absolute air pressure (temperature, and humidity) for modes, transport and storage, and operating. With home care equipment, the additional mode of transport and storage between uses needs to be specified. Subclause 7.2.17 requires these ranges on shipping containers, and 7.9.3.1 requires them in the technical description that users receive. This gives persons the environmental ranges that designers considered when selecting pressure components.

--`,,```,,,,````-`-`,,`,,`,`,,`---
Copyright International Electrotechnical Commission
Provided by IHS Markit under license with IEC
No reproduction or networking permitted without license from IHS
Not for Resale, 08/26/2020 19:12:41 MDT

Subclause 4.1 –Conditions for application to ME EQUIPMENT or ME SYSTEMS

The condition for application of RISK MANAGEMENT to ME EQUIPMENT and ME SYSTEMS includes ~~reasonable~~ reasonably foreseeable misuse. The MANUFACTURER identifies foreseeable misuse as part of the RISK ANAYLSIS (see ~~ISO 14971:2000, subclause~~ 4.2). This identification could include the results of a USABILITY ENGINEERING PROCESS.

Subclause 4.2 –RISK MANAGEMENT PROCESS for ME EQUIPMENT or ME SYSTEMS

A change introduced in the third edition of this standard is that, in specifying minimum BASIC SAFETY and ESSENTIAL PERFORMANCE requirements, provision is made for assessing the adequacy of the design PROCESS where this provides an appropriate alternative to the application of laboratory testing with specific pass/fail criteria, (e.g. in assessing the safety of new technologies). Application of this principle leads to the introduction of a general requirement to carry out elements of a RISK MANAGEMENT PROCESS as part of demonstrating compliance with this standard.

The MANUFACTURER is responsible for ensuring that the design and construction of the ME EQUIPMENT renders it suitable for its INTENDED ~~PURPOSE~~ USE and that any RISKS that are associated with its use are acceptable when weighed against the benefits. ISO 14971 specifies a PROCEDURE for the MANUFACTURER to identify HAZARDS associated with the ME EQUIPMENT or ME SYSTEM and its ACCESSORIES, to estimate and evaluate the RISKS associated with those HAZARDS~~,~~ and to control those RISKS~~, and to monitor the effectiveness of that control~~.

The scope of this standard is confined to type examination of ME EQUIPMENT and ME SYSTEMS; it does not extend to lifecycle monitoring. For this reason, the monitoring of production and post-production information and the planning thereof, as required by ISO 14971:2019, is excluded from the RISK MANAGEMENT PROCESS described in this standard. The requirement in ISO 14971:2019 for periodic review of the suitability of the RISK MANAGEMENT PROCESS is also excluded.

Compliance with the clauses of this standard that contains specific, verifiable requirements is presumed to reduce the associated RISK(S) to an acceptable level.

The MANUFACTURER of ME SYSTEMS should make this determination on a system level. The MANUFACTURER should assess RISKS resulting from the fact that individual system components have been integrated into one system. This assessment should include all aspects of the information exchanged between the system components. Even when these components are non-ME ELECTRICAL components, the potential RISK related to the integration of these components into the ME SYSTEM need to be considered. Further requirements for the integration of non-medical equipment into an ME SYSTEM are described in Clause 16. It gives the requirements for an ME SYSTEM and how RISKS associated with non-ME EQUIPMENT are addressed.

It should be noted that compliance with ISO 14971 does not require that the MANUFACTURER have a formal quality system in place.

This RISK MANAGEMENT PROCESS results in a set of RECORDS and other documents: the RISK MANAGEMENT FILE. Compliance of the RISK MANAGEMENT PROCESS is checked by inspection of the RISK MANAGEMENT FILE.

In all cases, the MANUFACTURER is to be considered the expert on the device being developed and on the HAZARDS associated with its use.

Where compliance tests are by inspection or review of the RISK MANAGEMENT FILE, only the relevant parts of the RISK MANAGEMENT FILE need to be reviewed, e.g. MANUFACTURER'S calculations or test results, or the determination of RISK acceptability.

Some requirements of this standard use the term unacceptable RISK, other requirements use the term HAZARDOUS SITUATION. All unacceptable RISKS result from a HAZARDOUS SITUATION, not all HAZARDOUS SITUATIONS result in an unacceptable RISK.

Copyright International Electrotechnical Commission
Provided by IHS Markit under license with IEC
No reproduction or networking permitted without license from IHS
Not for Resale, 08/26/2020 19:12:41 MDT

In deciding which ~~term~~ phrase to use in a requirement the following rule has been used.

~~– Unacceptable RISK is used when the MANUFACTURER has to, or is permitted to, make a judgment about the acceptability of the RISK. This judgement needs to be supported by an appropriate rationale such as experience, historical data, etc.~~

~~– HAZARDOUS SITUATION is used when the possibility of HARM determines whether certain requirements apply. In these cases the only determination a MANUFACTURER has to make is whether or not a HAZARDOUS SITUATION exists; this determination is made regardless of the RISK resulting from that HAZARDOUS SITUATION.~~

~~– The term HAZARD is used when the HAZARD is not necessarily exposed.~~

– The phrase “no unacceptable RISK” is used when the MANUFACTURER has to, or is permitted to, make a judgement about the acceptability of the RISK. This judgement is to be supported by an appropriate rationale such as experience, historical data, etc.

– The phrase “no HAZARDOUS SITUATION” is used when the MANUFACTURER has to demonstrate (e.g. by technical drawing or technical description) that there is no exposure to a HAZARD or no possibility of HARM can develop. In these cases the only determination a MANUFACTURER has to make is whether or not a HAZARDOUS SITUATION exists; this determination is made regardless of the acceptability of the RISK that could develop from that HAZARDOUS SITUATION.

– The phrase “no HAZARD” is never used.

The following provides guidance on how to use several elements of the RISK MANAGEMENT PROCESS as defined in ISO 14971 within the context of IEC 60601-1.

– **INTENDED USE:** The INTENDED USE is determined at the highest level of the ME EQUIPMENT or ME SYSTEM and should be used in identifying HAZARDS or HAZARDOUS SITUATIONS related to the use of the ME EQUIPMENT or ME SYSTEM. The INTENDED USE is not (or very rarely) used in the evaluation of specific components. Further, the INTENDED USE is the primary input when determining what aspects of the clinical functions of the ME EQUIPMENT or ME SYSTEM constitute ESSENTIAL PERFORMANCE as required by 4.3.

– **HAZARD identification:** This standard and ISO 14971 require identification of all HAZARDS and HAZARDOUS SITUATIONS associated with the ME EQUIPMENT or ME SYSTEM, regardless of whether they are identified in an international safety standard or not (see 4.2.2, Note 1, and 4.2.3.2). This holds for NORMAL USE, reasonably foreseeable misuse and SINGLE FAULT CONDITIONS. However, when HAZARDS or HAZARDOUS SITUATIONS identified in this standard cannot occur for the specific ME EQUIPMENT or ME SYSTEM, the HAZARD identification would be performed only to document that the corresponding requirements of this standard do not apply. In this case, further RISK ASSESSMENT or VERIFICATION of compliance is not required. When a requirement does apply, no HAZARD identification is necessary (because the standard has already done so). For example, no HAZARD of electric shock arises in ME EQUIPMENT having no voltages capable of producing LEAKAGE CURRENTS that exceed the applicable limits as specified in 8.4.2 c).

– **RISK EVALUATION:** RISK is evaluated at two points in the RISK MANAGEMENT PROCESS—before and then again after implementation of RISK CONTROL measures. Evaluation before implementation of RISK CONTROL measures is applicable to the requirements of this standard only in order to demonstrate that the associated RISK is acceptable without applying a requirement. However, when this standard requires that RISKS related to a specific requirement remain acceptable or that no unacceptable RISK occurs in relation to a specific requirement, compliance is checked by inspection of the RISK MANAGEMENT FILE for the HAZARDS or HAZARDOUS SITUATIONS related to this requirement and for OBJECTIVE EVIDENCE (e.g. by MANUFACTURER’S calculations, analyses or test results) that the corresponding RISKS are judged to be acceptable based on the MANUFACTURER’S criteria for acceptability of RISK. The effectiveness of the RISK CONTROL measures is evaluated in accordance with subclause 7.2 of ISO 14971:2019.

– **RISK reduction:** When a requirement of this standard requires implementation of specific RISK CONTROL measures to assure that the associated RISK is acceptable, compliance is checked by either of the following:

Copyright International Electrotechnical Commission
Provided by IHS Markit under license with IEC
No reproduction or networking permitted without license from IHS
Not for Resale, 08/26/2020 19:12:41 MDT

- by assuring that the specific measures have been implemented, in which case no RISK MANAGEMENT and no evaluation of RESIDUAL RISK are required because the RISKS are assumed to be reduced to an acceptable level by the presence of the specific measures (meeting the objective requirements of this standard), or
- by inspection of the RISK MANAGEMENT FILE for the HAZARDS or HAZARDOUS SITUATIONS identified in the requirement in absence of the measures specified by the requirement and for OBJECTIVE EVIDENCE (e.g. by MANUFACTURER'S calculations, analyses or test results) that the corresponding RISKS are judged to be acceptable.

Subclauses 7.2.2 for detachable components and 7.2.17 for protective packaging are examples where special markings are required unless no unacceptable RISKS occur. So, either the markings must be provided or the RISKS in absence of those markings must be evaluated and judged acceptable. Another example is 15.4.1 a), for the design and construction of connector plugs.

– **Benefit-RISK analysis:** A benefit-RISK analysis according to subclause 7.4 of ISO 14971:2019 is only required when the RESIDUAL RISK associated with a specific HAZARD or HAZARDOUS SITUATION remains unacceptable using the criteria for RISK acceptability recorded in the RISK MANAGEMENT plan and further RISK CONTROL is not practicable. Such benefit-RISK analyses are not required when the RESIDUAL RISKS are judged acceptable or when the ME EQUIPMENT or ME SYSTEM complies with specific requirements of this standard. Subclause 11.1.2 is one of the few examples where a RISK/benefit analysis is required when temperature limits are exceeded to achieve a clinical purpose (see Table 24, footnote [b]).

Subclause 4.3 – ESSENTIAL PERFORMANCE

~~The concept of "safety" has been broadened from the BASIC SAFETY considerations in the first and second editions of this standard to include ESSENTIAL PERFORMANCE matters, (e.g. the accuracy of physiological monitoring equipment). Application of this principle leads to the change of the title from "Safety of medical electrical equipment, Part 1: General requirements for safety" in the second edition, to "Medical electrical equipment, Part 1: General requirements for basic safety and essential performance".~~

~~For an explanation of ESSENTIAL PERFORMANCE, see the rationale for 3.27.~~

During the initial RISK ANALYSIS, the MANUFACTURER identifies the performance of the clinical fuction(s) of the ME EQUIPMENT or ME SYSTEM that is necessary for achieving the INTENDED USE. The MANUFACTURER also identifies other qualitative and quantitative characteristics that could affect the safety of the ME EQUIPMENT or ME SYSTEM.

The performance limits specified by the MANUFACTURER could be anywhere within the full range of intended performance in NORMAL CONDITION and SINGLE FAULT CONDITION, to no performance.

The MANUFACTURER then determines if the loss or failure to perform within specified limits would result in a RISK to the PATIENT. The estimate is often made with the assumption that the performance aspect in question has been lost or degraded beyond the specified limits (i.e. P_1 in Figure A.8 is 100 %). The MANUFACTURER takes into account the probability of a HAZARDOUS SITUATION leading to HARM (P_2 in Figure A.8) as well as the SEVERITY of that HARM. In some instances P_2 could also be 100 %, in which case the RISK estimate is based entirely on the SEVERITY of the HARM. When considering the RISK associated with a level of degraded performance, which might include full loss, the analysis should include expected measures as prescribed in the ACCOMPANYING DOCUMENTS, which might return some or all performance after a delay including service to the ME EQUIPMENT or ME SYSTEM, or a return of some or all of the PATIENT'S medical care with back-up medical care measures.

The MANUFACTURER then evaluates the RISK using their established RISK acceptance criteria. If the RISK is unacceptable, then the identified performance is ESSENTIAL PERFORMANCE because RISK reduction is required to achieve an acceptable level of RESIDUAL RISK.

Copyright International Electrotechnical Commission
Provided by IHS Markit under license with IEC
No reproduction or networking permitted without license from IHS
Not for Resale, 08/26/2020 19:12:41 MDT

Once the ESSENTIAL PERFORMANCE is identified, the MANUFACTURER puts in place RISK CONTROL measures that are appropriate to reduce the RISK to an acceptable level. When conducting the RISK CONTROL option analysis, the MANUFACTURER is to follow the priority order listed in ISO 14971, namely:

a) inherent safety by design;

b) protective measures;

c) information for safety.

The RISK CONTROL measures selected need to be reasonably practicable and consistent with the generally accepted technology. For example, it might be possible to build a critical care ventilator that will continue to function in the presence of a single component failure, but, given the generally accepted technology, this is not practicable. Therefore, the MANUFACTURER might rely on a protective measure, such as an ALARM SYSTEM, to alert the OPERATOR of the failure so the OPERATOR can take appropriate and timely action to prevent the onset of HARM. The ALARM SIGNAL coupled with required OPERATOR training might be adequate RISK CONTROL measures to reduce the RISK arising from the loss or degradation of the identified performance to an appropriate level, i.e. the RESIDUAL RISK is acceptable. These RISK CONTROL measures can be integral with the consideration of ESSENTIAL PERFORMANCE.

Of course, the RISK CONTROL measure has to be sufficiently independent such that the condition that causes the loss or degradation of the identified performance does not compromise the effectiveness of the RISK CONTROL measure. This is consistent with the two MEANS OF PROTECTION philosophy employed in the IEC 60601 series. For example, an ALARM SYSTEM intended to alert the OPERATOR that the SUPPLY MAINS has been interrupted could not depend on the SUPPLY MAINS as the sole source of its power. A back-up battery could be used to power the ALARM SYSTEM if the SUPPLY MAINS is interrupted.

In RISK CONTROL, timing is everything. If there is insufficient time from the onset of the event (interruption of the SUPPLY MAINS) for the OPERATOR to register that an ALARM CONDITION has occurred and take appropriate action to prevent the onset of HARM, then the ALARM SYSTEM alone would not be an effective RISK CONTROL measure. A back-up power source to keep the ME EQUIPMENT operating for a period of time sufficient for the OPERATOR to take the necessary corrective action could also be required.

As with all aspects of the RISK MANAGEMENT PROCESS, the identification of ESSENTIAL PERFORMANCE can be iterative. The MANUFACTURER might have to revisit the process of determining what the ESSENTIAL PERFORMANCE is during the lifecycle of the ME EQUIPMENT or ME SYSTEM.

See also the rationale for 3.27.

Subclause 4.4– EXPECTED SERVICE LIFE

The EXPECTED SERVICE LIFE is the time period during which the ME EQUIPMENT or ME SYSTEM is expected to remain suitable for its INTENDED USE. It is also the period when all RISK CONTROL measures need to remain effective to ensure that RISKS remain acceptable.

The EXPECTED SERVICE LIFE needs to be determined by the MANUFACTURER, as part of the RISK MANAGEMENT PROCESS, as a precondition for assessing compliance with many requirements of this standard, such as 4.5, 4.7, 7.1.3, 8.6.3, 9.8.2 and 11.6.6.

In the ACCOMPANYING DOCUMENTS, the MANUFACTURER should provide information to allow the RESPONSIBLE ORGANIZATION to assess when the ME EQUIPMENT is approaching the end of its life. Such information should include the EXPECTED SERVICE LIFE as determined by the MANUFACTURER (e.g. in terms of years of service or number of uses) but could also include tests to be performed as part of preventive maintenance, or other criteria to allow the RESPONSIBLE ORGANIZATION to make an appropriate determination. The need for such information and the appropriate way to present it should be addressed as part of the RISK MANAGEMENT PROCESS.

Copyright International Electrotechnical Commission
Provided by IHS Markit under license with IEC
No reproduction or networking permitted without license from IHS Not for Resale, 08/26/2020 19:12:41 MDT

In defining the EXPECTED SERVICE LIFE, the MANUFACTURER should assume that the RESPONSIBLE ORGANIZATION will follow the MANUFACTURER'S instructions for routine maintenance. See 7.9.2.13.

Subclause 4.5 – ~~Equivalent safety for ME EQUIPMENT or ME SYSTEMS~~ Alternative RISK CONTROL measures or test methods for ME EQUIPMENT or ME SYSTEMS

This subclause allows alternative means of achieving ~~equivalent safety to be used~~ safety to those means specified in this standard. This is important as it permits a MANUFACTURER to use innovative solutions that ~~might be safer or~~ are safe and can have other benefits, e.g. lower cost or ~~performance~~ better manufacturability.

Because it is often difficult to ascertain a sense of RISK acceptability for an individual RISK CONTROL measure or test method, the MANUFACTURER is permitted to use scientific data, clinical opinion, or comparative studies on a case-by-case basis to establish that the RESIDUAL RISK from applying an alternative remains acceptable.

Documentation in the RISK MANAGEMENT FILE should show that the RESIDUAL RISK achieved using the alternative means ~~is~~ remains acceptable ~~because it is equal to or less than the RESIDUAL RISK achieved by applying the requirements of this standard~~ and is comparable to this standard. Comparative studies should take into account scientific studies referenced in this standard and applicable to the alternative means.

With Amendment 2, the application of the INSULATION CO-ORDINATION requirements in IEC 62368-1:2018 can be used as a MEANS OF OPERATOR PROTECTION (MOOP) for sub-assemblies/components that are built into ME EQUIPMENT. However, not all of the requirements for OPERATOR protection in IEC 62368-1:2018 have been integrated in Amendment 2. Only Clause 8 and one note in Clause 10 have been addressed. For the remainder of this document, the safety solutions in IEC 62368-1:2018 have not been taken into account in Amendment 2. These will be addressed during the development of the fourth edition of this document.

For IEC 62368-1:2018 certified sub-assemblies/components that are built into ME EQUIPMENT, Clause 7 and Clauses 9 to 15 (inclusive) of this standard are applied as stated. If a requirement in IEC 62368-1:2018 is related to OPERATOR safety and is in conflict with parts of Clause 7 and Clauses 9 to 15 (inclusive), it can be evaluated according to the detailed requirements of 4.5.

In all cases, the requirements for MEANS OF PATIENT PROTECTION (MOPP) in this standard still need to be applied.

~~If the RESIDUAL RISK is greater than the RESIDUAL RISK achieved by applying the requirements of this standard, the ME EQUIPMENT or ME SYSTEM cannot be regarded as complying with this standard, even if the RESIDUAL RISK is fully justified by other considerations such as the clinical benefit to the PATIENT.~~

Subclause 4.6 – ME EQUIPMENT or ME SYSTEM parts that contact the PATIENT

A part that unintentionally comes into contact with an unconscious, anaesthetized or incapacitated PATIENT can present the same RISKS as an APPLIED PART that necessarily has to contact the PATIENT. On the other hand, a part that an active PATIENT could reach out and touch might present no more RISK to that PATIENT than it presents to an OPERATOR.

The definition of APPLIED PART in the first and second editions of this standard failed to address this problem. The second amendment to the second edition extended the definition to include parts that can be brought into contact with the PATIENT, but the new definition continued to cause difficulties.

Since this standard now requires a RISK MANAGEMENT PROCESS to be followed, it is appropriate to use this PROCESS to establish whether such parts should be subject to the requirements for APPLIED PARTS or not.

Copyright International Electrotechnical Commission
Provided by IHS Markit under license with IEC
No reproduction or networking permitted without license from IHS
Not for Resale, 08/26/2020 19:12:41 MDT

The exclusion of marking requirements reflects the majority view of the National Committees that responded to an enquiry on the subject during the development of this edition. It would be confusing to OPERATORS if parts that are not intended to be APPLIED PARTS were marked like APPLIED PARTS.

Parts identified as needing to be subject to the requirements for APPLIED PARTS (except for marking) will typically contact PATIENTS less frequently than APPLIED PARTS, so the benefits of electrical separation from earth would be less. However in some cases, these parts might need to satisfy the requirements for TYPE BF APPLIED PARTS or TYPE CF APPLIED PARTS in order to provide an appropriate level of safety.

Subclause 4.7 – SINGLE FAULT CONDTION for ME EQUIPMENT

The requirement that ME EQUIPMENT is SINGLE FAULT SAFE effectively puts a lower limit on the probability of occurrence of HARM from a HAZARD. If this probability is achieved then the RISK of the HAZARD is acceptable. In all cases where this discussion refers to the SEVERITY or probability of a particular HAZARD, it is intended to refer to the probability or SEVERITY of the HARM resulting from that HAZARD.

SINGLE FAULT SAFE is a concept that flows from the single fault philosophy described in IEC/TR 60513 [12]. SINGLE FAULT SAFE is a characteristic of ME EQUIPMENT that assures BASIC SAFETY during its EXPECTED SERVICE LIFE. For a high SEVERITY HARM, application of a RISK MANAGEMENT PROCESS can conclude that the single fault concept does not achieve an acceptable RISK.

The probability of simultaneous occurrence of two single faults is considered small enough to be negligible, provided that:

a) a single fault causes operation of a protective device (e.g. a fuse, OVER-CURRENT RELEASE, safety catch, etc.) that prevents occurrence of a HAZARD, or

b) a single fault is discovered by an unmistakable and clearly discernible signal that becomes obvious to the OPERATOR, or

c) a single fault is discovered and remedied by periodic inspection and maintenance that is prescribed in the instructions for use. There is a finite probability that a second fault can arise before the next scheduled inspection and maintenance cycle. As with case a) above, for the probability of this double fault condition to be negligible, the probability of each fault has to be low. This means that the frequency of inspection and maintenance has to be high compared to the expected probability of occurrence of the fault. The longer the time that one SINGLE FAULT CONDITION remains present before being detected and rectified, the greater the probability that a second fault will arise. Therefore, the MANUFACTURER might need to explicitly consider the detection time in relation to the occurrence of a possible second fault as part of RISK ANALYSIS.

Non-exclusive examples of the categories a) to c) are:

– REINFORCED or DOUBLE INSULATION;

– CLASS I ME EQUIPMENT in case of a fault in BASIC INSULATION;

– abnormal indications of displays, defect in a redundant suspension cord causing excessive noise or friction;

– deterioration of a flexible PROTECTIVE EARTH CONDUCTOR that is moved in NORMAL USE.

Subclause 4.8 – Components of ME EQUIPMENT

Resistors bridging a MEANS OF PROTECTION

A resistor or group of series connected resistors (two or more), can bridge one or two MEANS OF PROTECTION (MOOP or MOPP), providing the following is observed:

– the resistor or group of resistors has a voltage rating twice the value of the WORKING VOLTAGE across the MEANS OF PROTECTION;

--`,,`,,`-`-`,,`,,`,`,,`---

Copyright International Electrotechnical Commission
Provided by IHS Markit under license with IEC
No reproduction or networking permitted without license from IHS Not for Resale, 08/26/2020 19:12:41 MDT

– the resistor or group of resistors can withstand dielectric strength tests according to 8.8.3 and considering the expected transient voltages that the component(s) will be subjected to during NORMAL USE over the EXPECTED SERVICE LIFE;

– the resistor or group of resistors has a power rating twice that expected in NORMAL USE;

– the resistor or group of resistors have a resistance value such that TOUCH CURRENT, PATIENT LEAKAGE CURRENT and PATIENT AUXILIARY CURRENT requirements are not exceeded;

– the resistor or group of resistors have a construction that maintains the MOP separation requirements for CREEPAGE DISTANCE and AIR CLEARANCE (For a series group, separation at each component is additive making up the required separation.);

– the resistor or group of resistors are constructed such that their inductance is low;

– the resistor or group of resistors have a construction that cannot fail short-circuit; and

– when using a group of resistors they all need have the same resistance value and the voltage and power doubling requirement applies also to each component based on the expected WORKING VOLTAGE across that resistor in NORMAL USE.

Subclause 4.9 – Use of COMPONENTS WITH HIGH-INTEGRITY CHARACTERISITCS in ME EQUIPMENT

The first step to determine a COMPONENT WITH HIGH-INTEGRITY CHARACTERISTICS is to conduct a RISK ANALYSIS to find those characteristics that are required to maintain BASIC SAFETY or ESSENTIAL PERFORMANCE. Having done this, the appropriate component can be selected. Reference can be made to IEC component standards as part of the determination of the characteristics required.

TYPE TESTS of COMPONENTS WITH HIGH-INTEGRITY CHARACTERISTICS are only part of the required determination of suitability. Since a particular COMPONENT WITH HIGH-INTEGRITY CHARACTERISTICS has to function as intended or a HAZARD is likely to occur, additional considerations include as appropriate:

– continuous surveillance as part of the manufacturing PROCESS and also after assembly into the end product;

– particular characteristics of the device concerned;

– lot testing;

– calibration;

– control of manufacturing defects;

– maintenance;

– EXPECTED SERVICE LIFE of equipment;

– use of relevant component standards;

– failure mode characteristics;

– environmental conditions;

– anticipated misuse of equipment;

– interaction with other equipment.

Subclause 4.10 – Power supply

An alternating voltage is considered in practice to be sinusoidal if any instantaneous value of the waveform concerned differs from the instantaneous value of the ideal waveform at the same moment by no more than ± 5 % of the peak value of the ideal waveform.

A polyphase voltage system is considered to be symmetrical if neither the magnitude of its negative sequence components nor the magnitude of its zero sequence components exceeds 2 % of the magnitude of its positive sequence components.

A polyphase supply system is considered to be symmetrical if, when supplied from a symmetrical voltage system, the resulting current system is symmetrical. That is, the magnitude of neither the negative sequence current components nor the zero sequence

Copyright International Electrotechnical Commission
Provided by IHS Markit under license with IEC
No reproduction or networking permitted without license from IHS Not for Resale, 08/26/2020 19:12:41 MDT

current components exceeds 5 % of the magnitude of the positive sequence current components.

Clause 5 – General requirements for testing ME EQUIPMENT

In ME EQUIPMENT there could be many pieces of insulation, components (electrical and mechanical) and constructional features in which a failure would not produce a HAZARD to PATIENT, OPERATOR or surroundings, even though causing a deterioration in or a failure of performance of ME EQUIPMENT.

Subclause 5.1 – TYPE TESTS

The RISK MANAGEMENT PROCESS identifies the RISK CONTROL measures that are necessary to ensure that the ME EQUIPMENT is safe.

Unless otherwise specified in this standard, tests should not be repeated. This applies particularly to the dielectric strength tests, which are performed only at the MANUFACTURER'S site or in test laboratories.

In order to ensure that every individually produced item of ME EQUIPMENT conforms to this standard, the MANUFACTURER or installer should carry out such measures during manufacture or installation assembly as to ensure that each item satisfies all requirements even if it is not completely tested individually during manufacture or installation.

Such measures could take the form of:

a) production methods (to ensure good manufacturing output and constant quality) where such quality would be related to safety;

b) production tests (routine tests) performed on every produced item;

c) production tests performed on a production sample where results would justify a sufficient confidence level.

Production tests need not be identical with TYPE TESTS, but can be adapted to manufacturing conditions and possibly invoking less RISK for the quality of the insulation or other characteristics important for BASIC SAFETY and ESSENTIAL PERFORMANCE.

Production tests would, of course, be restricted to settings (possibly derived from TYPE TESTS) that would provoke the worst case situation.

Depending upon the nature of ME EQUIPMENT, production methods or tests could concern critical insulation of the MAINS PART, of the PATIENT CONNECTIONS and the insulation or the separation between these parts.

Suggested test parameters could be LEAKAGE CURRENT and dielectric strength.

When applicable, the continuity of protective earthing can be a major test parameter.

Guidance on general testing procedures that can be used with this standard is given in IEC/TR 62354 [66].

This standard uses several terms to describe fault conditions that could be encountered. They are:

SINGLE FAULT CONDITION

The SINGLE FAULT CONDITION is defined in 3.116 to describe those conditions where "a single means for reducing a RISK is defective" or "a single abnormal condition is present". Possible SINGLE FAULT CONDITIONS are listed in this standard and can affect verifiable values like CREEPAGE DISTANCES, protective earth path impedances, LEAKAGE CURRENTS, etc.

Copyright International Electrotechnical Commission
Provided by IHS Markit under license with IEC
No reproduction or networking permitted without license from IHS Not for Resale, 08/26/2020 19:12:41 MDT

Faults not leading to a SINGLE FAULT CONDITION

Compared with SINGLE FAULT CONDITIONS, this standard does not have verifiable requirements for faults not leading to a SINGLE FAULT CONDITION. This means this standard does not give guidance how reliable it is that faults can be prevented.

Combination of simultaneous independent faults

Because there are no reliable verifiable requirements defined in this standard for the prevention of faults, all possible simultaneous faults should be considered in accordance with 4.7.

Where a SINGLE FAULT CONDITION remains undetected (e.g. bridging of one MEANS OF OPERATOR PROTECTION), further simultaneous faults should be considered in accordance with 4.7.

NOTE For additional guidance, see IEC 60513:1994.

The worst cases of simultaneous faults are those which lead to most dangerous results. The wording of the standard is used to avoid conducting all possible simultaneous fault tests, because many of them could be covered by worst case testing.

Subclause 5.2 – Number of samples

The TYPE TEST sample or samples need to be representative of the units intended for the RESPONSIBLE ORGANIZATION.

Subclause 5.7 – Humidity preconditioning treatment

According to IEC 60529, the ENCLOSURE of ME EQUIPMENT that is RATED IPX8 prevents, under stated conditions, the entry of an amount of water where its presence could result in a HAZARD.

The test condition as well as the acceptable amount and location of water are to be defined in particular standards. If no ingress of water is tolerated (sealed ENCLOSURES) the application of the humidity preconditioning treatment is inappropriate.

Parts sensitive to humidity, normally used in controlled environments and which do not influence ~~safety~~ BASIC SAFETY and ESSENTIAL PERFORMANCE, need not be subjected to this test. Examples are: high-density storage media in computer-based systems, disc and tape drives, etc.

To prevent condensation when ME EQUIPMENT is placed in the humidity cabinet, the temperature of such a cabinet should be equal to or slightly lower than the temperature of the ME EQUIPMENT when it is introduced. To avoid the need for a temperature stabilization system for the air in the room outside the cabinet, the cabinet air temperature during the treatment is adapted to that of the outside air within the limits of the range of +20 °C to +32 °C and then "stabilized" at the initial value. Although the effect of the cabinet temperature on the degree of absorption of humidity is recognized, it is felt that the reproducibility of test results is not impaired substantially and the cost-reducing effect is considerable.

Subclause 5.9 – Determination of APPLIED PARTS and ACCESSIBLE PARTS

Except in special cases, such as PATIENT supports and waterbeds, contact with ME EQUIPMENT is supposed to be made with:

– one hand, simulated for LEAKAGE CURRENT measurements by a metal foil of 10 cm x 20 cm (or less if the total ME EQUIPMENT is smaller);

– one finger, straight or bent in a natural position, simulated by a test finger provided with a stop plate;

– an edge or slit that can be pulled outwards allowing subsequent entry of a finger, simulated by a combination of test hook and test finger.

Copyright International Electrotechnical Commission
Provided by IHS Markit under license with IEC
No reproduction or networking permitted without license from IHS Not for Resale, 08/26/2020 19:12:41 MDT

Subclause 5.9.2.1 – Test finger

An ACCESS COVER is a part of the ENCLOSURE that can be removed in order to allow access to parts of electrical equipment for purposes of adjustment, inspection, replacement or repair. It is presumed that parts that can be removed without the use of a TOOL are intended to be replaced by any OPERATOR, not only by SERVICE PERSONNEL, even if this is not described in the instructions for use. OPERATORS other than SERVICE PERSONNEL might not be as well trained or experienced in good safety practices as SERVICE PERSONNEL. Therefore, extra safety precautions are needed to prevent accidental contact with hazardous voltages. That is why parts such as lamps, fuses, and fuseholders that can be removed without the use of a TOOL are to be removed before determining which parts inside the ACCESS COVER are to be considered ACCESSIBLE PARTS.

Fuseholders where the fuselink is held in a cap that can be removed without use of a TOOL are a special concern. If the fuselink does not come out when the cap is removed, the OPERATOR could be inclined to try to remove it by gripping the end of the fuselink with the fingers. The OPERATOR could try to insert a new fuselink into the fuseholder without first inserting it in the cap. Both cases can be considered reasonably foreseeable misuse. This should be taken intoconsideration with assessing what parts are accessible.

The reader is referred to IEC 60127-6 [7] for more information on fuseholders.

Clause 6 – Classification of ME EQUIPMENT and ME SYSTEMS

ME EQUIPMENT can have a multiple classification.

Subclause 6.2 – Protection against electric shock

The term “Class III equipment” is used in some other standards to identify equipment that is powered from a safety extra-low voltage (SELV) mains supply system. The term Class III equipment is not formally used in this standard. The BASIC SAFETY of Class III equipment is critically dependent on the installation and on other Class III equipment connected thereto. These factors are outside the control of the OPERATOR and this is considered to be unacceptable for ME EQUIPMENT. Additionally, limitation of voltage is not sufficient to ensure safety of the PATIENT. For these reasons, this standard does not recognize Class III construction.

~~**Subclause 6.3 – Protection against harmful ingress of water or particulate matter**~~

~~It should be noted that compliance with the requirements of this standard automatically allows MANUFACTURERS to rate ME EQUIPMENT as IP2X because the requirements of IEC 60529 for this rating are the same as the accessibility requirements (see 5.9).~~

Subclause 6.6 – Mode of operation

CONTINUOUS OPERATION and non-CONTINUOUS OPERATION cover the range of operating modes of virtually all equipment. ME EQUIPMENT that remains plugged into the SUPPLY MAINS continuously but is operated intermittently should be RATED for non-CONTINUOUS OPERATION, have the appropriate indication of on/off times in the ACCOMPANYING DOCUMENTS and markings on the ME EQUIPMENT (see 7.2.11).

Subclause 7.1.1 – USABILITY of the identification, marking and documents

For ME EQUIPMENT to be well designed, its markings and ACCOMPANYING DOCUMENTS should be clear, consistent, and help to reduce potential use error. Thus, markings and ACCOMPANYING DOCUMENTS should undergo the same rigorous evaluation as other OPERATOR-ME EQUIPMENT interface elements.

Copyright International Electrotechnical Commission
Provided by IHS Markit under license with IEC
No reproduction or networking permitted without license from IHS
Not for Resale, 08/26/2020 19:12:41 MDT

Subclause 7.1.2 – Legibility of markings

Markings on ME EQUIPMENT are expected to be CLEARLY LEGIBLE by an OPERATOR over the range of normal illumination levels where the ME EQUIPMENT is typically operated. The levels used in this test are derived from the following recommended illumination levels for use in interior lighting design [51]:

– 100 lx to 200 lx is recommended for working spaces where visual tasks are performed only occasionally;

– 500 lx to 1000 lx is recommended for visual tasks of small size or reading medium-pencil handwriting;

– 1 000 lx to 2 000 lx is recommended for visual tasks of low contrast or very small size: e.g. reading handwriting in hard-pencil on poor-quality paper.

If markings are not legible to the OPERATOR under the expected conditions of use, there would be an unacceptable RISK.

The Minimum Angle of Resolution (MAR) is a visual acuity measurement method developed as an improvement on the long-used Snellen scale. The values are express as a logarithm of the Minimum Angle of Resolution. Log MAR can be calculated from the Snellen scale, i.e. log MAR = log(6/6) = 0 for normal vision.

The Jaeger test card is used for determining near vision. N6 corresponds to reading at a distance of 0,87 m from the face.

An ambient light level of 500 lx is recommended for conducting the visual acuity examination.

If a recommended minimum font size is to be considered, then a readable font size is a function of reading distance and the resulting visual angle of the marking image presented to the retina of the eye. Calculations of visual angle in minutes of arc are found in ANSI/AAMI HE-75:2009 [71], subclause 6.2.2.6.5, Table 6.2. Using a minimal acceptable visual angle of 12 minutes of arc, a font size of 9 would be recommended for a reading distance of one meter and a font size of 6 for a typical reading distance of 0,7 m.

Subclause 7.1.3 – Durability of markings

The rubbing test is performed with distilled water, ~~methylated spirits~~ ethanol 96 % and isopropyl alcohol.

Ethanol 96% is defined in the European Pharmacopoeia as a reagent in the following terms: C_2H_6O (MW46.07).

Isopropyl alcohol is defined in the European Pharmacopoeia as a reagent in the following terms: C_3H_8O (MW60.1).

Subclause 7.2.2 – Identification

This subclause is intended to apply to any detachable component when misidentification could ~~present a HAZARD~~ result in a HAZARDOUS SITUATION. For examples, normal consumables would probably need to be identified, but a cosmetic cover would not need to be identified.

Although a MODEL OR TYPE REFERENCE usually denotes a certain performance specification, it might not denote the exact construction, including the applied components and materials. ~~If this is required,~~ The MODEL OR TYPE REFERENCE ~~can be~~ is supplemented by a serial number or lot or batch identifier. The serial number or lot or batch identifier can be used for other purposes such as providing traceability in case the MANUFACTURER needs to take a corrective action.

~~Indication of a manufacturing series only might not be sufficient if local requirements require individual identification.~~

--`,,```,,,,````-`-`,,`,,`,`,,`---

Copyright International Electrotechnical Commission
Provided by IHS Markit under license with IEC
No reproduction or networking permitted without license from IHS Not for Resale, 08/26/2020 19:12:41 MDT

It is characteristic of software that different versions can run on a PEMS. The identification of the software will often be on the user interface, although this might not be possible e.g. where the software does not have a user interface. Identification of the software could need special tools. For this reason, the requirement permits the identification to be only available to designated people.

Subclause 7.2.3 – Consult ACCOMPANYING DOCUMENTS

~~It is not intended in every case when the instructions for use contain warnings, that the ME EQUIPMENT be marked with ISO 7010-M002 (see Table D.2, safety sign 10). Too many warnings and unnecessary warnings are counterproductive. Only when the MANUFACTURER, as a RISK CONTROL measure for a specific RISK, decides to mark the ME EQUIPMENT to instruct the OPERATOR to read the instructions for use, should safety sign ISO 7010-M002 be used.~~

During the RISK MANAGEMENT PROCESS of a ME EQUIPMENT, if the MANUFACTURER determines that reading information within the instructions for use is a mandatory action necessary to control a specific RISK to an acceptable level, then the SAFETY SIGN ISO 7010-M002 (2011-05) (see Table D.2, SAFETY SIGN 10) notifies the OPERATOR of that need. In other words, if the means for an OPERATOR to avoid a specific and unacceptable RISK is only reading (and understanding) the instructions for use, then the SAFETY SIGN is required. If the OPERATOR does not read (and understand) those instructions for use, the RISK CONTROL is ineffective and there is an unacceptable RISK.

The SAFETY SIGN ISO 7010-M002 should not be used for indicating that it is a mandatory action to read the instructions for use for the disclosure of RESIDUAL RISK.

The MANUFACTURER should use the USABILITY ENGINEERING PROCESS to determine whether or not using SAFETY SIGN ISO 7010-M002 as an effective means to control RISK to an acceptable level. The SAFETY SIGN should be placed in a location that is visible from the intended position of the OPERATOR.

It is not intended in every case when the instructions for use contain warnings, that the ME EQUIPMENT be marked with ISO 7010-M002 (i.e. instructions for use are not used as the primary RISK CONTROL measure). Symbol ISO 7000-1641 (2004-01) (see Table D.1, symbol 11) is used to indicate that the instructions for use should be considered when operating the ME EQUIPMENT. The symbol should be placed in a location close to a control needing reference to the instructions for use. This symbol can also be used to identify the location where the instructions for use is stored.

Subclause 7.2.4 – ACCESSORIES

RESPONSIBLE ORGANIZATIONS and OPERATORS need to be able to identify ACCESSORIES in order to know which ones can be used without impairing BASIC SAFETY or ESSENTIAL PERFORMANCE. A MODEL OR TYPE REFERENCE alone is not sufficient, because different MANUFACTURERS might use the same number. The name marked on the ACCESSORY could be that of the ME EQUIPMENT MANUFACTURER or a different name.

Subclause 7.2.10 – APPLIED PARTS

According to the second edition of this standard, the marking could be either on the APPLIED PART itself or adjacent to the connection point. Neither location is satisfactory in all cases.

Where a conductor that is not separated from PATIENT CONNECTIONS extends up to the point inside ME EQUIPMENT where an isolation barrier exists, a TYPE BF or TYPE CF marking on the APPLIED PART itself could mislead the RESPONSIBLE ORGANIZATION or the OPERATOR into believing that isolation is built into the APPLIED PART itself. If, on the other hand, the classification depends on the particular APPLIED PART in use, a single marking on the connection point would be inaccurate and multiple marking would be confusing.

For DEFIBRILLATION-PROOF APPLIED PARTS, if protection against the effect of the discharge of a cardiac defibrillator is partly in the PATIENT cable, a warning to the OPERATOR is necessary

--`,,```,,,,````-`-`,,`,,`,`,,`---

Copyright International Electrotechnical Commission
Provided by IHS Markit under license with IEC
No reproduction or networking permitted without license from IHS Not for Resale, 08/26/2020 19:12:41 MDT

because there ~~are~~ can be non-obvious ~~HAZARDS~~ HAZARDOUS SITUATIONS if the wrong cable is used. ~~HAZARDS~~ These HAZARDOUS SITUATIONS can include decreasing the defibrillation energy delivered to the PATIENT, damage to the ME EQUIPMENT with consequent loss of ESSENTIAL PERFORMANCE, or electric shock to the OPERATOR or other persons.

Subclause 7.2.12 – Fuses

Examples of marking for fuses complying with IEC 60127-1 are:

– T 315L, 250V
– T 315mAL, 250V
– F 1,25H, 250V
– F 1,25AH, 250V

The operating speed can be marked by the letter or colour codes in IEC 60127-1, which are as follows:

– very quick acting: FF, or black
– quick acting: F, or red
– medium time lag: M, or yellow
– time lag: T, or blue
– long time lag: TT, or grey

Subclause 7.2.21 – Mass of MOBILE ME EQUIPMENT

MOBILE ME EQUIPMENT is intended to be transported from one location to another by its own wheels or equivalent means. For safety, it is important that the OPERATOR be aware of the total mass of the ME EQUIPMENT with its SAFE WORKING LOAD installed. This is important when moving the ME EQUIPMENT, and, for heavy ME EQUIPMENT, understanding any limitations on locations where the ME EQUIPMENT can be taken. The ME EQUIPMENT can have bins, shelves or drawers that might have their own maximum loading requirements. The marking on the ME EQUIPMENT needs to be sufficiently separate and distinct from any markings on the bins, shelves or draws to avoid confusing the OPERATOR as to what the marking applies.

Subclause 7.3.2 – HIGH VOLTAGE parts

HIGH VOLTAGE parts present a significant electric shock HAZARD to SERVICE PERSONNEL and others who could be required to work inside the ME EQUIPMENT while it is energized. Because the parts are inside the ENCLOSURE, the RISK is perceived to be substantially less than that for HIGH VOTAGE TERMINAL DEVICES located on the outside of the ME EQUIPMENT. Therefore, the "dangerous voltage" symbol (IEC 60417-5036) (~~DB:~~2002-10) (see Table D.1, symbol 24) is permitted as a marking to alert SERVICE PERSONNEL and others to the potential presence of these dangerous voltages. The MANUFACTURER is permitted to use ~~a safety sign 3~~ ISO 7010-W012 (see Table D.2. SAFETY SIGN 3). The RISK MANAGEMENT PROCESS could determine that the ~~safety sign~~ SAFETY SIGN is the most appropriate choice if the personnel exposed to the HAZARD have minimal training or might otherwise be unaware that HIGH VOLTAGE is present.

Subclause 7.3.4 – Fuses, THERMAL CUT-OUTS and OVER-CURRENT RELEASES

See the rationale for 7.2.12.

Subclause 7.3.5 – PROTECTIVE EARTH TERMINALS

This standard does not require marking of terminals for internal PROTECTIVE EARTH CONNECTIONS, but does not preclude it.

Copyright International Electrotechnical Commission
Provided by IHS Markit under license with IEC
No reproduction or networking permitted without license from IHS
Not for Resale, 08/26/2020 19:12:41 MDT

Subclause 7.4.1 – Power switches

If a marking is used for a toggle-type switch, the symbols for "on" (|) and "off" (◯) [symbols 12 and 13 from Table D.1] should be used to indicate its ON and OFF positions.

For a push-button type switch, the appropriate marking will depend on the type of switch. For a push button switch with bistable positions, the symbol (⏽) [symbol 14 from Table D.1] should be used to indicate that both the ON and OFF positions are stable.

For a push button switch with a momentary ON position, the symbol (⏾) [symbol 15 from Table D.1] should be used to indicate that mains power is applied for only as long as the push button is depressed. As soon as the button is released the switch returns to the stable OFF position.

Subclause 7.4.2 – Control devices

The different positions of switches that control the functionality of the ME EQUIPMENT or a part of the ME EQUIPMENT, but do not control mains power to the ME EQUIPMENT or a part of the ME EQUIPMENT should also be marked in such a way as to clearly indicate the state of the control function. Any appropriate means including figures, letters, indicator lights, etc. can be used. If the marking includes symbols, the symbols for "on" for part of the equipment (⊙) and "off" for part of the equipment (◯) [symbols 16 and 17 from Table D.1] can be used to indicate its ON and OFF positions.

A switch or switch position by means of which the ME EQUIPMENT or part of the ME EQUIPMENT is switched on in order to bring it into the "stand-by" condition can be indicated by the stand-by symbol (⏻) [symbol 29 from Table D.1]. This symbol is required by IEC 60950-1:2005 to indicate the stand-by mode of the information technology equipment covered by that standard.

Subclause 7.8 – Indicator lights and controls

For colours of indicator lights see also IEC 60073 [5].

Colour alone should not be used to convey important information. A redundant means of conveying information such as shape, location, sound or marking is recommended.

INFORMATION SIGNALS, such as a waveform or a parameter numeric, are allowed to use any colour, including red, yellow, cyan, and green, as long as they are correctly perceived as different from HIGH, MEDIUM and LOW PRIORITY alarm indicator lights and as different from red, yellow, and green indicator lights.

Subclause 7.8.1 – Colour of indicator lights

It is important to distinguish HIGH PRIORITY, MEDIUM PRIORITY and LOW PRIORITY ALARM SIGNALS from the warning and caution signals. A warning signal, a steady (constant, non-flashing) red light, and the caution signal, a steady (constant, non-flashing) yellow light, are to be used for conditions that are present in NORMAL USE. The warning signal alerts the OPERATOR to a HAZARDOUS SITUATION that can cause death or serious injury. The caution signal alerts the OPERATOR to a HAZARDOUS SITUATION that can cause minor or moderate injury or ME EQUIPMENT damage. Thus, these signals are akin to SAFETY SIGNS or markings that indicate warnings and cautions at all times. Typically, these indicator lights would be accompanied by natural language that explains the HAZARD or a HAZARDOUS SITUATION. An example might be a warning or caution light to signify a hot surface that should not be touched, or the danger of opening a door and risking exposure to radiation. In these examples, the hot surface and the radiation are expected to be present during NORMAL USE. Warning and caution lights do not require OPERATOR action (as a HIGH PRIORITY or MEDIUM PRIORITY ALARM SIGNAL requires), and they do not require a change in workflow; they merely require awareness. Furthermore, warning and

Copyright International Electrotechnical Commission
Provided by IHS Markit under license with IEC
No reproduction or networking permitted without license from IHS
Not for Resale, 08/26/2020 19:12:41 MDT

caution lights are considered INFORMATION SIGNALS and are not accompanied by ALARM SIGNALS.

On the other hand, HIGH PRIORITY ALARM SIGNALS can include an alarm indicator light (a flashing red light as opposed to a steady red light) and can be accompanied by an appropriate auditory ALARM SIGNAL. Similarly, a MEDIUM PRIORITY ALARM SIGNAL can include an alarm indicator light (a flashing yellow light as opposed to a steady yellow light) and can be accompanied by an appropriate auditory ALARM SIGNAL. In either case, OPERATOR action and changes in workflow are required.

Subclause 7.9.1 – General

It is important that ME EQUIPMENT or an ME SYSTEM is not unintentionally used in an application for which it is not intended by its MANUFACTURER.

The USABILITY ENGINEERING PROCESS requires the MANUFACTURER to develop an applications specification that includes the intended environments of use. The MANUFACTURER is required to supply a summary of this specification in the ACCOMPANYING DOCUMENTS. See 12.2.

Subclause 7.9.2.1 – General

RESPONSIBLE ORGANIZATIONS and OPERATORS frequently deal with many different types of ME EQUIPMENT. Because of the complexity of modern ME EQUIPMENT, the instructions for use are an important part of the ME EQUIPMENT. Some commonality in the structure for the instructions for use could help OPERATORS to find needed material quickly and easily. However, because of the diversity of ME EQUIPMENT covered by this standard, no one format will be equally applicable to all ME EQUIPMENT. ~~Therefore, the MANUFACTURER is encouraged, but not required, to use the sequence of topics in 7.9.2.2 to 7.9.2.16 as an outline when developing the instructions for use.~~

When considering if the PATIENT can act as an OPERATOR, the MANUFACTURER needs to take into account that the level of protection provided by this standard for the OPERATOR can be different from that for the PATIENT. For example, acceptable LEAKAGE CURRENT levels and accessible voltages values are higher for the OPERATOR than they are for the PATIENT. Instead of PATIENT LEAKAGE CURRENT, TOUCH CURRENT could be applied. Additionally the OPERATOR can have access to voltages up to 42,4 V peak a.c. or 60 V d.c.

Other conditions to consider include:

– Is the ME EQUIPMENT to be used under medical supervision or guidance?
– What is the health condition of the PATIENT?
– What treatment is being provided to the PATIENT?
– Are there special USABILITY considerations (see IEC 60601-1-6)?
– Is the ME EQUIPMENT to be used in the professional healthcare environment, the home healthcare environment (see IEC 60601-1-11 [55]) or the emergency medical service environment (see IEC 60601-1-12 [58])?
– Does the PATIENT have access to the instructions for use?
– Is adequate training of the PATIENT as an OPERATOR available?

The problem of languages used in markings and in ACCOMPANYING DOCUMENTS cannot be solved by IEC. Even a requirement that identifications and ACCOMPANYING DOCUMENTS have to be in the national languages cannot be upheld world-wide.

Subclause 7.9.2.2 – Warning and safety notices

For CLASS I ME EQUIPMENT, where operation from either a SUPPLY MAINS or an INTERNAL ELECTRICAL POWER SOURCE is specified, the instructions for use should state that the INTERNAL ELECTRICAL POWER SOURCE is to be used if the integrity of the PROTECTIVE EARTH CONDUCTOR or the protective earthing system in the installation is in doubt.

--`,,```,,,,`,,`,`,,,,,,,,,`,,`,,`,,`,,`,,---

Copyright International Electrotechnical Commission
Provided by IHS Markit under license with IEC
No reproduction or networking permitted without license from IHS Not for Resale, 08/26/2020 19:12:41 MDT

Subclause 7.9.2.6 – Installation

The instructions for use can contain a statement saying that the MANUFACTURER, assembler, installer or importer considers himself responsible for the effect on BASIC SAFETY, reliability and performance of the ME EQUIPMENT or ME SYSTEM only if:

– appropriately trained personnel carry out assembly operations, extensions, readjustments, modifications or repairs;

– the electrical installation of the relevant room complies with the appropriate requirements; and

– the ME EQUIPMENT or ME SYSTEM is used in accordance with the instructions for use.

Subclause 7.9.2.7 – Isolation from the SUPPLY MAINS

A plug and socket provide suitable means for isolation from the SUPPLY MAINS to satisfy 8.11.1 a), but they would not be suitable if they were not readily accessible when needed.

Subclause 7.9.2.19 – Unique version identifier

MANUFACTURERS frequently issue multiple revisions of the instructions for use. RESPONSIBLE ORGANIZATIONS and OPERATORS need to be able to determine if the instructions for use they have are current. This is particularly important when dealing with PEMS software that can be updated in the environment of use. Providing a date of issuance is a widely accepted method for identifying versions of a document. The MANUFACTURER decides what level of detail is appropriate with month and year being common for printed material. However, greater granularity might be required, particularly for material distributed electronically. The MANUFACTURER could include a revision number when appropriate.

Subclause 7.9.3.1 – General

According to the INTENDED USE of ME EQUIPMENT, the MANUFACTURER should specify the permissible environmental conditions for which a HAZARD is not induced. Environmental conditions such as the following are expected to be considered:

– the effect of humidity;

– the effect of temperature;

– the effect of atmospheric pressure;

– the effect of shock and vibration;

– the effect of ultra-violet radiation.

– the effect of the temperature of the water for water cooled ME EQUIPMENT;

– the effect of pollution.

Accuracy and precision are not possible to define in this standard. These concepts have to be addressed in particular standards.

The values listed below were used in the second edition of IEC 60601-1 to describe the range of environmental conditions over which ME EQUIPMENT was required to be safe.

a) an ambient temperature range of + 10 °C to + 40 °C;

b) a relative humidity range of 30 % to 75 %;

c) an atmospheric pressure range of 70,0 kPa to 106,0 kPa;

d) a temperature of the water at the inlet of water-cooled ME EQUIPMENT not higher than 25 °C.

These environmental conditions were based on the conditions in buildings without air-conditioning in climates where the ambient temperature occasionally reaches + 40 °C.

--`,,```,,,,````-`-`,,`,,`,`,,`---
Copyright International Electrotechnical Commission
Provided by IHS Markit under license with IEC
No reproduction or networking permitted without license from IHS
Not for Resale, 08/26/2020 19:12:41 MDT

In the second edition of IEC 60601-1, the ME EQUIPMENT had to be safe when operated under the above conditions but it only needed to be fully operable under conditions specified by the MANUFACTURER in the ACCOMPANYING DOCUMENTS.

This edition specifies particular environmental conditions for some requirements and tests. Where this is not the case, ME EQUIPMENT has to remain safe and operate correctly over the range of environmental conditions specified by the MANUFACTURER in the ACCOMPANYING DOCUMENTS.

Attention is drawn to the fact that there was always a problem to apply a 40 °C environmental condition to a ME EQUIPMENT in cases where the APPLIED PART needed to operate at temperatures close to the 41 °C limit.

The second edition of IEC 60601-1 specified the following range of environmental conditions for transport and storage of ME EQUIPMENT unless otherwise specified by the MANUFACTURER:

– an ambient temperature range of - 40 °C to + 70 °C;
– a relative humidity range of 10 % to 100 %, including condensation;
– an atmospheric pressure range of 50 kPa to 106 kPa.

Amendment 2 to the second edition replaced the above list with a requirement that the MANUFACTURER state the permissible transport and storage conditions. However, in the absence of other information, the above list can serve as a useful starting point in determining the permissible limits.

Information on environmental parameters and a limited number of their severities within the range of conditions met by electrotechnical products when being transported, stored, installed and used can be found in the IEC 60721 series [18].

For PERMANENTLY INSTALLED high power ME EQUIPMENT, it might be necessary to control the voltage drop in the customer installation to prevent input voltage getting below the minimum normal voltage due to local conditions. Control can be done by specifying the required apparent impedance of the SUPPLY MAINS.

Subclause 7.9.3.4 – Mains isolation

SERVICE PERSONNEL need to know how to isolate the ME EQUIPMENT from the SUPPLY MAINS. This is not always obvious, particularly if there is a switch in the MAINS PART that does not meet the requirements of 8.11.

Clause 8 – Protection against electrical HAZARDS from ME EQUIPMENT

The fundamental principle for protection against electric shock is that the voltage or current between any accessible surface and any other accessible surface or earth is low enough not to ~~present a HAZARD~~ result in a HAZARDOUS SITUATION, in all relevant circumstances including NORMAL CONDITION and SINGLE FAULT CONDITION.

Requirements for achieving protection have been formulated in various ways in IEC basic safety standards, in previous editions of this standard, and in other IEC product standards.

In order for the fundamental principle to be satisfied:

a) parts that are “live” (as defined in the second edition of this standard) or “hazardous live” (as defined in some other standards, such as IEC 61140 [23] and IEC 61010-1 [22]) have to be inaccessible (but see below regarding problems in identifying what is “live”) and

b) ACCESSIBLE PARTS ~~including~~ and APPLIED PARTS have to be not “live” / “hazardous live.”

NOTE The term “live” was defined in the second edition of this standard as, “State of a part which, when connection is made to that part, can cause a current exceeding the allowable LEAKAGE CURRENT (specified in Subclause 19.3) for the part concerned to flow from that part to earth or from that part to an ACCESSIBLE PART of the same EQUIPMENT.

These two requirements are in principle equivalent but some standards state both of them.

Copyright International Electrotechnical Commission
Provided by IHS Markit under license with IEC
No reproduction or networking permitted without license from IHS Not for Resale, 08/26/2020 19:12:41 MDT

These requirements in turn imply that:

c) ACCESSIBLE PARTS ~~including~~ and APPLIED PARTS have to be separated from certain internal live parts: in general two separate MEANS OF PROTECTION are necessary, one to provide separation in NORMAL CONDITION and a second to maintain BASIC SAFETY in SINGLE FAULT CONDITION, and

d) LEAKAGE CURRENTS (and possibly also voltages and energies) have to be below acceptable limits.

Most standards include explicit requirements covering each of these aspects of providing protection. For example the first and second editions of this standard dealt with a) in Clause 16, with b) and d) in Clause 19 and with c) in Clauses 17, 18 and 20.

Requirement a) has typically been formulated as a requirement for the provision of ENCLOSURES or barriers to prevent contact with internal hazardous live parts. However it can alternatively be formulated in terms of the determination of which parts are accessible. Anyway the adequacy of ENCLOSURES or barriers is determined by use of the relevant test fingers and probes.

Application of the above approach to ME EQUIPMENT has presented some difficulties. The limits for voltage and current depend on how, if at all, the part(s) concerned can be connected to a PATIENT, e.g. directly to the heart, directly to other parts of the body, or indirectly via the OPERATOR. This has led to difficulties in identifying which parts are “live” parts.

The definition of “live” in the second edition of this standard refers to the allowable LEAKAGE CURRENT. The definition is therefore difficult to apply to internal parts for which no particular LEAKAGE CURRENT limits are specified.

Certain parts could be regarded as “live” (within the definition of the second edition of this standard) for some purposes and at the same time as not “live” for other purposes. For example an internal part that can source a current of, say, 200 μA has to be separated from all ACCESSIBLE PARTS, including PATIENT CONNECTIONS in NORMAL CONDITION.

The separation from PATIENT CONNECTIONS of TYPE CF APPLIED PARTS has to remain effective in SINGLE FAULT CONDITION, because a current of 200 μA from these is not permissible. The same part can however become connected to other ACCESSIBLE PARTS and PATIENT CONNECTIONS in SINGLE FAULT CONDITION.

Thus two MEANS OF PROTECTION (DOUBLE INSULATION or REINFORCED INSULATION) would be needed between such a part and the PATIENT CONNECTIONS of TYPE CF APPLIED PARTS, but a single MEANS OF PROTECTION (such as BASIC INSULATION alone) would be acceptable between such a part and other ACCESSIBLE PART.

Furthermore, requirements that specify the necessary separation between parts that are accessible and parts that are “live” do not easily take account of parts that are not “live” but can become “live,” such as the parts of a floating circuit that become “live” when a connection is made to another part of the same circuit.

Consider, for example, the simple situation shown in Figure A.10.

--`,,```,,,,````-`-`,,`,,`,`,,`---

Copyright International Electrotechnical Commission
Provided by IHS Markit under license with IEC
No reproduction or networking permitted without license from IHS Not for Resale, 08/26/2020 19:12:41 MDT

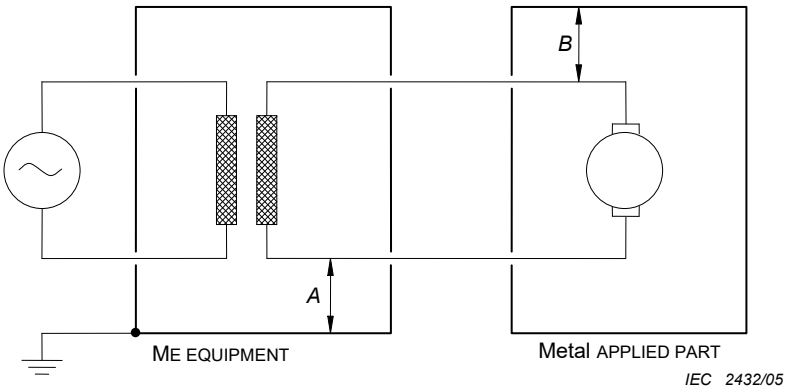

Figure A.10 – Floating circuit

The APPLIED PART has a metal ENCLOSURE that is not PROTECTIVELY EARTHED. If there is a direct connection at point A, then the other end of the SECONDARY CIRCUIT is "live," and even the first edition of this standard would have required DOUBLE INSULATION or REINFORCED INSULATION at point B.

If, instead, there is a direct connection at point B, the first edition would have required only BASIC INSULATION at point A; but this was dealt with in the second edition by adding Subclause 20.2 B-e, which requires DOUBLE INSULATION or REINFORCED INSULATION at point A.

If however there is some insulation at both points A and B, then no part of the SECONDARY CIRCUIT is "live" according to the definition in the second edition, so the second edition of this standard specifies no requirements for that insulation, which can therefore be minimal. The German National Committee of the IEC discovered this problem in 1993, unfortunately just too late for it to be dealt with in the second (and final) amendment to the second edition of this standard. The approach adopted in this edition is intended to overcome this problem.

The formulation proposed for the third edition of this standard is to specify:

1) how to determine which parts are to be regarded as ACCESSIBLE PARTS (by inspection and where necessary by the use of appropriate test probes and fingers);
2) the permissible limits for voltage/current/energy in NORMAL CONDITION and relevant SINGLE FAULT CONDITIONS; these limits depend on the possible circumstances of connection to a PATIENT or to an OPERATOR;
3) that NORMAL CONDITION includes short circuit of any insulation, AIR CLEARANCE or CREEPAGE DISTANCE or impedance which does not comply with specified requirements for the relevant WORKING VOLTAGE, and open circuit of any earth connection which does not comply with the requirements for PROTECTIVE EARTH CONNECTIONS; and
4) that SINGLE FAULT CONDITIONS include short circuit of any insulation, AIR CLEARANCE or CREEPAGE DISTANCE which does comply with specified requirements for the relevant WORKING VOLTAGE, short circuit of any relevant component, and open circuit of any earth connection which does comply with the requirements for PROTECTIVE EARTH CONNECTIONS.

This approach avoids the need to include explicit separate requirements for particular protective means, as specified in existing IEC standards. Arguably it could avoid even a general requirement for two MEANS OF PROTECTION, as presently specified, but the working group considered that such a requirement is desirable.

Where requirements from the second edition that used the defined term "live" have been retained, they have been re-phrased so as not to use this term.

Generally, protection is obtained by a combination of:

– limitation of voltage or energy, or protective earthing (see 8.4 and 8.6);
– enclosing or guarding of energized circuits (see 5.9);
– insulation of adequate quality and construction (see 8.5).

Copyright International Electrotechnical Commission
Provided by IHS Markit under license with IEC
No reproduction or networking permitted without license from IHS Not for Resale, 08/26/2020 19:12:41 MDT

The dielectric strength requirements are included to check the quality of the insulation material used at different places in the ME EQUIPMENT.

Subclause 8.1 – Fundamental rule of protection against electric shock

Subclause 8.1 a)

Insulation not complying with 8.8, spacing less than specified in 8.9, etc. are not MEANS OF PROTECTION, but they could influence the voltages or LEAKAGE CURRENTS appearing on ACCESSIBLE PARTS ~~including~~ and APPLIED PARTS. Measurements might therefore need to be made with such parts intact or bypassed, whichever is the worse case.

As there are in general no integrity requirements for signal connections, interruption of a functional earth connection has to be considered as a NORMAL CONDITION.

Subclause 8.1 b)

LEAKAGE CURRENTS are not generally measured in the SINGLE FAULT CONDITION of breakdown of BASIC INSULATION in CLASS I EQUIPMENT because either the LEAKAGE CURRENTS in this case flow only during the time before a fuse or OVER-CURRENT RELEASE operates or the use of an isolated power supply limits the LEAKAGE CURRENTS to safe values. Exceptionally, LEAKAGE CURRENTS are measured during short circuiting of BASIC INSULATION in cases where there are doubts concerning the effectiveness of PROTECTIVE EARTH CONNECTIONS inside the ME EQUIPMENT (see 8.6.4 b)).

In certain instances the short-circuit condition is not necessarily the worst case. As an example, an overvoltage device, intended to prevent damage to insulation, could fail in the open-circuit condition thereby no longer rendering its safety function. This could lead to damaged insulation. It is recognized that in most cases in this subclause, the open-circuit condition is superfluous but for select components it was acknowledged that the open-circuit condition is a valid failure mode. Components of ME EQUIPMENT are also addressed in 4.8.

With regard to the presence of the MAXIMUM MAINS VOLTAGE on an unearthed ACCESSIBLE PART ~~including~~ and APPLIED PARTS, see the rationales for 8.5.2.2 and 8.7.4.7 d).

If ME EQUIPMENT were configured as shown in Figure A.11, interruption of the connection would result in excessive TOUCH CURRENT. This situation is therefore one of the SINGLE FAULT CONDITIONS that should be investigated.

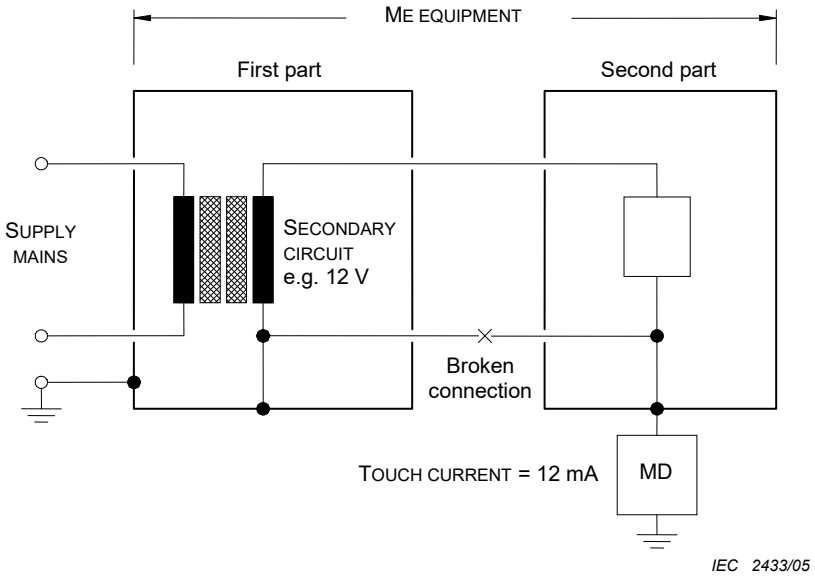

Figure A.11 – Interruption of a power-carrying conductor between ME EQUIPMENT parts in separate ENCLOSURES

Copyright International Electrotechnical Commission
Provided by IHS Markit under license with IEC
No reproduction or networking permitted without license from IHS
Not for Resale, 08/26/2020 19:12:41 MDT

Subclause 8.3 – Classification of APPLIED PARTS

Subclause 8.3 a)

ME EQUIPMENT intended for DIRECT CARDIAC APPLICATION having one or more TYPE CF APPLIED PARTS could have one or more additional TYPE B APPLIED PARTS or TYPE BF APPLIED PARTS that can be applied simultaneously (see also 7.2.10).

Similarly ME EQUIPMENT could have a mixture of TYPE B APPLIED PARTS and TYPE BF APPLIED PARTS.

Subclause 8.3 b)

Most particular standards developed for kinds of ME EQUIPMENT that have PATIENT electrodes require the APPLIED PARTS to be TYPE BF APPLIED PARTS or TYPE CF APPLIED PARTS. For similar kinds of ME EQUIPMENT for which no particular standards are available, it is better to include such a requirement in this standard than to allow such APPLIED PARTS to be TYPE B APPLIED PARTS. The TYPE B APPLIED PART classification is mainly used, in practice, for PATIENT supporting ME EQUIPMENT such as X-ray tables, not for PATIENT electrodes.

~~**Subclause 8.3 d)**~~

~~Parts identified according to 4.6 as needing to be subject to the requirements for APPLIED PARTS (except for marking) will typically contact PATIENTS less frequently than APPLIED PARTS, so the benefits of electrical separation from earth would be less. However in some cases the RISK MANAGEMENT PROCESS could identify a need for such parts to satisfy the requirements for TYPE BF APPLIED PARTS or TYPE CF APPLIED PARTS. This requirement reflects the majority view of the National Committees that responded to an inquiry on this subject during the preparation of this edition.~~

Subclause 8.4.1 – PATIENT CONNECTIONS intended to deliver current

This standard does not specify any limits for currents that are intended to produce a physiological effect in the PATIENT, but particular standards can do so. Any other currents flowing between PATIENT CONNECTIONS are subject to the specified limits for PATIENT AUXILIARY CURRENT.

Subclause 8.4.2 – ACCESSIBLE PARTS ~~including~~ and APPLIED PARTS

Subclause 8.4.2 b)

It is presumed that TOUCH CURRENT can reach the PATIENT by chance contact through various paths, including a path via the OPERATOR. The limits for TOUCH CURRENT therefore apply to all ACCESSIBLE PARTS except PATIENT CONNECTIONS, which are covered by 8.4.2 a), and parts that satisfy the conditions specified in 8.4.2 c).

Subclause 8.4.2 c)

There is little or no justification for the difference in the second edition between the cases where there is a cover that is removable without a TOOL and where there is no cover. The limit values have been harmonized with IEC 60950-1:~~2001~~2005 because Information Technology (IT) equipment is commonly used in ME SYSTEMS, and the values in IEC 60950-1:2005 are not much different from those in the second edition of this standard. (60 V dc is the same, and 42,4 V peak is not much different from 25 V r.m.s.).

Essentially OPERATOR protection is now based on IEC 60950-1:2005 and, therefore, we need to incorporate the protection requirements from that standard. Previously IEC 60601-1 did not have a requirement for protection against hazardous energy but there is a definite RISK from burn, fire and flying debris. This is now addressed using the requirement from IEC 60950-1:~~2001~~2005. The limit values have been established for many years in IEC 60950-1 and its predecessor standards. The maximum available energy is allowed to exceed 240 VA during the first 60 s after contact with the ACCESSIBLE PART (e.g. it takes time for the current

Copyright International Electrotechnical Commission
Provided by IHS Markit under license with IEC
No reproduction or networking permitted without license from IHS
Not for Resale, 08/26/2020 19:12:41 MDT

limit circuit in a power supply to operate and during this time the hazardous energy level can be exceeded).

Subclause 8.4.2 d)

As well as parts that are determined to be ACCESSIBLE PARTS in accordance with 5.9, electrical contact with internal parts is supposed to be made with:

– a pencil or pen, held in a hand, simulated by a guided test pin;

– a necklace or similar pendant, simulated by a metal rod suspended over openings in a top cover;

– a screwdriver for adjustment of a preset control by the OPERATOR, simulated by an inserted metal rod.

Subclause 8.4.3 – ME EQUIPMENT intended to be connected to a power source by a plug

The 45 μC limit is the same as that specified in IEC 60335-1, which is based on the limits in IEC 60479-1 [~~11~~ 73]. It is comparable (though not exactly equivalent) to the 100 nF limit specified in the second edition of this standard. With regard to BASIC SAFETY there is no reason to specify a more stringent limit between the line and earth pins, as in the second edition.

Subclause 8.4.4 – Internal capacitive circuits

The limit has been changed from the 2 mJ specified in the second edition of this standard to the same value as specified in the previous subclause, because whatever is safe for an OPERATOR, or even a PATIENT, who touches the pins of a MAINS PLUG is also safe for someone who opens an ACCESS COVER to gain access to the inside of ME EQUIPMENT.

Subclause 8.5.1 – MEANS OF PROTECTION

Two MEANS OF PROTECTION can be provided in several ways. The following are examples:

1) PATIENT CONNECTIONS and other ACCESSIBLE PARTS are separated from parts different from earth potential by BASIC INSULATION only, but PROTECTIVELY EARTHED and have such a low internal impedance to earth that LEAKAGE CURRENTS do not exceed the allowable values in NORMAL CONDITION and SINGLE FAULT CONDITION.

2) PATIENT CONNECTIONS and other ACCESSIBLE PARTS are separated from parts different from earth potential by BASIC INSULATION and an intermediate PROTECTIVELY EARTHED metal part, which could be a fully enclosing metal screen.

3) PATIENT CONNECTIONS and other ACCESSIBLE PARTS are separated from parts different from earth potential by DOUBLE or REINFORCED INSULATION.

4) Impedances of components prevent the flow to PATIENT CONNECTIONS and other ACCESSIBLE PARTS of LEAKAGE CURRENTS and PATIENT AUXILIARY CURRENTS exceeding the allowable values.

A survey of insulation paths is found in Annex J.

Previous editions of this standard also recognized the possibility of achieving separation by use of a PROTECTIVELY EARTHED intermediate circuit. However it is in general not possible for the whole of a circuit to be connected with very low impedance to the PROTECTIVE EARTH TERMINAL. Also, if one part of a circuit is earthed, other parts of the circuit are then different from earth potential, so have to be further separated from PATIENT CONNECTIONS and other ACCESSIBLE PARTS.

Air can form part or all of the BASIC INSULATION or SUPPLEMENTARY INSULATION.

In general DOUBLE INSULATION is preferable to REINFORCED INSULATION.

The first edition of this standard specified numerous pairs of parts between which separation was required, but the list was incomplete. It was expanded in the second edition but still remained incomplete, for example with regard to the situation illustrated in Figure A.10.

Copyright International Electrotechnical Commission
Provided by IHS Markit under license with IEC
No reproduction or networking permitted without license from IHS Not for Resale, 08/26/2020 19:12:41 MDT

Discussion in the working group at an early stage of the development of this edition established that test houses actually have to identify the various circuits inside ME EQUIPMENT and the various points at which separation could be needed. This edition therefore specifies this PROCEDURE explicitly.

The distinction between MEANS OF OPERATOR PROTECTION and MEANS OF PATIENT PROTECTION was introduced in response to concerns that the requirements of previous editions of this standard for insulation testing, CREEPAGE DISTANCES and AIR CLEARANCES were too stringent.

Many ME SYSTEMS incorporate equipment complying with IEC 60950-1. Also many kinds of ME EQUIPMENT incorporate parts, such as power supplies, that have been primarily designed for use in equipment complying with IEC 60950-1. This led some experts and National Committees to propose that the requirements of this standard be harmonized with IEC 60950-1 as far as possible.

However the test voltages and the minimum values of CREEPAGE DISTANCES and AIR CLEARANCES specified in IEC 60950-1:2005, IEC 60950-1:2005/AMD1:2009 and IEC 60950-1:2005/AMD2:2013 are derived from IEC 60664-1 and are based on assumptions about possible overvoltages in mains and other circuits, particularly the frequency of occurrence of various levels of overvoltage. According to the understanding of the working group experts who revised the corresponding requirements of this standard, compliance with the requirements of IEC 60664-1 or IEC 60950-1 leaves a RISK that transient insulation breakdown could occur with a frequency up to about once per year.

The probability of occurrence of an OPERATOR coming in contact with a relevant part and with earth at the moment when breakdown occurs is low, so the RESIDUAL RISK is acceptable for ME EQUIPMENT, just as it is for IT equipment. However the probability of occurrence of a PATIENT being in contact with an APPLIED PART and with earth is significantly higher. The working group therefore decided that a larger margin of safety should be applied where PATIENT safety is concerned. However there was no reliable basis for deciding what additional margin might be applied to the values from IEC 60664-1, so the same values that were specified in the second edition of this standard have been retained for MEANS OF PATIENT PROTECTION.

For MEANS OF OPERATOR PROTECTION this revision of the standard allows the MANUFACTURER three options (see Figure ~~A.12~~ 40). One option is to apply the requirements of IEC 60950-1 and to identify the appropriate installation category and pollution degree. Alternatively, the MANUFACTURER can apply the values in the tables, which have been derived from IEC 60950-1 on the basis of reasonable assumptions about the installation category and pollution degree. The third option is to treat the MEANS OF OPERATOR PROTECTION as if it were a MEANS OF PATIENT PROTECTION.

Amendment 2 has expanded the options for MEANS OF OPERATOR PROTECTION to include the application of the requirements of IEC 62368-1:2018, which is replacing IEC 60950-1.

Based on a detailed review of the difference in the requirements of IEC 62368-1:2018, IEC 60950-1:2005, IEC 60950-1:2005/AMD1:2009 and IEC 60950-1:2005/AMD2:2013 and this document, it was determined that for MOOP IEC 62368-1:2018 can be used directly as an alternative to IEC 60950-1:2005, IEC 60950-1:2005/AMD1:2009 and IEC 60950-1:2005/AMD2:2013. There are limitations identified where necessary within the normative text to clarify differences between this standard and IEC 62368-1:2018 when barriers providing 2 MOOP are additionally relied on to provide 1 MOPP.

During the review process, it was determined that there are two typical scenarios for how equipment complying with IEC 62368-1:2018 might be incorporated into ME EQUIPMENT. These scenarios are described below in Table A.6. See also Clause 16 for information on the use of equipment complying with IEC 62368-1:2018 as part of an ME SYSTEMS.

Copyright International Electrotechnical Commission
Provided by IHS Markit under license with IEC
No reproduction or networking permitted without license from IHS
Not for Resale, 08/26/2020 19:12:41 MDT

Table A.6 – Typical scenarios for the use of equipment complying with IEC 62368-1:2018 in ME EQUIPMENT

Scenario	Description	Examples
1	Sub-assemblies/components complying with IEC 62368-1:2018 are built into ME EQUIPMENT. In this scenario, sub-assemblies/components complying with IEC 62368-1:2018 are fully contained within the ENCLOSURE of the ME EQUIPMENT and are accessible only with the use of a tool (the output parts of the power supply or AC-DC connectors can be accessible at SIP/SOP connections without the use of a tool). Sub-assemblies/component complying with IEC 62368-1:2018 are generally considered as a sub-assembly/component of the ME EQUIPMENT and they cannot be used separately.	Internal power supplies, optical disc drives, transformers, processor circuit board assemblies, DC-DC converters, AC-DC converters, Bluetooth communication modules
2	Equipment/sub-assemblies complying with IEC 62368-1:2018 are provided as a part of ME EQUIPMENT, but are not built into the ME EQUIPMENT and are readily accessible to the OPERATOR and/or PATIENT. Equipment/sub-assemblies complying with IEC 62368-1:2018 are provided with their own ENCLOSURE and can be used separately from the ME EQUIPMENT.	External/Stand-alone power supplies, computers, monitors, printers, keyboards
NOTE See Figure A.24 and Figure A.25 for pictorial representations of Scenarios 1 and 2.		

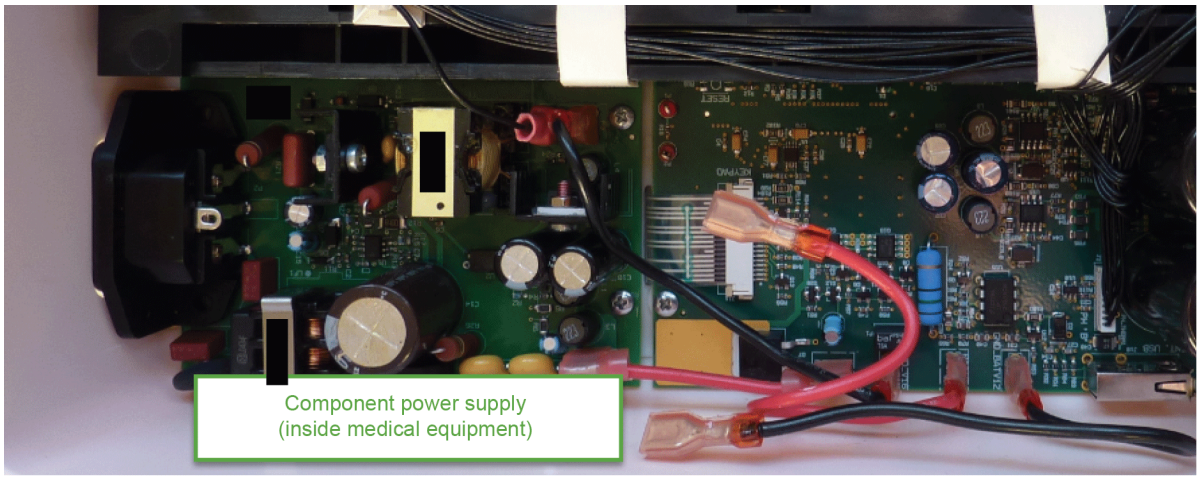

IEC

Figure A.24 – Example of Scenario 1

Copyright International Electrotechnical Commission
Provided by IHS Markit under license with IEC
No reproduction or networking permitted without license from IHS
Not for Resale, 08/26/2020 19:12:41 MDT

IEC

Figure A.25 – Example of Scenario 2

The analysis focused on these scenarios. The purpose was to determine if any differences in the application of requirements of IEC 62368-1:2018 would be necessary based on the use scenario.

Where IEC 62368-1:2018 has been identified as an acceptable alternative to the requirements of this standard or IEC 60950-1:2005, IEC 60950-1:2005/AMD1:2009 and IEC 60950-1:2005/AMD2:2013, no additional rationale has been written.

During the review process, some differences in terminology were identified between this standard and IEC 62368-1:2018. Specifically, the definitions for TOUCH CURRENT and PEAK WORKING VOLTAGE were reviewed; while differences were noted, it was determined that these differences did not have any technical effect on the use of IEC 62368-1:2018 as identified in the body of this document.

Y capacitors are used to reduce radio frequency interference by providing a low impedance path to earth for high frequency a.c. They are also used for bridging DOUBLE or REINFORCED INSULATION as part of the interference suppression regime. There are four types: Y1, Y2, Y3 and Y4. Y1 capacitors are designed for use with three phase mains and have a WORKING VOLTAGE of up to 500 V a.c. and a withstand voltage of 4 000 V a.c. Y2 capacitors are designed for use with single phase mains and have a WORKING VOLTAGE up to 300 V a.c. and a withstand voltage of ~~2 500~~ 1 500 V a.c. Y3 capacitors are similar to Y2 capacitors but have a WORKING VOLTAGE up to 250 V a.c. Y4 capacitors are designed for use with low voltage mainsand have a WORKING VOLTAGE up to 150 V a.c. and a withstand voltage of 1 000 V a.c. These capacitors are safety critical since they provide a leakage path to earth or across a barrier. So they must be certified and monitored by a recognised test house to IEC 60384-14, which serves to control their manufacture.

~~One Y1 capacitor can be used to provide two MOOP's but only one MOPP (PATIENTS need a higher level of protection than OPERATORS). A Y2 capacitor can be used to provide one MOOP only.~~

Copyright International Electrotechnical Commission
Provided by IHS Markit under license with IEC
No reproduction or networking permitted without license from IHS
Not for Resale, 08/26/2020 19:12:41 MDT

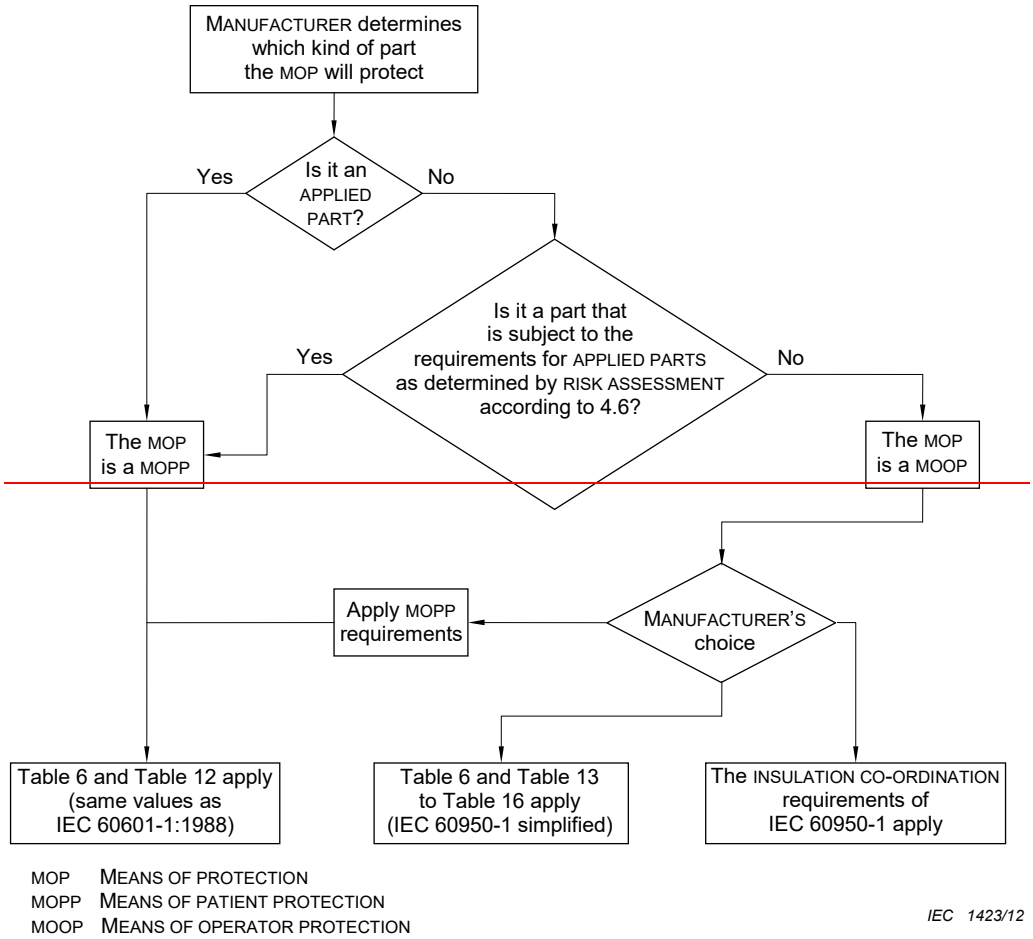

~~Figure A.12 – Identification of MEANS OF PATIENT PROTECTION and MEANS OF OPERATOR PROTECTION~~

Subclause 8.5.1.2 – MEANS OF PATIENT PROTECTION (MOPP)

CREEPAGE DISTANCES:

A detailed review of the requirements for CREEPAGE DISTANCES from IEC 62368-1:2018, IEC 60950-1:2005 and this standard confirmed that there were no significant changes in the requirements and that 2 MOOP according to IEC 62368-1:2018 will provide 1 MOPP according to this document.

When determining creepage distances according to IEC 62368-1:2018, the largest value from IEC 62368-1:2018, Table 17 or Table 18 is always applied. This is clarified in the text at the bottom of IEC 62368-1:2018, Table 17.

AIR CLEARANCE:

Table 13 and Table 14 were reviewed to determine where barriers providing 2 MOOP would also satisfy the requirements for 1 MOPP from Table 12. Based on historical discussions, it has been assumed that 2 MOOP would always also meet the requirements for 1 MOPP with respect to AIR CLEARANCE requirements; however, limitations were identified which led to the addition of NOTE 4 in Table 12.

IEC 60950-1:2005, Table 2K and Table 2L and IEC 62368-1:2018, Table 10 to Table 15 (inclusive) were evaluated for the same purpose and compared to Table 12.

Copyright International Electrotechnical Commission
Provided by IHS Markit under license with IEC
No reproduction or networking permitted without license from IHS
Not for Resale, 08/26/2020 19:12:41 MDT

This review of the requirements for AIR CLEARANCE between Table 12, IEC 60950-1:2005, Table 2K and Table 2L and IEC 62368-1:2018, Table 10 to Table 14 (inclusive) identified limitations for when 2 MOOP would provide 1 MOPP. This is important when evaluating separation from the SUPPLY MAINS (typically provided by a switch mode power supply or similar component) since a barrier providing 2 MOOP will not always provide 1 MOPP as currently required by this document. Additional information and examples are provided below.

Table 13 is copied from IEC 60950-1:2005, Table 2K; Table 14 is copied from IEC 60950-1:2005, Table 2L.

The values documented in IEC 62368-1:2018 are based on the approach for AIR CLEARANCE values as specified in the basic safety publication IEC 60664-1. The values in this standard are not based on this same approach. Since the scope of Amendment 2 is fixed, a re-evaluation of the current AIR CLEARANCE requirements is not within the scope of this review. It is however expected that this review should be done as part of the fourth edition.

The results of this review identified that the requirements for 2 MOOP according Table 13 and Table 14, or IEC 60950-1:2005, Table 2K and Table 2L will meet the requirements for 1 MOPP according to Table 12 only up to and including a WORKING VOLTAGE of 707 V d.c. / 500 V r.m.s. (Rows 1 to 7 of Table 12).

Examples:

Table 12, Table 13 and Table 14 and IEC 60950-1:2005, Table 2K and Table 2L:

Example 1 (Acceptable): A 240 V r.m.s. mains powered switch mode power supply with a WORKING VOLTAGE of 400 V r.m.s. across the switching barrier would require 3,5 mm AIR CLEARANCE for 1 MOPP according to Row 6 of Table 12. Assumptions: Overvoltage Category II, Pollution degree 2, Altitude 2 000 m.

The requirement for 2 MOOP from Table 13 would be 4,0 mm (Row 2, based voltage of 340 V peak / 240 V r.m.s., based on the RATED MAINS VOLTAGE, see 8.9.1.10) plus 0,4 mm from Table 14 (PEAK WORKING VOLTAGE, which would be a minimum of 566 V peak; Row 3) equal to 4,4 mm AIR CLEARANCE total. Assumptions: Overvoltage Category II, Pollution degree 1, 2 and 3, Altitude 2 000 m.

In this example, the minimum AIR CLEARANCE would not be less than 4,4 mm which meets the requirement of 2,5 mm from Row 6 of Table 12.

Example 2 (Unacceptable): A 240 V r.m.s. mains powered switch mode power supply with a WORKING VOLTAGE of 401 V r.m.s. across the switching barrier would require 4,5 mm AIR CLEARANCE for 1 MOPP according to Row 7 of Table 12. Assumptions: Overvoltage Category II, Pollution degree 2, Altitude 2 000 m.

The requirement for 2 MOOP from Table 13 would be 4,0 mm (Row 2, based voltage of 340 V peak / 240 V r.m.s., based on the RATED MAINS VOLTAGE, see 8.9.1.10) plus 0,4 mm from Table 14 (PEAK WORKING VOLTAGE, which would be a minimum of 567 V peak; Row 3) equal to 4,4 mm AIR CLEARANCE TOTAL. Assumptions: Overvoltage Category II, Pollution degree 1, 2 and 3, Altitude 2 000 m.

In this example, the minimum AIR CLEARANCE could be 4,4 mm which does not meet the requirement of 4,5 mm from Row 7 of Table 12.

A comparison between Table 12 and IEC 62368-1:2018, Table 10 to Table 14 (inclusive) was also performed. This comparison determined that DOUBLE INSULATION or REINFORCED INSULATION according to IEC 62368-1:2018 (which is equivalent to 2 MOOP) will meet the

Copyright International Electrotechnical Commission
Provided by IHS Markit under license with IEC
No reproduction or networking permitted without license from IHS
Not for Resale, 08/26/2020 19:12:41 MDT

requirements for 1 MOPP according to Table 12 only up to and including 354 V d.c. / 250 V r.m.s.

Table 12 and IEC 62368-1:2018, Table 10 to Table 14 (inclusive):

Example 3 (Acceptable): A 240 V r.m.s. mains powered switch mode power supply with a WORKING VOLTAGE of 250 V r.m.s. across the switching barrier would require 2,5 mm AIR CLEARANCE for 1 MOPP according to Row 5 of Table 12. Assumptions: Overvoltage Category II, Pollution degree 2, Altitude 2 000 m.

The requirement for REINFORCED INSULATION (2 MOOP) from IEC 62368-1:2018 is taken as the higher value of the values determined per Procedure 1 or Procedure 2:

Procedure 1: Assume altitude of 2 000 m (no multiplication factor for AIR CLEARANCES)

– IEC 62368-1:2018, Table 10 would be 2,54 mm (Row 9, based on a temporary overvoltage of 2 000 V); Pollution degree 2

– IEC 62368-1:2018, Table 11 would be 0,14 mm (Row 1, based on peak voltage of 354 V); Pollution degree 2

– Highest value = 2,54 mm

Procedure 2: Assume altitude of 2 000 m (no multiplication factor for AIR CLEARANCES); Pollution degree 2

– IEC 62368-1:2018, Table 14 would be 3,0 mm (Row 10, based on mains transient voltage of 2 500 V)

As an alternative to Procedure 2, the value from Procedure 1 can be used with an additional electric strength test according to IEC 62368-1:2018, Table 15.

In either case the minimum AIR CLEARANCE would not be less than 2,54 mm which meets the requirement of 2,5 mm from Row 5 of Table 12.

Example 4 (Unacceptable): A 240 V r.m.s. mains powered switch mode power supply with a working voltage of 251 V r.m.s. across the switching barrier would require 3,5 mm AIR CLEARANCE for 1 MOPP according to Row 6 of Table 12. The requirement for REINFORCED INSULTATION (2 MOOP) is taken as the higher value of the values determined per IEC 62368-1:2018 Procedure 1 or Procedure 2:

Procedure 1: Assume altitude of 2 000 m (no multiplication factor for AIR CLEARANCES)

– IEC 62368-1:2018, Table 10 would be 2,54 mm (Row 9, based on a temporary overvoltage of 2 000 V); Pollution degree 2

– IEC 62368-1:2018, Table 11 would be 0,14 mm (Row 1, based on peak voltage of 355 V); Pollution degree 2

– Highest value = 2,54 mm

Procedure 2: Assume altitude of 2 000 m (no multiplication factor for AIR CLEARANCES); Pollution degree 2

– IEC 62368-1:2018, Table 14 would be 3,0 mm (Row 10, based on mains transient voltage of 2 500 V)

As an alternative to Procedure 2, the value from Procedure 1 can be used with an additional electric strength test according to IEC 62368-1:2018, Table 15. In this case, the minimum AIR CLEARANCE could be 2,54 mm.

Neither 3,0 mm nor 2,54 mm meet the requirement of 3,5 mm from Row 6 of Table 12.

Copyright International Electrotechnical Commission
Provided by IHS Markit under license with IEC
No reproduction or networking permitted without license from IHS Not for Resale, 08/26/2020 19:12:41 MDT

Additional information on differences between the methods for determining AIR CLEARANCE requirements between this standard, IEC 60950-1:2005 and IEC 62368-1:2018:

A number of differences in the methods for determining the AIR CLEARANCE requirements between the standards evaluated were identified. The method specified in IEC 62368-1:2018 is more complicated than the method used according to this standard and IEC 60950-1:2005. These differences were discussed with experts from IEC TC 108 (technical committee for IEC 60950-1:2005 and IEC 62368-1:2018) to confirm these differences were properly understood by experts from IEC/TC 62. One of the differences is that WORKING VOLTAGE (d.c. or r.m.s.) is used to determine the AIR CLEARANCE requirements according to this standard or IEC 60950-1:2005. IEC 62368-1:2018 instead uses the term “voltage” which can have three different meanings depending on the circuit. “Voltage” can mean either the peak value of the working voltage, the transient overvoltage or the temporary overvoltage–in all cases, the highest value of this “voltage” is used to determine the AIR CLEARANCE requirement.

IEC TC 108 published a Technical Report (IEC TR 62368-2 [77]) which explains the process. The excerpt shown below is intended to provide a basic overview of how AIR CLEARANCE requirements according to IEC 62368-1:2018 are determined.

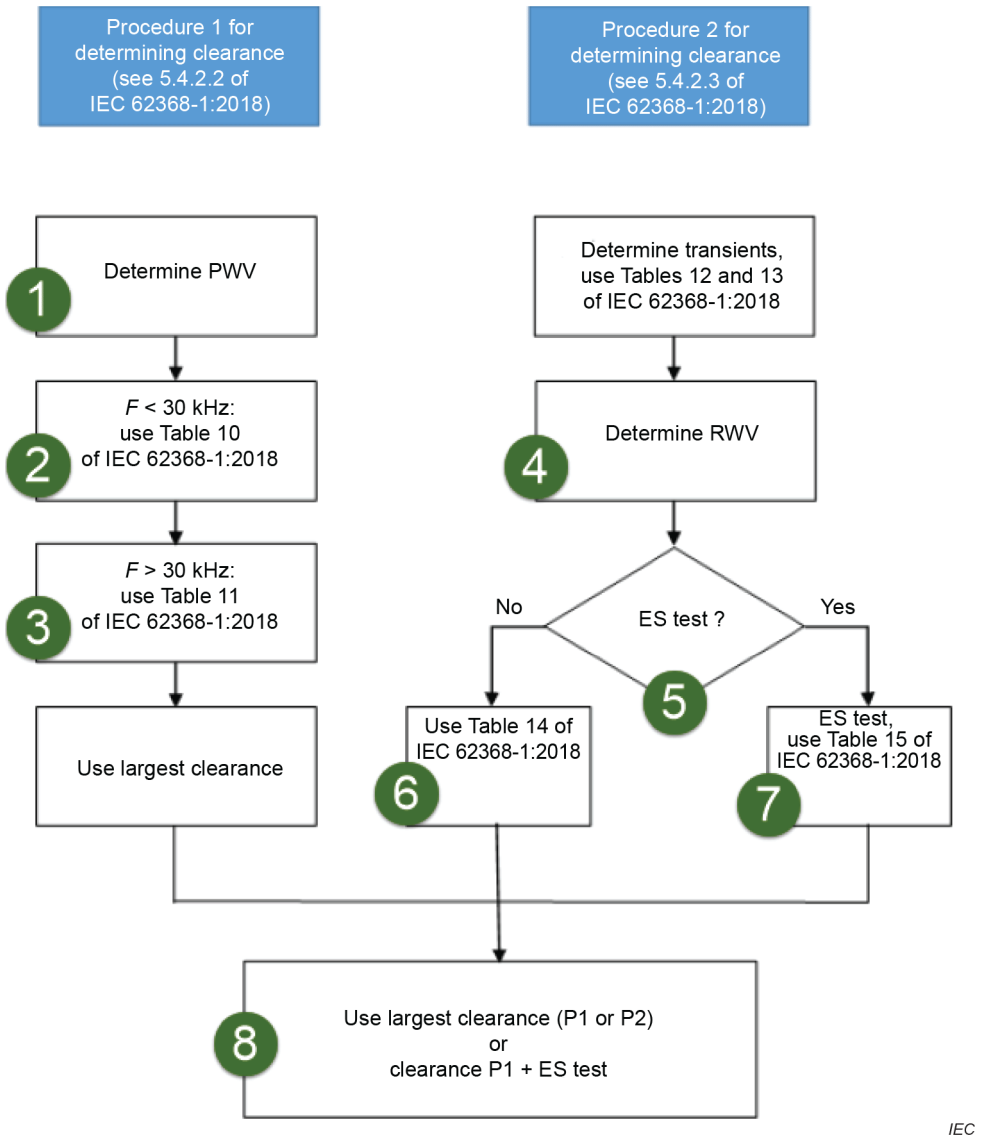

Figure A.26 – Procedure for determination of AIR CLEARANCE requirements IEC TR 62368-2:2019 [77], 5.4.2.1 (modified)

Copyright International Electrotechnical Commission
Provided by IHS Markit under license with IEC
No reproduction or networking permitted without license from IHS
Not for Resale, 08/26/2020 19:12:41 MDT

The steps 1-8 identified in Figure A.26 have been added to aid in the explanation below:

Procedure 1 (P1)

Step 1: Determine the peak of the working voltage (PWV)–for a mains connected switch mode power supply, this would be the peak value of the switching voltage, not the peak value of the SUPPLY MAINS voltage.

Step 2: IEC 62368-1:2018, Table 10 is used to determine the required AIR CLEARANCE. For mains connected equipment, this table will always be applicable. When using this table, it is the temporary overvoltage that is used in the voltage column (not the SUPPLY MAINS voltage). IEC 62368-1:2018, 5.4.2.2 specifies a temporary overvoltage of 2 000 V peak to be used if the SUPPLY MAINS voltage does not exceed 250 V (assumed to mean 250 V r.m.s.). For SUPPLY MAINS voltages above 250 V and not exceeding 600 V, the temporary overvoltage is 2 500 V peak. Using this information along with the pollution degree, IEC 62368-1:2018, Table 10 provides a value for the required AIR CLEARANCE.

Step 3: Using the peak of the WORKING VOLTAGE, IEC 62368-1:2018, Table 11 will provide a value for the required AIR CLEARANCE assuming Pollution Degree 2. For pollution degree 1 or pollution degree 3, the multiplication factor specified in the table is used.

The largest value from Step 2 or Step 3 is recorded as the requirement.

Procedure 2 (P2)

Step 4: Determine the required withstand voltage (RWV). The RWV is based on the supply circuit and is either a transient voltage, AC mains transient voltage, DC mains transient voltage or external circuit transient voltage. IEC 62368-1:2018 provides requirements for either determining this voltage based on information about the supply circuit or measuring this voltage. As an example, a SUPPLY MAINS circuit operating at 240 V r.m.s. would use the AC mains transient voltage of 2 500 V peak for an overvoltage category II supply (IEC 62368-1:2018, Table 12).

Step 5: There are 2 methods of satisfying Procedure 2, Method A or Method B:

Method A: Apply IEC 62368-1:2018, Table 14 to determine an AIR CLEARANCE value (Step 6), or

Method B: Apply IEC 62368-1:2018, Table 15 to determine an electric strength test value to be used (Step 7).

Step 6: Take the RWV value determined in Step 4 and determine the required AIR CLEARANCE from IEC 62368-1:2018, Table 14 using the RWV along with the pollution degree. Skip Step 7.

Step 7: Use IEC 62368-1:2018, Table 15 to determine the electric strength test voltage using the RWV determined in Step 4.

Step 8: Determine the required AIR CLEARANCE–this is either the highest value determined using Procedure 1 (Step 3) and Procedure 2 (Step 6) or the value from Procedure 1 (Step 3) with the electric strength test (Step 7).

Subclause 8.5.2.1 – F-TYPE APPLIED PARTS

The essential feature of an F-TYPE APPLIED PART is its separation from other parts. This subclause specifies and quantifies the necessary degree of separation.

Multiple functions can be considered as multiple APPLIED PARTS (which have to be separated from each other by one MEANS OF PATIENT PROTECTION) or as one APPLIED PART. This is decided by the MANUFACTURER after assessing the RISK that earthing of one or more of the

Copyright International Electrotechnical Commission
Provided by IHS Markit under license with IEC
No reproduction or networking permitted without license from IHS Not for Resale, 08/26/2020 19:12:41 MDT

PATIENT CONNECTION(S) of one function could result in excessive LEAKAGE CURRENT through the PATIENT CONNECTION(S) of another function, in the condition in which an unintended voltage originating from an external source becomes connected to the PATIENT.

The 500 V r.m.s. limit for protective devices was already specified in the first edition of this standard. The original rationale is not known, but this voltage corresponds to the highest RATED voltage specified in 4.10.

Subclause 8.5.2.2 – TYPE B APPLIED PARTS

This requirement addresses the possibility that an unintended voltage originating from an external source becomes connected to a part of the ME EQUIPMENT. In the absence of appropriate separation between such a part and PATIENT CONNECTIONS, an excessive PATIENT LEAKAGE CURRENT could result.

According to Clause 17 c) of the second edition of this standard, this requirement applied to all APPLIED PARTS, but in many cases it no longer applies:

– For F-TYPE APPLIED PARTS, the isolation required by 8.5.2.1 also covers this situation (but TYPE BF APPLIED PARTS require an additional test, as explained in the rationale to 8.7.4.7 d)).

– ~~The RISK cannot arise~~ A HAZARDOUS SITUATION cannot develop if either the ME EQUIPMENT part concerned or the PATIENT CONNECTIONS of a TYPE B APPLIED PART are PROTECTIVELY EARTHED. (Failure of the PROTECTIVE EARTH CONNECTION together with the appearance of the unintended voltage would be a double fault condition.)

– If the ME EQUIPMENT part concerned is physically contiguous with the APPLIED PART (for example a dental handpiece) the requirement does not apply if the RISK of contact with a source of voltage or LEAKAGE CURRENT above permitted limits is acceptably low.

Subclause 8.5.2.3 – PATIENT leads or PATIENT cables

There are two sets of circumstances to guard against:

– firstly, for TYPE BF APPLIED PARTS and TYPE CF APPLIED PARTS, there should be no possibility of an accidental PATIENT-to-earth connection via any lead that can become detached from the ME EQUIPMENT; even for a TYPE B APPLIED PART an unwanted connection to earth can have an adverse effect on the operation of the ME EQUIPMENT;

– secondly, for all types of APPLIED PART, there should be no possibility of connecting the PATIENT accidentally to parts of ME EQUIPMENT or other conductive parts in the vicinity from which a current in excess of the allowable LEAKAGE CURRENT could flow.

An extreme case of the latter HAZARD would be a direct connection to the SUPPLY MAINS, resulting from insertion of the connector into a mains outlet or into the socket end of a DETACHABLE POWER SUPPLY CORD. It is essential to prevent this from occurring.

With certain combinations of PATIENT and MAINS CONNECTORS it will be possible to plug the PATIENT connector accidentally into the mains socket.

This possibility cannot reasonably be removed by dimensional requirements as to do so would make single-pole connectors excessively large. Such an incident is rendered safe by the requirement for the PATIENT connector to be protected by insulation having a CREEPAGE DISTANCE of at least 1,0 mm and a dielectric strength of at least 1 500 V. The latter on its own would not suffice as 1 500 V protection could easily be achieved by thin plastic foil that would not stand up to daily wear or to being pushed, possibly repeatedly, into a mains socket. For this reason also it can be seen that the insulation should be durable and rigid.

The wording of this requirement was modified from that in the second edition of this standard to avoid use of the phrases “conductive connection”, which was eliminated as a defined term. This change was a direct result of National Committee comments during the preparation of this edition.

Copyright International Electrotechnical Commission
Provided by IHS Markit under license with IEC
No reproduction or networking permitted without license from IHS
Not for Resale, 08/26/2020 19:12:41 MDT

According to the rationale in the second edition of this standard, the test in which the test finger is applied with a force of 10 N was intended “to check the strength of the insulating material.” This has now been supplemented by an explicit cross reference to 8.8.4.1.

In response to an enquiry, one National Committee stated that this test is “a mechanical test of the protective cover over the pin;” suggesting that the test was intended to apply specifically to one particular kind of connector design, in which the contact is surrounded by a movable sheath designed to allow contact with the correct mating connector but not with other parts.

During the development of this edition of this standard, the question arose whether this test should be restricted to single-pole connectors, as in the second edition of this standard, or should apply to multi-pole connectors as well. Some multi-pole connectors are of similar shape to single-pole connectors and could similarly be inserted into a MAINS CONNECTOR, so the same considerations of adequacy of insulation apply equally. On the other hand, typical kinds of multi-pole connectors that are in common use cannot be inserted into a MAINS CONNECTOR, but would fail this test if they were subject to it, because the test finger can easily touch their contacts, even without the application of a 10 N force.

A further enquiry to the National Committees yielded a range of responses, with reasonable consensus on some questions but no consensus as to whether this test should apply to all connectors or should be restricted to single-pole connectors.

This test should certainly apply to a multi-pole connector that is of such shape and size that it could be inserted into a mains socket. In this case, the RISK is the same as with a single-pole connector.

Another reason for applying this test to some multi-pole connectors is that the test with the flat plate does not exhaustively assess the possibility of contact with conductive parts in the vicinity from which a current in excess of the allowable LEAKAGE CURRENT could flow. Almost any kind of connector, if detached from the ME EQUIPMENT or dropped, could possibly make contact with something besides the intended mating connector, but the RISK depends on the shape of the connector and the circumstances. In most cases the RISK is low. For example a typical “D” connector is likely to make contact with an earthed object only momentarily, whereas a straight pin could make contact for a prolonged period. However even prolonged contact with a metal object can result in a ~~HAZARD~~ HAZARDOUS SITUATION only if it occurs in combination with a fault or abnormal situation that allows an excessive current to flow through the PATIENT. The RISK is in all cases much less than the RISK if the connector can make contact with a mains socket. The requirements of this standard should be formulated in relation to the RISK. The standard should minimise RISK to the PATIENT, while allowing MANUFACTURERS a reasonable range of choice of connectors.

“Any connector” should be understood to include multiple contact connectors, several connectors and connectors in series.

The dimension of 100 mm diameter is not in the least important and merely serves to indicate the scale of the flat surface. Any sheet of conductive material larger than this would be suitable.

Subclause 8.5.3 – MAXIMUM MAINS VOLTAGE

Several requirements and tests of this standard relate to the possibility that an unintended voltage originating from an external source becomes connected to the PATIENT or to certain parts of the ME EQUIPMENT. The actual magnitude of such a voltage is unknown; but according to the second edition of this standard it was taken to be the highest RATED MAINS VOLTAGE, or for polyphase equipment the phase to neutral supply voltage. These values reflected a reasonable worst-case assumption that the actual unintended external voltage is unlikely to exceed the voltage of the SUPPLY MAINS in the location where the ME EQUIPMENT is used, and that ME EQUIPMENT is unlikely to be used in a location where the SUPPLY MAINS has a voltage higher than its highest RATED MAINS VOLTAGE. For INTERNALLY POWERED ME EQUIPMENT the value specified ~~was (and remains) 250 V~~ is 240 V, because this is the highest commonly encountered phase-to-neutral voltage in locations where ME EQUIPMENT is used.

Copyright International Electrotechnical Commission
Provided by IHS Markit under license with IEC
No reproduction or networking permitted without license from IHS
Not for Resale, 08/26/2020 19:12:41 MDT

In early drafts of this edition, the corresponding wording only referred to a.c. SUPPLY MAINS. This mistake was pointed out during the comment period. Discussion of this comment confirmed that the requirements should not depend on whether the SUPPLY MAINS is a.c. or d.c., but revealed a further anomaly. If ME EQUIPMENT is specified for connection to an extra-low voltage (ELV) SUPPLY MAINS (for example 12 V in an ambulance) but not to any higher voltage SUPPLY MAINS, the external voltage assumed for test purposes would be only the ELV. Such ME EQUIPMENT could however be used in locations where a higher voltage SUPPLY MAINS is also installed. The wording has therefore been revised to remove this anomaly.

If ME EQUIPMENT has a highest RATED supply voltage less than 100 V, it will necessarily be used in a special location where that supply is available, and we do not know what other supplies could also be present. Therefore the external voltage assumed for relevant tests is ~~250~~ 240 V, as for INTERNALLY POWERED ME EQUIPMENT.

~~However ME EQUIPMENT having a highest RATED MAINS VOLTAGE of around 115 V is unlikely to be used in locations having higher voltage SUPPLY MAINS, so the external voltage assumed for relevant tests is equal to the highest RATED MAINS VOLTAGE, as in the second edition of this standard.~~

Subclause 8.5.4 – WORKING VOLTAGE

The dielectric strength test voltages specified in Table 6 are appropriate for insulation that is normally subjected to a continuous WORKING VOLTAGE and to transient overvoltages.

The WORKING VOLTAGE for each MEANS OF PROTECTION forming DOUBLE INSULATION is the voltage to which the DOUBLE INSULATION as a whole is subjected, because either MEANS OF PROTECTION can be subjected to this voltage if the other MEANS OF PROTECTION fails.

~~For insulation between two isolated parts or between an isolated part and an earthed part, the WORKING VOLTAGE could in some cases be equal to the arithmetic sum of the highest voltages between any two points within both parts.~~

For DEFIBRILLATION-PROOF APPLIED PARTS, a test voltage deduced on the basis of a WORKING VOLTAGE equal to the defibrillation peak voltage would be far too high for insulation that in NORMAL USE is exposed only occasionally to voltage impulses, normally shorter than ~~10~~ 1 s and without additional overvoltage.

Subclause 8.5.5 – DEFIBRILLATION-PROOF APPLIED PARTS

The special test described in 8.5.5 is considered to ensure sufficient protection against exposure to defibrillation pulses, no separate dielectric strength test being necessary.

Subclause 8.5.5.1 – Defibrillation protection

One or the other of the defibrillation paddles could, by virtue of its clinical application, be connected to earth or at least referenced to earth.

When a defibrillator is used on the PATIENT, a HIGH VOLTAGE can thus be impressed either between one part of the ME EQUIPMENT and another, or between such parts collectively and earth. ACCESSIBLE PARTS should be adequately isolated from PATIENT CONNECTIONS or protected in some other way. The insulation of the PATIENT CONNECTIONS cannot be protected by voltage limiting devices relying on earthed connections.

The DEFIBRILLATION-PROOF APPLIED PART marking indicates that an APPLIED PART can safely remain attached to a PATIENT who is being defibrillated without any adverse effect on subsequent use of the ME EQUIPMENT.

The tests ensure:

a) that any ACCESSIBLE PARTS of ME EQUIPMENT, PATIENT cables, cable connectors, etc. that are not PROTECTIVELY EARTHED will not deliver a hazardous level of charge or energy due to flashover of defibrillation voltage; and

Copyright International Electrotechnical Commission
Provided by IHS Markit under license with IEC
No reproduction or networking permitted without license from IHS
Not for Resale, 08/26/2020 19:12:41 MDT

b) that the ME EQUIPMENT will continue to function (at least with regard to BASIC SAFETY and ESSENTIAL PERFORMANCE) after exposure to defibrillation voltage.

The requirement and the test PROCEDURE refer to “any necessary time” stated in the ACCOMPANYING DOCUMENTS. There is no requirement for the ACCOMPANYING DOCUMENTS to include a statement of a recovery time, but if there is no statement the ME EQUIPMENT has to recover and deliver its BASIC SAFETY and ESSENTIAL PERFORMANCE immediately.

The tests are conducted with the ME EQUIPMENT connected to the SUPPLY MAINS and in operation according to the instructions for use because the tests deal not only with the effect of the defibrillation energy on BASIC SAFETY but also on the ability of the ME EQUIPMENT to deliver its ESSENTIAL PERFORMANCE after the stated recovery time.

NORMAL USE includes the situation that a PATIENT is defibrillated while connected to the ME EQUIPMENT and, at the same time, the OPERATOR or another person is in contact with the ENCLOSURE. The possibility of this occurring at the same time as the SINGLE FAULT CONDITION of a defective PROTECTIVE EARTH CONNECTION is very unlikely and is therefore disregarded. However, interruption of functional earth connections is more probable, and is therefore required for these tests.

The SEVERITY of electric shock that a person receives when touching ACCESSIBLE PARTS during the discharge of a defibrillator is limited to a value (corresponding to a charge of 100 μC) which can be felt and which could be unpleasant, but which is not dangerous.

SIGNAL INPUT/OUTPUT PARTS are included, as signal lines to remote ME EQUIPMENT could otherwise carry energies that might be hazardous.

The test circuits of Figure 9 and Figure 10 of this standard are designed to simplify the test by integrating the voltage appearing across the test resistance (R_1).

The value of the inductance L in the test circuits of Figure 9 and Figure 10 is chosen to provide a shorter than normal rise time in order to test adequately the incorporated protective means.

If ME EQUIPMENT would be designed according to 8.5.2.1 and 8.5.5.1, it might have two different functions on one common APPLIED PART circuit. Consider the example in Figure A.21. In this example, the ECG and an invasive blood pressure catheter (IBP) share one common APPLIED PART circuit. In real use in the hospital, sometimes only one function (ECG) is used while the other function (IBP) is not connected. If the PATIENT needs to be defibrillated, there is a potential that a second OPERATOR would get an electric shock at unused IBP outlets during selecting of proper adjustments at the ME EQUIPMENT (e.g. at a multi-parameter patient monitor). It should be pointed out that in principle, the 5 KV could occur at every disconnected connector, which does not have adequate recessed pins. However, in practice, the probability of occurrence of HARM is much higher at the unused APPLIED PART outlets on the ME EQUIPMENT compared to any connector of adapter cables. Adapter cables will normally not be touched by the OPERATOR during defibrillation, because before defibrillation the command “stand clear” will be given. Even in the case that a disconnected adapter cable would be touched by an OPERATOR during defibrillation, it will most probably be touched at the isolated plastic parts, but not at its internal pins.

Copyright International Electrotechnical Commission
Provided by IHS Markit under license with IEC
No reproduction or networking permitted without license from IHS
Not for Resale, 08/26/2020 19:12:41 MDT

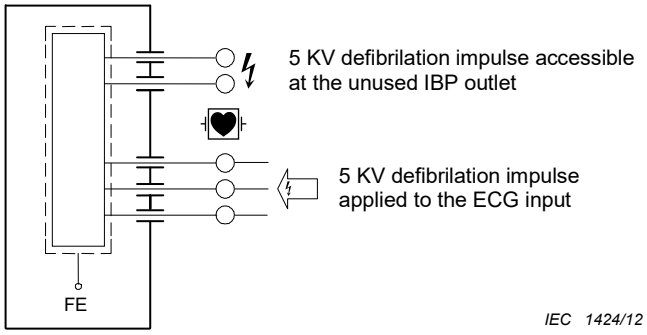

Figure A.21 – Example of ME EQUIPMENT having two different functions on one common APPLIED PART circuit

Rationale for impulse test voltage

When a defibrillation voltage is applied to the thorax of a PATIENT, via externally applied paddles (or defibrillation electrodes), the body tissue of the PATIENT in the vicinity of the paddles and between the paddles becomes a voltage dividing system.

The voltage distribution can be gauged roughly using three-dimensional field theory but is modified by local tissue conductivity that is far from uniform.

If the electrode of another item of ME EQUIPMENT is applied to the PATIENT, roughly within the compass of the defibrillator paddles, the voltage to which such an electrode is subjected depends on its position but will generally be less than the on-load defibrillation voltage.

Unfortunately it is not possible to say how much less as the electrode in question can be placed anywhere in this area, including immediately adjacent to one of the defibrillator paddles. In the absence of a relevant particular standard, it is required that such an electrode and the ME EQUIPMENT to which it is connected is able to withstand the full defibrillation voltage. This is the no-load voltage as one of the defibrillator paddles might not be making good contact with the PATIENT.

This standard therefore specifies 5 kV d.c. as the appropriate test voltage in the absence of a relevant particular standard.

Applying Subclause 4.5, a MANUFACTURER is allowed to use alternate means to address a RISK covered by this standard if the RESIDUAL RISK after applying the alternate means is equal or less than the RESIDUAL RISK after applying the requirements of this standard. It is possible for a MANUFACTURER to determine that a lower test voltage is appropriate depending on the INTENDED USE of the ME EQUIPMENT and the location of the APPLIED PARTS on the PAIENT if it can be demonstrated that the test voltage selected is the maximum voltage that can appear on the APPLIED PART with 5 kV applied to the chest. Such parts can be classified and marked as a DEFIBRILLATION-PROOF APPLIED PARTS.

Subclause 8.6 – Protective earthing, functional earthing and potential equalization of ME EQUIPMENT

Typically, metal ACCESSIBLE PARTS of CLASS I ME EQUIPMENT are PROTECTIVELY EARTHED. However, they could be separated by other MEANS OF PROTECTION, in accordance with 8.5. Also some metal ACCESSIBLE PARTS could be earthed incidentally, neither by a PROTECTIVE EARTH CONNECTION nor for functional purposes. For example, such a part could be in contact with another part that is PROTECTIVELY EARTHED but does not itself need to be PROTECTIVELY EARTHED.

Subclause 8.6.1 – Applicability of requirements

PROTECTIVE EARTH CONNECTIONS that are only relevant to the safety of OPERATORS are allowed to comply either with the requirements of this standard or with those of IEC 60950-1:2005,

Copyright International Electrotechnical Commission
Provided by IHS Markit under license with IEC
No reproduction or networking permitted without license from IHS Not for Resale, 08/26/2020 19:12:41 MDT

IEC 60950-1:2005/AMD1:2009 and IEC 60950-1:2005/AMD2:2013, but the latter alternative is not allowed for PROTECTIVE EARTH CONNECTIONS that are relevant to the safety of both OPERATORS and PATIENTS.

Subclause 8.6.2 – PROTECTIVE EARTH TERMINAL

These requirements are intended to ensure a reliable connection between the ME EQUIPMENT and the protective earthing system of the electrical installation.

Subclause 8.6.3 – Protective earthing of moving parts

Connections to moving parts, whether made by sliding contacts, by flexible wires or by any other means, could be more susceptible than ordinary FIXED connections to deterioration during the EXPECTED SERVICE LIFE of the ME EQUIPMENT. Therefore, they are not acceptable as PROTECTIVE EARTH CONNECTIONS unless their reliability is demonstrated.

Subclause 8.6.4 a)

PROTECTIVE EARTH CONNECTIONS can only perform their protective function if they are able to carry the fault current resulting from a failure in BASIC INSULATION.

Such a current is assumed to have sufficient amplitude to cause operation of protective devices in the electrical installation (fuses, circuit-breakers, earth leakage circuit-breakers and the like) in a reasonably short time.

It is therefore necessary to check both the impedance and the current-carrying capability of PROTECTIVE EARTH CONNECTIONS.

The minimum time required for the test current is intended to reveal any overheating of parts of the connection due to thin wiring or a bad contact. Such a “weak spot” might not be discovered by resistance measurement alone.

PROTECTIVE EARTH CONNECTIONS can have zones of higher impedance, for example due to oxidation of materials. Use of a current source with an unlimited voltage could prevent detection of such zones because of their ability to flash through. The impedance is therefore determined first, using a limited voltage.

If this voltage is sufficient to drive the specified test current through the total impedance, then this one test also serves to demonstrate the current-carrying capability of the connection. Otherwise an additional test is necessary, either using a higher voltage or by assessing the cross-sectional area of the connection by inspection.

Where a long (> 3 m) DETACHABLE POWER SUPPLY CORD is supplied, specified or used, the 200 mΩ total protective earth pathway requirement still applies. Therefore, it might be necessary to use a DETACHABLE POWER SUPPLY CORD with conductors of a greater cross sectional area than the minimum required by 8.11.3.3.

If the MANUFACTURER does not supply/specify a DETACHABLE POWER SUPPLY CORD, the RESPONSIBLE ORGANIZATION should take into account the limits of 8.6.4.

Subclause 8.6.4 b)

The fault current could be limited to a relatively low value because of inherent impedance or the characteristic of the power source, for example where the power system is not connected to earth or connected to it via a high impedance (see Figure A.13).

In such cases, the cross-section of the PROTECTIVE EARTH CONNECTION can be determined primarily by mechanical considerations.

Copyright International Electrotechnical Commission
Provided by IHS Markit under license with IEC
No reproduction or networking permitted without license from IHS Not for Resale, 08/26/2020 19:12:41 MDT

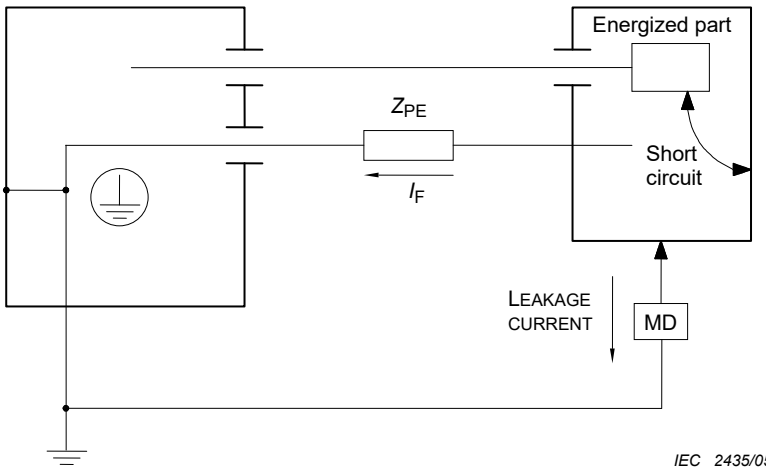

Legend

Z_{PE} = Impedance of PROTECTIVE EARTH CONNECTION in ohms (exceeding the limit specified in 8.6.4 a))

I_F = Maximum continuous prospective fault current in amperes in the PROTECTIVE EARTH CONNECTION caused by a single failure of the insulation to earth

MD Measuring device (see Figure 12)

NOTE The figure shows ME EQUIPMENT having a main ENCLOSURE and a remote part in a separate ENCLOSURE, as an example of a situation where the impedance of a PROTECTIVE EARTH CONNECTION could exceed the limit specified in 8.6.4 a): however this situation could also exist in ME EQUIPMENT having a single ENCLOSURE.

Figure A.12 – Allowable protective earth impedance where the fault current is limited

Subclause 8.6.7 – POTENTIAL EQUALIZATION CONDUCTOR

Medically used rooms in most countries have no facilities for the use of detachable POTENTIAL EQUALIZATION CONDUCTORS. This standard therefore does not require any means to be provided for the connection of a POTENTIAL EQUALIZATION CONDUCTOR to the ME EQUIPMENT. If however the ME EQUIPMENT does have such means, for use in locations where POTENTIAL EQUALIZATION CONDUCTORS are used, the appropriate requirements have to be satisfied.

Subclause 8.6.9 – CLASS II ME EQUIPMENT

This requirement allows a CLASS II ME EQUIPMENT to have a connection to protective earth for functional reasons only. Green/yellow is required to avoid confusion in installation. The allowance does not degrade the degree of protection against electric shock.

The current flowing through the FUNCTIONAL EARTH CONDUCTOR has to be limited in the same way as current in the PROTECTIVE EARTH CONDUCTOR. To prevent the FUNCTIONAL EARTH CONDUCTOR from becoming a PROTECTIVE EARTH CONDUCTOR, the insulation between internal screens including internal wiring connected to them and ACCESSIBLE PARTS needs to provide two MEANS OF PROTECTION.

Subclause 8.7.2 – SINGLE FAULT CONDITIONS

Short circuiting of one part of DOUBLE INSULATION would be likely to increase LEAKAGE CURRENT by a factor of the order of 2. In some cases the test could be difficult to carry out and, as the allowable values for SINGLE FAULT CONDITION are five times those for NORMAL CONDITION, the test would not provide useful information.

Subclause 8.7.3 – Allowable values, Table 3 and Table 4

The value of electric current flowing in the human or animal body that can cause a certain degree of stimulation varies from individual to individual, according to the way in which the

Copyright International Electrotechnical Commission
Provided by IHS Markit under license with IEC
No reproduction or networking permitted without license from IHS Not for Resale, 08/26/2020 19:12:41 MDT

connection to the body is made and according to the frequency of the current applied and its duration.

Currents of low frequency flowing directly into or through the heart considerably increase the danger of ventricular fibrillation. For currents of medium or high frequency, the RISK of electric shock is less or negligible, but the RISK of burning remains.

The sensitivity of the human or animal body to electric currents, depending upon the degree and nature of contact with the ME EQUIPMENT, leads to a system of classification reflecting the degree and quality of protection provided by the APPLIED PARTS (classified as TYPE B APPLIED PARTS, TYPE BF APPLIED PARTS and TYPE CF APPLIED PARTS). TYPE B APPLIED PARTS and TYPE BF APPLIED PARTS are generally suitable for applications involving external or internal contact with the PATIENT, excluding the heart. TYPE CF APPLIED PARTS are suitable for DIRECT CARDIAC APPLICATIONS with regard to LEAKAGE CURRENT.

In conjunction with this classification, the requirements for allowable LEAKAGE CURRENT have been formulated. The absence of sufficient scientific data concerning the sensitivity of the human heart for currents causing ventricular fibrillation still presents a problem.

Nevertheless, the publication of the first edition of this standard in 1977 provided engineers with data enabling them to design ME EQUIPMENT; and these requirements have proved over the years since then to ensure a very low level of RISK without being too onerous for designers.

The requirements for LEAKAGE CURRENT were formulated taking into account:

– that the possibility of ventricular fibrillation is influenced by factors other than only electrical parameters;

– that the values for allowable LEAKAGE CURRENTS in SINGLE FAULT CONDITION should be as high as is considered safe, taking into account statistical considerations, in order not to present designers with unnecessary difficulties; and

– that values for NORMAL CONDITION are necessary to create a safe condition in all situations by providing a sufficiently high safety factor with respect to SINGLE FAULT CONDITIONS.

The measurement of LEAKAGE CURRENTS has been described in a way that enables the use of simple instruments, avoiding different interpretations of a given case and indicating possibilities for periodic checking by the RESPONSIBLE ORGANIZATION.

Allowable values of LEAKAGE and PATIENT AUXILIARY CURRENTS for a.c. and d.c. composite waveforms with frequencies up to and including 1 kHz take account of the following considerations.

~~d~~a) In general the RISK of ventricular fibrillation or pump failure increases with the value or duration, up to a few seconds, of the current passing through the heart. Some areas of the heart are more sensitive than others. That is, a current that causes ventricular fibrillation when applied to one part of the heart could have no effect when applied to another part of the heart.

~~e~~b) The RISK is highest and approximately equal for frequencies in the 10 Hz to 200 Hz range. It is lower, by a factor of nearly 5, at d.c. and by approximately 1,5 at 1 kHz. Beyond 1 kHz, the RISK decreases rapidly [45]. However lower limits are needed for d.c. to prevent tissue necrosis with long-term application.

The values in Table 3 and Table 4 apply to currents measured with the measuring device shown in Figure 12 a), which automatically allows for the reduced sensitivity at higher frequencies. SUPPLY MAINS frequencies of 50 Hz and 60 Hz are in the range of highest RISK.

~~f~~c) Although as a general rule requirements in a general standard are less restrictive than the requirements in particular standards, some of the allowable values in Table 3 and Table 4 have been set at such a value that:

Copyright International Electrotechnical Commission
Provided by IHS Markit under license with IEC
No reproduction or networking permitted without license from IHS
Not for Resale, 08/26/2020 19:12:41 MDT

– the majority of ME EQUIPMENT types can comply, and

– they can be applied to most ME EQUIPMENT types (existing or future) for which no particular standards exist.

EARTH LEAKAGE CURRENT

The EARTH LEAKAGE CURRENT flowing through the PROTECTIVE EARTH CONDUCTOR is not a HAZARD per se. The PATIENT and OPERATOR are protected by specifying appropriately low values for PATIENT LEAKAGE CURRENT and TOUCH CURRENT in NORMAL CONDITION and in relevant SINGLE FAULT CONDITIONS including interruption of the PROTECTIVE EARTH CONDUCTOR. However, an excessive EARTH LEAKAGE CURRENT could pose a possible problem for the installation's earthing system and any circuit breakers operated by current imbalance detectors.

See also IEC 60364-7-710 [10].

TOUCH CURRENT

The limits are based on the following considerations.

~~g~~d) The TOUCH CURRENT of ME EQUIPMENT is subject to the same values regardless of the type(s) of APPLIED PARTS, if any, because even ME EQUIPMENT that does not itself have a TYPE CF APPLIED PART could be used in situations where intracardiac PROCEDURES are performed.

~~h~~e) Although TOUCH CURRENT flows from parts other than PATIENT CONNECTIONS, it can reach the PATIENT by chance contact through various paths, including a path via the OPERATOR.

~~i~~f) The current density created at the heart by current entering the chest is 50 μA/mm^2 per ampere [46]. The current density at the heart for 500 μA (maximum allowable value in SINGLE FAULT CONDITION) entering the chest is 0,025 μA/mm^2, well below the level of concern.

~~j~~g) The probability of the TOUCH CURRENT flowing through the heart and causing ventricular fibrillation or pump failure.

TOUCH CURRENT could conceivably reach an intracardiac site if careless PROCEDURES are used in handling intracardiac conductors or fluid filled catheters. Such devices should always be handled with great care and always with dry rubber gloves. The following RISK ANALYSIS is based on pessimistic assumptions about the degree of care exercised.

The probability of a direct contact between an intracardiac device and an ME EQUIPMENT ENCLOSURE is considered to be very low, perhaps 1 in 100 medical procedures. The probability of an indirect contact via the medical staff is considered to be somewhat higher, say 1 in 10 medical procedures. The maximum allowable LEAKAGE CURRENT in NORMAL CONDITION is 100 μA, which itself has a probability of inducing ventricular fibrillation of 0,05. If the probability of indirect contact is 0,1 then the overall probability is 0,005. Although this probability would appear undesirably high, it should be recalled that with correct handling of the intracardiac device this probability can be reduced to that for mechanical stimulation alone, 0,001.

The probability of the TOUCH CURRENT rising to the maximum allowable level of 500 μA (SINGLE FAULT CONDITION) is considered to be 0,1 in departments with poor maintenance PROCEDURES. The probability of this current causing ventricular fibrillation is taken as 1.

The probability of accidental contact directly with the enclosure is, as above, considered as 0,01, giving an overall probability of 0,001, equal to the mechanical stimulation alone probability.

The probability of TOUCH CURRENT at the maximum allowable level of 500 μA (SINGLE FAULT CONDITION) being conducted to an intracardiac device via the medical staff is 0,01 (0,1 for the SINGLE FAULT CONDITION, 0,1 for accidental contact). Since the probability of this current causing ventricular fibrillation is 1, the overall probability is also 0,01. Again this probability

Copyright International Electrotechnical Commission
Provided by IHS Markit under license with IEC
No reproduction or networking permitted without license from IHS Not for Resale, 08/26/2020 19:12:41 MDT

is high; however it can be brought down to the mechanical stimulation alone probability of 0,001 by adequate medical procedures.

kh) The probability of the TOUCH CURRENT being perceptible to the PATIENT.

The probability of 500 μA being perceptible is 0,01 for men and 0,014 for women when using grip electrodes with intact skin [45] [48]. There is a higher perceptibility for current passing through mucous membranes or skin punctures [48]. Since distribution is normal, there will be a probability that some PATIENTS will perceive very small currents. One person is reported to have sensed 4 μA passing through a mucous membrane [48].

PATIENT LEAKAGE CURRENT

The allowable value of PATIENT LEAKAGE CURRENT for ME EQUIPMENT with TYPE CF APPLIED PARTS in NORMAL CONDITION is 10 μA, which has a probability of 0,002 for causing ventricular fibrillation or pump failure when applied through small areas to an intracardiac site.

Even with zero current, it has been observed that mechanical irritation can produce ventricular fibrillation [50]. A limit of 10 μA is readily achievable and does not significantly increase the RISK of ventricular fibrillation during intracardiac procedures.

The 50 μA maximum allowed in SINGLE FAULT CONDITION for ME EQUIPMENT with TYPE CF APPLIED PARTS is based on a value of current that has been found, under clinical conditions, to have a very low probability of causing ventricular fibrillation or interference with the pumping action of the heart.

For catheters 1,25 mm - 2 mm diameter likely to contact the myocardium, the probability of 50 μA causing ventricular fibrillation is near 0,01 (see Figure A.14 and its explanation). Small cross-section area (0,22 mm^2 and 0,93 mm^2) catheters used in angiography have higher probabilities of causing ventricular fibrillation or pump failure if placed directly on sensitive areas of the heart.

The overall probability of ventricular fibrillation being caused by PATIENT LEAKAGE CURRENT in SINGLE FAULT CONDITION is 0,001 (0,1 for probability of SINGLE FAULT CONDITION, 0,01 probability of 50 μA causing ventricular fibrillation) equal to the probability for mechanical stimulation alone.

The 50 μA current allowed in SINGLE FAULT CONDITION is not likely to result in a current density sufficient to stimulate neuromuscular tissues nor, if d.c., cause necrosis.

For ME EQUIPMENT with TYPE B APPLIED PARTS and TYPE BF APPLIED PARTS where the maximum allowable PATIENT LEAKAGE CURRENT under SINGLE FAULT CONDITION is 500 μA, the same rationale applies as that for TOUCH CURRENT since this current will not flow directly to the heart.

As the existence of an earth connection to a PATIENT is a NORMAL CONDITION, not only PATIENT AUXILIARY CURRENT but also PATIENT LEAKAGE CURRENT can flow for a prolonged period. A very low value of direct current is therefore necessary to avoid tissue necrosis, regardless of the classification of the APPLIED PART.

The appearance of MAINS VOLTAGE, from a low-impedance source, on the PATIENT CONNECTIONS of an F-TYPE APPLIED PART would have to be caused by a double failure of protective means in other ME EQUIPMENT, simultaneously connected to the PATIENT and complying with this standard or another IEC standard, or by a single failure of protective means in equipment not complying with a standard. As such this condition is extremely unlikely in good medical practice.

However the appearance of a lesser voltage, or of a LEAKAGE CURRENT from a source having an open-circuit voltage of the order of MAINS VOLTAGE, is possible.

Since the main safety feature of ME EQUIPMENT with an F-TYPE APPLIED PART is that the PATIENT is not earthed by the connection to the ME EQUIPMENT, the electrical separation of an F-TYPE

Copyright International Electrotechnical Commission
Provided by IHS Markit under license with IEC
No reproduction or networking permitted without license from IHS Not for Resale, 08/26/2020 19:12:41 MDT

APPLIED PART from earth is to have a minimum quality. This is assured by the requirement that, even if a hypothetical voltage of supply frequency and equal to the highest supply voltage to earth present in the location where the ME EQUIPMENT is used would appear on the PATIENT CONNECTIONS, the limit for the PATIENT LEAKAGE CURRENT would not be exceeded.

For TYPE CF APPLIED PARTS, the PATIENT LEAKAGE CURRENT will be limited to 50 μA, no worse than the previously discussed SINGLE FAULT CONDITION.

For TYPE BF APPLIED PARTS the maximum PATIENT LEAKAGE CURRENT under these conditions is 5 mA. Even this value entering the chest would produce only a current density at the heart of 0,25 μA/mm^2. This current would be very perceptible to the PATIENT, however the probability of its occurrence is very low. The RISK of harmful physiological effects is small and the MAXIMUM MAINS VOLTAGE used for this test represents a worst case, more severe than is likely to arise in practice.

Total PATIENT LEAKAGE CURRENT

The values of PATIENT LEAKAGE CURRENT in this standard are for a single function of a TYPE B APPLIED PART or TYPE BF APPLIED PART or a single PATIENT CONNECTION of a TYPE CF APPLIED PART. With multiple functions or multiple APPLIED PARTS the total PATIENT LEAKAGE CURRENT could be much higher. This total PATIENT LEAKAGE CURRENT is the vector sum of the individual PATIENT LEAKAGE CURRENTS. Therefore, it is necessary to specify limits for total PATIENT LEAKAGE CURRENT. These requirements are derived from IEC 60601-2-49:2001 [16].

This standard does not fix the number of APPLIED PARTS connected to a single PATIENT. It has been estimated that the number of APPLIED PARTS connected to a single PATIENT ranges from one to five.

Total PATIENT LEAKAGE CURRENT for TYPE CF APPLIED PARTS

For TYPE CF APPLIED PARTS the PATIENT LEAKAGE CURRENT for the NORMAL CONDITION is 10 μA. The following is to be considered for multiple PATIENT functions:

~~l~~i) The current entering the heart is distributed over all of the PATIENT CONNECTIONS and is not applied to the same small sensitive area of the cardiac tissue.

~~m~~j) The number of PATIENT CONNECTIONS connected directly to cardiac tissue is not likely to exceed three. Accordingly, the LEAKAGE CURRENT entering a single small area of the heart is less than 50 μA and is in the vicinity of 15 μA to 20 μA for an algebraic summation of the currents. The current would be less for a vector summation. The probability of ventricular fibrillation, according to the rationale for PATIENT LEAKAGE CURRENT, is in the range of 0,003 even if all the PATIENT CONNECTIONS are very close together. This is not much different from the probability of 0,002 that is accepted for a single APPLIED PART connected directly to the heart.

~~n~~k) The LEAKAGE CURRENT from APPLIED PARTS on the surface of the body flows in a distributed manner through the body. According to the rationale for PATIENT LEAKAGE CURRENT, 5 mA entering the chest produces a current density at the heart of 0,025 μA/mm^2.

Therefore, 50 μA for NORMAL CONDITION for total PATIENT LEAKAGE CURRENT is considered acceptable.

For SINGLE FAULT CONDITION the LEAKAGE CURRENT for TYPE CF ~~EQUIPMENT~~ APPLIED PARTS has been increased to 0,1 mA. The rationale for PATIENT LEAKAGE CURRENT gives a probability of 0,07 of ventricular fibrillation for current directly entering the heart. The probability of a SINGLE FAULT CONDITION was given as 0,1. This was over a decade ago. Because of improvements in design, more reliable components, better materials, and the use of RISK MANAGEMENT in accordance with ISO 14971 and the consequent use of associated tools, such as HAZARD based RISK ANALYSIS, the probability of a SINGLE FAULT CONDITION should be much less. It is now felt to be in the vicinity of at least 0,02. The probability of ventricular fibrillation is 0,07 × 0,02, or 0,0014, close to that accepted for a single TYPE CF APPLIED PART.

Copyright International Electrotechnical Commission
Provided by IHS Markit under license with IEC
No reproduction or networking permitted without license from IHS
Not for Resale, 08/26/2020 19:12:41 MDT

Total PATIENT LEAKAGE CURRENT for TYPE BF APPLIED PARTS

The total PATIENT LEAKAGE CURRENT has been increased to 500 μA for NORMAL CONDITION and to 1 000 μA for SINGLE FAULT CONDITION. As explained in ~~c)~~ k) above, the current density at the heart for current of 5 000 μA is quite small. There should be no concern for either the NORMAL CONDITION or the SINGLE FAULT CONDITION.

Total PATIENT LEAKAGE CURRENT caused by an external voltage on the PATIENT CONNECTION

For TYPE CF APPLIED PARTS, the limit has been increased to 100 μA. The rationale for PATIENT LEAKAGE CURRENT states that the probability of failure of protective earthing of CLASS I ME EQUIPMENT is 0,1 and that the probability of a fault in one MOP is less than 0,1. This was a decade ago. As explained earlier, these probabilities should be much lower today and are considered to be no worse than 0,02. The probability of MAINS VOLTAGE appearing on the PATIENT is 0,02 × 0,02, or 0,0004. This is below the probability of 0,001 accepted in the second edition of IEC 60601-1.

PATIENT AUXILIARY CURRENT

The allowable values for PATIENT AUXILIARY CURRENT are based on similar considerations to those for PATIENT LEAKAGE CURRENT. They apply regardless of whether the PATIENT AUXILIARY CURRENT is necessary for the functioning of the ME EQUIPMENT (e.g. impedance plethysmographs) or incidental to its functioning. Lower values are given for d.c. to prevent tissue necrosis with long-term application.

Copyright International Electrotechnical Commission
Provided by IHS Markit under license with IEC
No reproduction or networking permitted without license from IHS
Not for Resale, 08/26/2020 19:12:41 MDT

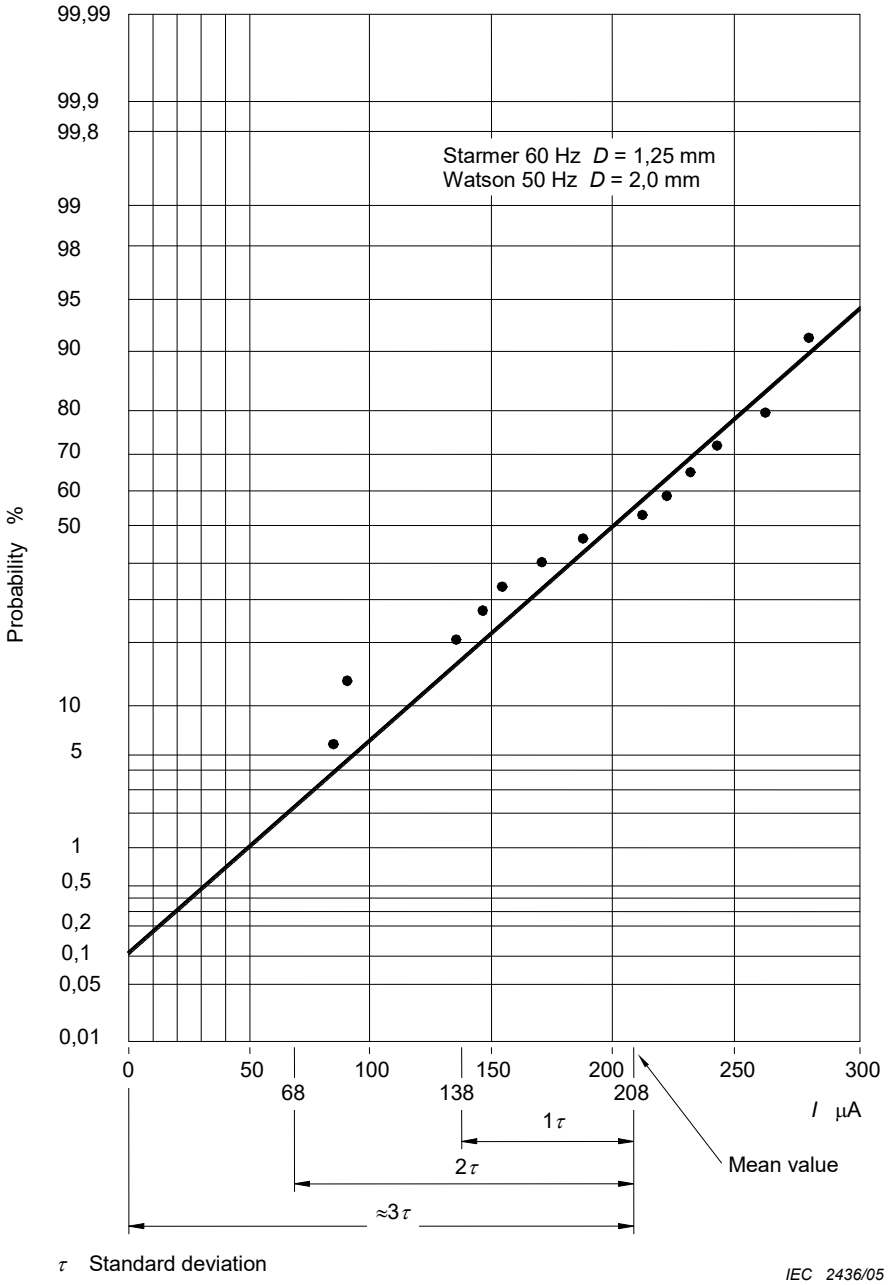

NOTE Refer to original papers by Starmer [53] and Watson [54] for interpretation of data.

Figure A.13 – Probability of ventricular fibrillation

Explanation of Figure A.14

Articles by Starmer [53] and Watson [54] provide data on ventricular fibrillation caused by 50 Hz and 60 Hz currents applied directly to the hearts of human populations with cardiac disease. Fibrillation probability was obtained as a function of the electrode diameter and the magnitude of the current. For electrodes of 1,25 mm and 2 mm diameter and currents up to 0,3 mA, the distribution appears normal. Accordingly, it has been extrapolated to encompass the values commonly used in assessing PATIENT RISK (values noted on Figure A.14). From this extrapolation, it is seen that:

– any value of current, however small, has some probability of causing ventricular fibrillation, and

– the commonly used values have low probabilities, ranging from approximately 0,002 to 0,01.

Copyright International Electrotechnical Commission
Provided by IHS Markit under license with IEC
No reproduction or networking permitted without license from IHS Not for Resale, 08/26/2020 19:12:41 MDT

Since ventricular fibrillation is governed by many factors (PATIENT condition, probability of current entering a more sensitive area of the myocardium, probability of fibrillation as a function of current or current density, physiology, electric field, etc.), it is reasonable to use statistics in determining the possibility of RISK for the multiple conditions.

Heating effect of LEAKAGE CURRENTS

A current of 10 mA will produce no sensation of heating with a typical PATIENT CONNECTION with a contact area of the order of 1 cm^2, but a current a few times higher than this would produce a burn. The RISK of a burn depends on the magnitude of the current but not on its frequency, so the current has to be measured with a non-frequency-weighted device, such as a device similar to that shown in Figure 12 a) but without C_1 and R_1.

Subclause 8.7.3 f)

LEAKAGE CURRENTS can flow through a FUNCTIONAL EARTH CONDUCTOR. This can lead to an unexpected RISK if CLASS II equipment is combined with CLASS I equipment or with an earthed trolley, e.g. using an MSO. Although proper application of the 'rules' for assembling an ME SYSTEM would eliminate this RISK, the causal RISK can be mitigated by limiting the allowed LEAKAGE CURRENT in a FUNCTIONAL EARTH CONDUCTOR.

Subclause 8.7.4.2 – Measuring supply circuits

For correct results of LEAKAGE CURRENT measurements, it is essential to have a common reference point within the measuring circuit. The point also has to be electrically referenced to all parts of the circuit. Also the measured LEAKAGE CURRENT could be different according to the particular supply configuration. For example, if ME EQUIPMENT that is specified for connection to a supply having one side at earth potential is connected instead to a supply having two symmetrical phases (such as a 230 V supply in the USA) the measured LEAKAGE CURRENT will be much lower than the worst case. If the installed SUPPLY MAINS of the room where the measurements are made does not represent the worst case, a specific supply circuit has to be established. This can be done by using an isolating transformer with the appropriate point in the SECONDARY CIRCUIT connected to the reference point. Accurate and reproducible results when making LEAKAGE CURRENT measurements can also be obtained without an isolating transformer. However this would depend on the quality of the SUPPLY MAINS used for the measurements. Factors that need to be considered would include transients, interference signals and voltage differences between neutral and earth in the measuring circuit.

The earth symbols in the figures represent this common reference point, which is not connected to the protective earth of the SUPPLY MAINS. Such a separate reference point can provide additional protection for the person carrying out the measurements.

A variable-voltage transformer is necessary to provide 110 % of the RATED supply voltage to the ME EQUIPMENT. Although it would be possible to test with the MAINS VOLTAGE normally present in the test room and to multiply the measured LEAKAGE CURRENT values by the appropriate factor, this would not always produce the same result as testing with 110 % of the RATED supply voltage, particularly with ME EQUIPMENT that includes a switched-mode power supply.

The switches S_1 or $S_1 + S_2$ or $S_1 + S_2 + S_3$ in Figure F.1 to Figure F.4 (inclusive) can be omitted and the interruptions of the relevant leads can be obtained by other means.

Instead of the single or polyphase isolating transformers with adjustable output voltage(s), as shown in Figure F.1 to Figure F.5 (inclusive), a combination of an isolating transformer with set output voltage and an auto-transformer with adjustable output voltage can be used.

Subclause 8.7.4.3 – Connection to the measuring supply circuit

Although it is not unlikely that ME EQUIPMENT is used while placed on or in an earthed metal environment, such a position would be rather difficult to describe in a way that test results would become reproducible. The advice in the note in 8.7.4.3 d) 1) is therefore to be considered as a convention.

Copyright International Electrotechnical Commission
Provided by IHS Markit under license with IEC
No reproduction or networking permitted without license from IHS Not for Resale, 08/26/2020 19:12:41 MDT

The fact that PATIENT cables can have a significant capacitance to earth is usually important and of considerable influence on test results. A position providing reproducible results is therefore prescribed.

The isolation transformer in the measuring supply circuit provides additional protection for the person making the measurements and increases the accuracy of the LEAKAGE CURRENT measurements. However, it is not absolutely necessary to use an isolating transformer when making LEAKAGE CURRENT measurements. In some cases, such as high input power ME EQUIPMENT and ME SYSTEMS, use of an insolating transformer is not feasible. When making LEAKAGE CUURENT measurement without an isolating transformer, the MANUFACTURER needs to consider the following:

– is it possible to extrapolate the LEAKAGE CURRENTS at 110 % of the RATED supply voltage;
– the influence of currents that are driven by voltage differences between the protective earth and the mains supply neutral of ME EQUIPMENT or for ME SYSTEMS with multiple PROTECTIVE EARTH CONNECTIONS.

Measuring without an isolation transformer can produce LEAKAGE CURRENT readings that are greater than the LEAKAGE CURRENT measurement with an isolating transformer.

Subclause 8.7.4.5 – Measurement of EARTH LEAKAGE CURRENT and current in FUNCTIONAL EARTH CONNECTION

The measuring device represents a measuring method that takes into account the physiological effect of a current through the human body, including the heart, as well as the possibility of a low impedance contact between a PATIENT CONNECTION and the PATIENT. Although IEC 60990 [20] specifies some measuring devices for general use, none of these would be appropriate for measuring PATIENT LEAKAGE CURRENT. As the measuring device of the second edition is being retained for that purpose, it is most convenient to use the same device for all LEAKAGE CURRENT measurements, apart from the measurement of currents or current components with frequencies exceeding 1 kHz in relation to the 10 mA limit specified in 8.7.3 d).

Subclause 8.7.4.6 – Measurement of the TOUCH CURRENT

Where metal foil is to be applied to an ENCLOSURE made of insulating material, intimate contact can be achieved by pressing the foil against the insulating material with a pressure of approximately 5 kPa (0,5 N/cm^2).

Subclause 8.7.4.7 – Measurement of PATIENT LEAKAGE CURRENT

Subclause 8.7.4.7 b)

This test confirms that the separation between the PATIENT CONNECTIONS and other parts is adequate to limit the PATIENT LEAKAGE CURRENT to the allowed value when an external voltage is present.

If the APPLIED PART can be disconnected from the ME EQUIPMENT, it is possible that the contacts of its connector could touch an earthed object, but that situation is covered by thetests of 8.5.2.3, not by 8.7.4.7 b), which applies to the ME EQUIPMENT and the APPLIED PART together.

The 20 cm × 10 cm metal foil represents the size of a human hand. For some ME EQUIPMENT, the area of contact is greater then the size of the hand. In this case, the size of the foil can be increased.

Subclause 8.7.4.7 c)

Some of the tests specified in the second edition of this standard related to the possible presence of MAINS VOLTAGE on a SIGNAL INPUT PART or a SIGNAL OUTPUT PART (as defined in that edition, now covered by the combined term SIGNAL INPUT/OUTPUT PART). There were various exclusions, but if none of the exclusions applied this condition was regarded as a SINGLE FAULT CONDITION. The assumption made in this third edition is that, if the

Copyright International Electrotechnical Commission
Provided by IHS Markit under license with IEC
No reproduction or networking permitted without license from IHS Not for Resale, 08/26/2020 19:12:41 MDT

ACCOMPANYING DOCUMENTS place no restrictions on what other equipment is allowed to be connected to the SIGNAL INPUT/OUTPUT PART, the presence of the MAXIMUM MAINS VOLTAGE should be regarded as a NORMAL CONDITION.

Instead of an isolating transformer T_2 with an adjustable output voltage, a combination of an isolating transformer with a set output voltage and an auto-transformer with an adjustable output voltage can be used.

Subclause 8.7.4.7 d)

The test with an external voltage applied to unearthed metal ACCESSIBLE PARTS reflects the requirement in 8.5.2.2 for isolation between such parts and unearthed PATIENT CONNECTIONS of TYPE B APPLIED PARTS.

For TYPE BF APPLIED PARTS this test applies as well as the test of 8.7.4.7 b), even though both test the isolation between the PATIENT CONNECTIONS and other parts, because the PATIENT LEAKAGE CURRENT might not be the same in these two situations and different limit values apply.

Instead of an isolating transformer T_2 with an adjustable output voltage, a combination of an isolating transformer with a set output voltage and an auto-transformer with an adjustable output voltage can be used.

Care should be taken that the capacitance of the measuring device and its connecting leads to earth and to the body of the ME EQUIPMENT is kept as low as possible.

As explained in the rationale to 8.7.3, the presence of the MAXIMUM MAINS VOLTAGE on a PATIENT represents a worst case, this is more severe than is likely to arise in practice, and the allowable PATIENT LEAKAGE CURRENT for a TYPE BF APPLIED PART in this situation is 5 mA. It was pointed out that the application of MAINS VOLTAGE to an unearthed ACCESSIBLE PART could therefore cause a PATIENT LEAKAGE CURRENT of up to 5 mA to flow from the PATIENT CONNECTIONS of a TYPE BF APPLIED PART; whereas in the same situation a TYPE B APPLIED PART (which in general offers a lower level of safety) was allowed only 500 μA. In order to resolve this anomaly, the test of 8.7.4.7 d), with 110 % of the MAXIMUM MAINS VOLTAGE on unearthed ACCESSIBLE PARTS, also applies to TYPE BF APPLIED PARTS, and in this condition the allowable PATIENT LEAKAGE CURRENT is the general 500 μA value for SINGLE FAULT CONDITION.

There is no need to perform the test of 8.7.4.7 d) on TYPE CF APPLIED PARTS because for these the same allowable value of 50 μA would apply as in the test of 8.7.4.7 b).

Subclause 8.7.4.7 h)

The requirement represents a compromise between requiring extensive testing, which with most ME EQUIPMENT would yield no useful information, and having no specific requirement to address this RISK.

Most TYPE B APPLIED PARTS are earthed, so the measurement according to 8.7.4.7 g) (all PATIENT CONNECTIONS of a single function connected directly together) will give the same result as the measurement according to 8.7.4.7 h) (all PATIENT CONNECTIONS of all APPLIED PARTS of the same type connected together). If this is within the PATIENT LEAKAGE CURRENT limit it will certainly be within the total PATIENT LEAKAGE CURRENT limit. However it is possible to have TYPE B APPLIED PARTS that are not directly earthed, and in that case the measured values can be different.

Subclause 8.7.4.9 – ME EQUIPMENT with multiple PATIENT CONNECTIONS

This requirement was introduced in the second amendment to the second edition of this standard. It addresses a RISK that can arise, for example, with equipment for measuring physiological signals where an amplifier drives one electrode to reduce common-mode interference. If one of the sensing electrodes is disconnected from the PATIENT and picks up a large voltage at mains frequency, the amplifier could drive a large current into the PATIENT in a vain attempt to cancel the interference.

Copyright International Electrotechnical Commission
Provided by IHS Markit under license with IEC
No reproduction or networking permitted without license from IHS Not for Resale, 08/26/2020 19:12:41 MDT

The requirement represents a compromise between requiring extensive testing, which with most ME EQUIPMENT would yield no useful information, and having no specific requirement to address this RISK.

Subsequently IEC 60601-2-49:2001 [16] introduced a comprehensive set of tests, to be performed on all equipment within the scope of that standard. These include measurement of what is termed "PART LEAKAGE CURRENT" in that standard: this is the current flowing between the PATIENT CONNECTIONS of one function and the PATIENT CONNECTIONS of other function(s), which is covered in this edition of the general standard by the revised definition of PATIENT AUXILIARY CURRENT.

Consideration was given to incorporating these tests in this general standard, but it was decided that such specific testing should be left to particular standards. The scenarios to which they relate, such as having the PATIENT CONNECTIONS of one function in use and connected to the PATIENT while the PATIENT CONNECTIONS of another function are not in use and could make contact with earth or other objects, are likely to arise with multifunction PATIENT monitoring equipment but unlikely with most other kinds of ME EQUIPMENT.

Figure A.15, based on Figure KK.101 of IEC 60601-2-49:2001 [16], shows an example of measuring the PATIENT LEAKAGE CURRENT from one function of a TYPE BF APPLIED PART while the PATIENT CONNECTIONS of another function of the same APPLIED PART and of two TYPE CF APPLIED PARTS are either floating or earthed.

Subclause 8.8.1 – General

Care should be taken that the voltage applied to a REINFORCED INSULATION does not overstress either of the MEANS OF PROTECTION in the ME EQUIPMENT. If there are multiple paths between the same points, these might need to be tested separately. There could, for example, be one path from the MAINS PART to a PATIENT CONNECTION that has BASIC INSULATION plus a PROTECTIVE EARTH CONNECTION plus PATIENT CONNECTIONS isolation as required by 8.5.2.1, and a parallel path having REINFORCED INSULATION. ME EQUIPMENT parts might need to be disconnected to allow the REINFORCED INSULATION to be tested without overstressing the separate insulation of the MAINS PART or the PATIENT CONNECTIONS.

This could be avoided, for example in the case of a transformer, by the use of a voltage divider with a tapping point connected to the core or some other suitable connecting point to ensure the correct voltage division over the actual insulations, or by the use of two test transformers, correctly phased.

Copyright International Electrotechnical Commission
Provided by IHS Markit under license with IEC
No reproduction or networking permitted without license from IHS Not for Resale, 08/26/2020 19:12:41 MDT

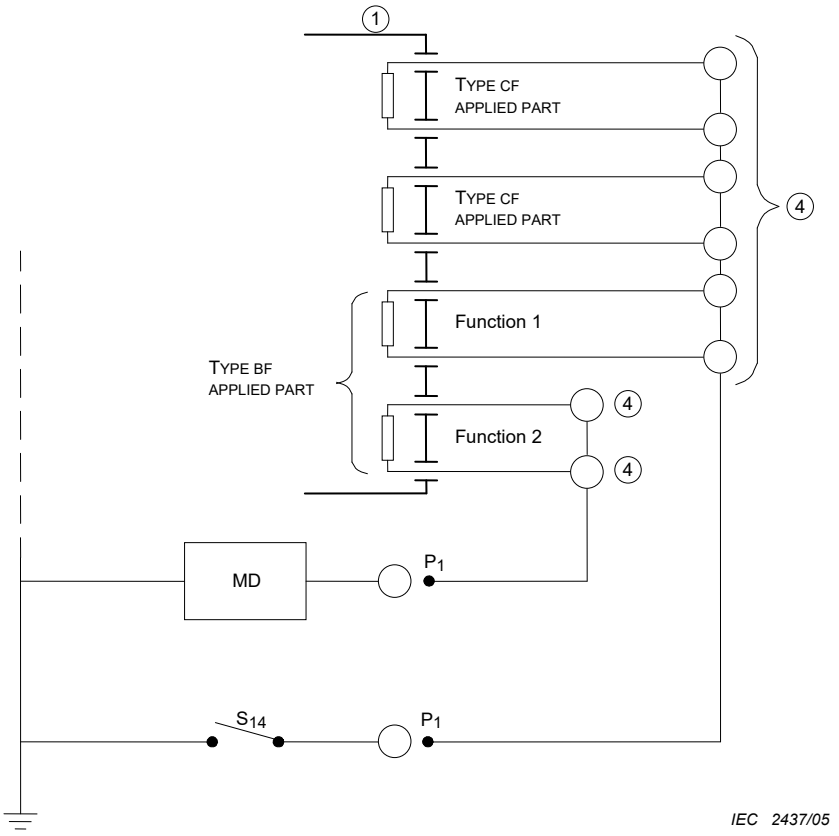

For legends, see Table 5.

Key

All measurements are made with S_{14} closed and again with S_{14} open.

Figure A.14 – Example of a measuring circuit for the PATIENT LEAKAGE CURRENT from a PATIENT CONNECTION to earth for ME EQUIPMENT with multiple PATIENT CONNECTIONS

Subclause 8.8.2 – Distance through solid insulation or use of thin sheet material

The second edition of this standard placed no restrictions on the thickness of solid insulation, except as specified in 57.9.4 e) for transformers and for the need for all insulation covered by Clause 20 to be thick enough to pass the dielectric strength test. A very thin film of insulating material might pass that test but might not provide reliable insulation during the EXPECTED SERVICE LIFE of all production items.

Some National Committee comments during the development of this edition proposed introducing relevant requirements derived from IEC 60950-1 to address this omission. Both WG 14 (Testing) and WG 16 (Electrical hazards) recommended accepting these proposals.

These requirements have been included in IEC 60950-1 for many years without causing problems. They should not be onerous in practice for ME EQUIPMENT, and indeed most ME EQUIPMENT designed according to the previous editions of this standard would have satisfied them.

The requirements that have been introduced are intended to be technically equivalent to those of IEC 60950-1:2005, but the editorial structure has been changed for clarity, as follows.

– IEC 60950-1:2005 specifies a general requirement for distance through insulation, with an exception for voltages up to 71 V. This has been changed to state explicitly that the requirement applies above 71 V.

– IEC 60950-1:2005 specifies an exception from the requirement for distance through insulation where the requirements for thin sheet material apply, as set out in another

Copyright International Electrotechnical Commission
Provided by IHS Markit under license with IEC
No reproduction or networking permitted without license from IHS Not for Resale, 08/26/2020 19:12:41 MDT

subclause, but that subclause does not refer explicitly to the 71 V limit. This has been made explicit by stating the requirements for thin sheet material as an alternative to the thickness requirement, under the same introductory wording.

– IEC 60950-1:2005 specifies that “Insulation in thin sheet materials is permitted . . provided that” certain conditions are satisfied. This has been changed to an explicit requirement that insulation in thin sheet materials needs to satisfy these conditions.

– IEC 60950-1:2005 requires that insulation in thin sheet materials “is used within the equipment ENCLOSURE”. However the ENCLOSURE as defined in this standard includes all outer surfaces, including the surfaces of cables, APPLIED PARTS, etc. The requirement has therefore been rephrased.

Elsewhere in this standard the terms SUPPLEMENTARY INSULATION and REINFORCED INSULATION have mostly been replaced by references to MEANS OF PROTECTION, but they have been retained here because, as in IEC 60950-1:2005, the requirements concerning distance through insulation and the use of thin sheet material apply to SUPPLEMENTARY INSULATION and to REINFORCED INSULATION, but not to BASIC INSULATION. Thus these requirements do not apply where BASIC INSULATION, as one MEANS OF PROTECTION, is used in conjunction with a PROTECTIVE EARTH CONNECTION as the other MEANS OF PROTECTION. Where DOUBLE INSULATION is used, these requirements apply to whichever constituent part thereof is regarded as the SUPPLEMENTARY INSULATION.

Subclause 8.8.3 – Dielectric strength

Components designed to limit the voltage might need to be removed in order to allow the full test voltage to be applied to the insulation being tested.

The purpose of this test is to check all solid insulation under the worst-case condition after having achieved operating temperature. For heating elements, the worst case is achieved with heaters remaining energized during measurement.

The test voltages specified are appropriate for solid insulation only. Spacings (CREEPAGE DISTANCES and CLEARANCES) are evaluated by 8.9. IEC 60664-1 gives details of electrical test methods for clearances using impulse voltage dielectric strength tests. These tests can be used under the IEC 60950-1 route for MOOPs, but are not specified for MOPPs. IEC 60664-1 states that the 2U + 1 000 V type of dielectric strength test “is not relevant for the testing of clearances”.

Since the dielectric strength test is applied immediately after the humidity preconditioning treatment, with the ME EQUIPMENT still in the humidity cabinet, adequate precautions for the protection of laboratory personnel could be necessary.

In Table 6, the values for OPERATOR protection are taken from IEC 60950-1:2005 and the values for PATIENT protection are taken from the second edition of IEC 60601-1. In constructing the table, three principles were employed:

– MOPP are always at a higher value than MOOP.

– Mains circuits are effected by transient overvoltages as detailed in Table 10. In SECONDARY CIRCUITS, the transient overvoltage level is at least one level less than the mains circuits.

– The value of test voltage is primarily determined by the transient voltage on the SUPPLY MAINS which is usually orders of magnitude larger than the WORKING VOLTAGE.

In order to align with the second edition of IEC 60601-1 for the common WORKING VOLTAGE of 220 V r.m.s to 240 V r.m.s. the test voltage of 4 000 V r.m.s. was retained even though this value is more that twice the test voltage for one MOPP. However, each individual MOPP has to meet the 1 500 V r.m.s. minimum requirement.

Copyright International Electrotechnical Commission
Provided by IHS Markit under license with IEC
No reproduction or networking permitted without license from IHS Not for Resale, 08/26/2020 19:12:41 MDT

Information regarding the incorporation of requirements from IEC 62368-1:2018 in Amendment 2:

According to IEC 62368-1:2018, the minimum dielectric strength requirement for mains operated equipment with a mains supply voltage up to and including 250 V r.m.s for REINFORCED INSULATION (2 MOOP) is 4 kV (IEC 62368-1:2018, Table 27). Table 6 was analyzed, and it was determined that a WORKING VOLTAGE (peak or d.c.) up to 1 293 V requires a dielectric strength test of less than or equal to 4 kV peak for 1 MOPP.

According to IEC 62368-1:2018, the minimum dielectric strength requirement for mains operated equipment with a mains supply voltage above 250 V r.m.s up to and including 600 V r.m.s. for REINFORCED INSULATION (2 MOOP) IS 5 kV (IEC 62368-1:2018, Table 27). Table 6 was analyzed, and it was determined that a WORKING VOLTAGE (peak or d.c.) up to 2 172 V requires a dielectric strength test of less than or equal to 5 kV peak for 1 MOPP.

For higher PEAK WORKING VOLTAGES, information regarding the equipment/sub-assembly/component that was tested according to IEC 62368-1:2018 needs to be reviewed to determine if the applied electric strength test (IEC 62368-1:2018, Table 25 to Table 27 (inclusive)) for REINFORCED INSULATION meets the minimum requirement from Table 6 if 1 MOPP is necessary.

A direct comparison between the requirements of this standard and IEC 62368-1:2018 for dielectric strength (electric strength is the term used in IEC 62368-1:2018) is not possible without knowing the reference “voltage”. The “voltage” is either the expected transient voltage (IEC 62368-1:2018, Table 25), peak of the working voltage and recurring peak voltages (IEC 62368-1:2018, Table 26) or the temporary overvoltage (IEC 62368-1:2018, Table 27). Knowing these voltages allows the values from each table to be determined, the requirement applied is the highest value from the three tables; but for equipment connected to a nominal SUPPLY MAINS system up to and including 250 V r.m.s., the minimum test voltage will be 4 kV peak and for a nominal SUPPLY MAINS system voltage above 250 V r.m.s up to and including 600 V r.m.s. the minimum test voltage will be 5 kV peak.

Subclause 8.8.3 a)

The test voltage can be provided by a transformer, by a d.c. power source or by using the transformer(s) of the ME EQUIPMENT. In the last case, to prevent overheating, the test voltage can have a frequency that is higher than the RATED frequency of the ME EQUIPMENT.

The PROCEDURE and duration of the test for WORKING VOLTAGE equal to or higher than 1 000 V a.c. or 1 500 V d.c. or peak values can be specified further by particular standards.

Subclause 8.8.4.1 – Mechanical strength and resistance to heat

Tests concerning flammability of materials will be found in IEC 60695-11-10.

Subclause 8.9 – CREEPAGE DISTANCES and AIR CLEARANCES

For ME EQUIPMENT intended to be supplied from the SUPPLY MAINS, AIR CLEARANCE and dielectric strength requirements are based on the expected overvoltage transients that could enter the equipment from the SUPPLY MAINS. According to IEC 60664-1, the magnitude of these transients is determined by the normal supply voltage and the supply arrangements. These transients are categorized according to IEC 60664-1 into four groups called overvoltage categories I to IV (also known as installation categories I to IV). Elsewhere in this standard overvoltage category II is assumed.

The design of solid insulation and AIR CLEARANCES should be co-ordinated in such a way that, if an incident overvoltage transient exceeds the limits of overvoltage category II, the solid insulation can withstand a higher voltage than the AIR CLEARANCES.

The values in Table 13 to Table 15 correspond to those of IEC 60950-1:2005 for overvoltage category II for MAINS PARTS and overvoltage category I for SECONDARY CIRCUITS. If

Copyright International Electrotechnical Commission
Provided by IHS Markit under license with IEC
No reproduction or networking permitted without license from IHS Not for Resale, 08/26/2020 19:12:41 MDT

ME EQUIPMENT is intended to be used in locations where the SUPPLY MAINS is in overvoltage category III or IV, these values will be inadequate.

A SECONDARY CIRCUIT derived from a SUPPLY MAINS will normally be overvoltage category I if the SUPPLY MAINS is overvoltage category II; the maximum transients for various SUPPLY MAINS voltages in overvoltage category I are shown in the column headings of Table 13.

For insulation between the ENCLOSURE and the PATIENT CONNECTION of an F-TYPE APPLIED PART special rules apply:

1) In the case of an F-TYPE APPLIED PART containing no voltage difference, the insulation between the PATIENT CONNECTIONS and the ENCLOSURE will only be stressed to the MAINS VOLTAGE in the case of a fault in other equipment connected to the PATIENT.

   This condition rarely occurs; furthermore this insulation is not normally subject to the transient overvoltages found in the MAINS PART. In view of the above, the insulation necessary between the APPLIED PART and the ENCLOSURE for the case quoted, need only satisfy the requirements for BASIC INSULATION.

2) In the case of an F-TYPE APPLIED PART containing parts with voltage difference, the connection of a PATIENT CONNECTION to earth via an earthed PATIENT (NORMAL CONDITION) could subject the insulation between other parts and the ENCLOSURE to the whole of the voltage within the APPLIED PART.

   Since this voltage appears in NORMAL CONDITION, even though infrequently, the relevant insulation should satisfy the requirements for DOUBLE INSULATION or REINFORCED INSULATION. ~~In view of the low probability of this condition occurring, the CREEPAGE DISTANCES and AIR CLEARANCES given in Table 11 are considered adequate.~~

3) The value to be applied is the highest of the values found according to Items 1) and 2) above.

In the absence of a theoretical background to refer to, it was decided that the values above 1 000 V would be drawn from Table 7 of IEC 61010-1:2001 [22] for CREEPAGE DISTANCES using the column for material group IIIa-b, pollution degree 3, which correlates with the existing values in the second edition of IEC 60601-1 or is slightly more onerous. For AIR CLEARANCES, the values have been estimated based on the relationship between creepage and clearance for values below 1 000 V r.m.s. from Table 12. These derived values are shown in Table A.1.

Table 16 of the second edition of IEC 60601-1 was split into ~~two~~ five tables in this standard (~~Tables 9 and 10~~ Table 12 to Table 16 inclusive). To align it with tables derived from other standards such as IEC 60950-1, the factor between the a.c. voltages and the d.c. voltages was changed from 1,2 to about 1,4. This relaxation was accepted as it is a common approach in other standards and it prevents having different CREEPAGE DISTANCES or AIR CLEARANCES in circuits where there is a d.c. voltage rectified from an a.c. voltage.

Copyright International Electrotechnical Commission
Provided by IHS Markit under license with IEC
No reproduction or networking permitted without license from IHS
Not for Resale, 08/26/2020 19:12:41 MDT

Table A.1 – Values of AIR CLEARANCE and CREEPAGE DISTANCE derived from Table 7 of IEC 61010-1:2001 and Table 12

WORKING VOLTAGE V d.c. up to and including	WORKING VOLTAGE V r.m.s up to and including	Spacing providing one MEANS OF PATIENT PROTECTION		Spacing providing two MEANS OF PATIENT PROTECTION	
		AIR CLEARANCE mm	CREEPAGE DISTANCE mm	AIR CLEARANCE mm	CREEPAGE DISTANCE mm
1 500	1 250	11,5	20	23,0	40
1 920	1 600	14,5	25	29,0	50
2 400	2 000	18,5	32	37,0	64
3 000	2 500	23,0	40	46,0	80
3 840	3 200	29,0	50	58,0	100
4 800	4 000	36,0	63	72,0	126
6 000	5 000	46,0	80	92,0	160
7 560	6 300	57,0	100	114,0	200
9 600	8 000	71,5	125	143,0	250
12 000	10 000	91,5	160	183,0	320

Table A.2 contains CREEPAGE DISTANCES for WORKING VOLTAGE above 1 000 V derived from IEC 60664-1:2007, Table ~~4~~ F.4.

Subclause 8.9.1 – Values

When using the values of CREEPAGE DISTANCE and AIR CLEARANCE, it should be noted that peak, d.c. and r.m.s. values are all used. It is important to read the tables carefully.

The tables for MOOPs use values from IEC 60950-1:2005 representing the following basic principles, taken from IEC 60664-1:

– "The basis for the determination of a CREEPAGE DISTANCE is the long-term r.m.s. value of the voltage existing across it."

– "AIR CLEARANCES shall be dimensioned to withstand the required impulse withstand voltage". Impulse withstand voltage is the "highest peak value of withstand voltage ...."

However, the tables for MOPPs are taken from the second edition of IEC 60601-1, where both creepages and clearances were related to r.m.s. or d.c. voltages.

--`,,`,,`-`-`,,`,,`,`,,`---
Copyright International Electrotechnical Commission
Provided by IHS Markit under license with IEC
No reproduction or networking permitted without license from IHS
Not for Resale, 08/26/2020 19:12:41 MDT

Table A.2 – CREEPAGE DISTANCES to avoid failure due to tracking from IEC 60664-1

WORKING VOLTAGE V r.m.s or d.c.	Spacing for one MEANS OF OPERATOR PROTECTION						
	Pollution degree 1	Pollution degree 2			Pollution degree 3		
	Material group	Material group			Material group		
	I, II, IIIa, IIIb	I	II	IIIa or IIIb	I	II	IIIa or IIIb
1 250	Use the AIR CLEARANCE from the appropriate table	6,3	9,0	12,5	16,0	18,0	20,0
1 600		8,0	11,0	16,0	20,0	22,0	25,0
2 000		10,0	14,0	20,0	25,0	28,0	32,0
2 500		12,5	18,0	25,0	32,0	36,0	40,0
3 200		16,0	22,0	32,0	40,0	45,0	50,0
4 000		20,0	28,0	40,0	50,0	56,0	63,0
5 000		25,0	36,0	50,0	63,0	71,0	80,0
6 300		32,0	45,0	63,0	80,0	90,0	100,0
8 000		40,0	56,0	80,0	100,0	110,0	125,0
10 000		50,0	71,0	100,0	125,0	140,0	160,0

Subclause 8.9.1.2 – CREEPAGE DISTANCES and AIR CLEARANCES complying with IEC 60950-1 or IEC 62368-1

During the review of the differences between the requirements of this standard and IEC 62368-1:2018 a scenario was identified where the AIR CLEARANCE values required by IEC 62368-1:2018 could be significantly lower than the values currently required by this standard for MOOP. It was determined that this scenario would lead to AIR CLEARANCE values that are too small for ME EQUIPMENT and that sub-assemblies/components utilizing this construction would not be acceptable as part of ME EQUIPMENT.

This scenario is specific to sub-assemblies/components specifically designed for use with a SUPPLY MAINS that is free from transient voltages. For example, a d.c. power supply in an ambulance that is used to generate a 240 V r.m.s. supply voltage (transient free). In this example, following the requirements from IEC 62368-1:2018, Table 10 and Table 14 (Procedure 1 and Procedure 2) would give the required AIR CLEARANCE of 0,4 mm due to the nature of the supply (transient free).

IEC 60601-1 applies the same requirements to SUPPLY MAINS regardless of the existence of transient overvoltages in the SUPPLY MAINS. In this scenario the requirement for AIR CLEARANCE for 2 MOOP would be 4,0 mm for primary circuits (Table 13, Row 2). Given the large difference in requirements, it has been determined that sub-assemblies/components designed specifically for use in transient-free SUPPLY MAINS that have been evaluated for compliance with IEC 62368-1:2018 alone would not be acceptable and the requirements of Table 12 to Table 16 (inclusive) would additionally apply.

It is acknowledged that the probability of a sub-assembly/component being designed specifically for this application is likely to be low. Additionally, any sub-assembly/component (e.g. power supply) that was intended for a traditional SUPPLY MAINS connection would meet the higher requirements based on the transient voltage or temporary overvoltage and would be acceptable.

Copyright International Electrotechnical Commission
Provided by IHS Markit under license with IEC
No reproduction or networking permitted without license from IHS Not for Resale, 08/26/2020 19:12:41 MDT

Subclause 8.9.1.6 – Interpolation

Interpolation for CREEPAGE DISTANCES but not for AIR CLEARANCES is allowed, except where the WORKING VOLTAGE is above 2 kV r.m.s. or 2,8 kV d.c. This approach is generally consistent with IEC 60950-1 and IEC 61010-1 [22].

Subclause 8.9.1.15 – CREEPAGE DISTANCES and AIR CLEARANCES for DEFIBRILLATION-PROOF APPLIED PARTS

From IEC 60664-1:2007, Table ~~2~~ F.2, a distance of 4 mm is adequate for pulses of 5 kV having a short duration of less than 10 ms, such voltages arising typically from the use of a defibrillator.

Subclause 8.9.2 – Application

Subclause 8.9.2 a)

Depending on the INTENDED USE of the ME EQUIPMENT, operation of the fuse or OVER-CURRENT RELEASE can be a HAZARD. The opening of a branch circuit breaker is not acceptable. Subclause 8.9.2 a) is based on the fact that there is an over-current device in the input of the ME EQUIPMENT before the part of the circuit where this subclause is applied. Before this over-current device, the spacings need to comply with the basic requirement for parts of opposite polarity within the MAINS PART.

Subclause 8.9.3 – Spaces filled by insulating compound

CREEPAGE DISTANCES are measured through the joint between two parts of an insulation barrier, except for cemented joints, i.e. those in which:

– either the two parts forming the joint are bonded by heat sealing or other similar means at the place where this is of importance;

– or the joint is completely filled with adhesive at the necessary places and the adhesive bonds to the surfaces of the insulating barrier so that humidity cannot be sucked into the joint.

In the second edition of this standard, the captions to Figures 43 to 45 referred to “uncemented joints.” Item 7 of the legends to these figures referred to 57.9.4 f), second dash, “for a description of cemented joints” but did not specify any test methods other than inspection. During the preparation of this edition, it was proposed to introduce relevant requirements derived from IEC 60950-1:2005 to address the related subject of potting.

The requirements that have been introduced are closely based on those of IEC 60950-1:2005 and cover potting, encapsulation, cemented joints, etc. The editorial structure has been somewhat revised from that of IEC 60950-1:2005 for clarity. These requirements have been included in 8.9 rather than 8.8 because they specify circumstances that allow exemption from the requirements for CREEPAGE DISTANCES and AIR CLEARANCES, rather than additional requirements applying to solid insulation.

Subclause 8.9.4 – Measurement of CREEPAGE DISTANCES AND AIR CLEARANCES

Narrow gaps, running in the direction of a possible creepage path and being some tenths of 1 mm wide only, should be avoided as far as possible, for dirt and moisture can deposit there.

Subclauses 8.10.1 – Fixing of components

In many cases it will be obvious that components and wiring are adequately secured (e.g. small components soldered to a printed circuit board) without the need for specific justification in the RISK MANAGEMENT FILE; but if any relevant information is included in the RISK MANAGEMENT FILE, it should be taken into account in assessing compliance with these requirements.

Subclause 8.10.2 – Fixing of wiring

Copyright International Electrotechnical Commission
Provided by IHS Markit under license with IEC
No reproduction or networking permitted without license from IHS Not for Resale, 08/26/2020 19:12:41 MDT

It is generally accepted that wiring connections are subject to the SINGLE FAULT CONDITION. That is those having only one means of being secured that would prevent a loosened/broken wire from ~~creating a HAZARD~~ resulting in a HAZARDOUS SITUATION, such as removing a PROTECTIVE EARTH CONNECTION or bridging a MEANS OF PROTECTION, are considered not in compliance.

Examples of connection that could comply with SINGLE FAULT CONDITION are:

– double crimping of both the wire and the wire insulation;

– mechanical security of the wire and soldering;

– mechanical security of the wire and wire movement restraints such as tie wraps, wire clamps, bundling straps, etc.;

– strain relief mechanisms and mechanical security.

Subclause 8.10.4 – Cord-connected HAND-HELD parts and cord-connected foot-operated control devices

HAND-HELD switches and footswitches are in practice exposed to severe conditions. This requirement ensures that even in the worst case, where the ENCLOSURE of such a switch is completely broken, only parts at voltages within the limits specified in 8.4.2 c), which are safe to touch, can become exposed.

Subclause 8.10.5 – Mechanical protection of wiring

There is no requirement for specific justification to be given in the RISK MANAGEMENT FILE, but if any relevant information is included in the RISK MANAGEMENT FILE it should be taken into account in assessing compliance with these requirements.

Subclause 8.10.7 – Insulation of internal wiring

Conductors can be routed in separated jacketed cords of adequate rating. Where conductors of different circuit categories have to be run through common cords, wiring channels, conduits or connecting devices, adequate separation is realized by sufficient rating of the conductor insulation and by arranging for sufficient AIR CLEARANCES and CREEPAGE DISTANCES, complying with the requirements of 8.9, between conductive parts in connecting devices.

Subclause 8.11.1 – Isolation from the SUPPLY MAINS

Subclause 8.11.1 a)

Skilled persons, such as SERVICE PERSONNEL, who need to gain access to internal, possibly hazardous, ME EQUIPMENT parts, need a means by which the ME EQUIPMENT can be isolated from the SUPPLY MAINS.

A mains isolating switch, where provided, could also serve as a functional off switch for routine use or for disabling hazardous output in an emergency. However it does not necessarily serve these purposes, nor does this standard specify any general requirement for an emergency off switch.

Subclause 8.11.1 c)

In the second edition of this standard, the requirement for minimum contact spacing of switches used to provide isolation from the SUPPLY MAINS was specified in IEC Publication 328. IEC 61058-1 superseded IEC 328 in 1990. The first edition of IEC 61058-1 required 3 mm contact spacing for full disconnection from the SUPPLY MAINS. No mention of overvoltage category was made. The third edition of IEC 61058-1 introduced the concept of overvoltage category according to IEC 60664-1. For a 230 V SUPPLY MAINS in overvoltage category II, Table 22 of IEC 61058-1:2000 allows a minimum contact spacing of 1,5 mm. While the requirements in this standard generally relate to overvoltage category II (see 8.9.1.11), it was thought prudent to stay with the 3 mm requirement associated with a 230 V SUPPLY MAINS IN overvoltage category III for all switches intended to provide isolation from the SUPPLY MAINS. Not only is this consistent with the requirement of the second edition of IEC 60601-1 but it is

Copyright International Electrotechnical Commission
Provided by IHS Markit under license with IEC
No reproduction or networking permitted without license from IHS
Not for Resale, 08/26/2020 19:12:41 MDT

also harmonious with the requirements of IEC 60065 and IEC 60950-1, which both require a minimum contact separation of 3 mm for switches intended to provide isolation from the SUPPLY MAINS.

Subclause 8.11.1 h)

Such a protective device whether or not it caused the operation of an over-current protection device built into the ME EQUIPMENT, would be likely also to cause a fuse or circuit breaker in the installation to operate, thus removing the supply of power to other ME EQUIPMENT, possibly including life-support ME EQUIPMENT. Such a device might also cause undesirable thermal effects inside the ME EQUIPMENT and might anyway not be a reliable method of protecting against the relevant HAZARDS.

Subclause 8.11.1 i)

Parts that cannot be disconnected from the supply might include, for example, a circuit for room lighting or a circuit for remote control of the mains switch. Such parts could become accessible when a cover is opened, for example for the purpose of maintenance.

A spatially separated arrangement is one where parts that need to be accessible for servicing are located such that the SERVICE PERSONNEL are unlikely to come in contact with parts energized at voltages exceeding those specified in this standard while performing the required service. In this case, a warning is deemed to provide adequate safety for the SERVICE PERSONNEL.

Subclause 8.11.2 – MULTIPLE SOCKET-OUTLETS

This requirement reduces the probability that other equipment is connected that might lead to excessive LEAKAGE CURRENT.

Subclause 8.11.3.4 – APPLIANCE COUPLERS

A POWER SUPPLY CORD connected to a MAINS CONNECTOR is subject to similar stresses to a non-DETACHABLE POWER SUPPLY CORD. If it is not adequately protected from excessive bending, a ~~HAZARD~~ HAZARDOUS SITUATION could result.

Subclause 8.11.3.5 – Cord anchorage

If a power cord were not adequately protected against strain and abrasion, there would be a high probability of damage to insulation providing MEANS OF PROTECTION and, with CLASS I ME EQUIPMENT, a high probability of breakage or disconnection of the PROTECTIVE EARTH CONDUCTOR.

Subclause 8.11.3.6 – Cord guards

If a power cord were not adequately protected against excessive bending, there would be a high probability of breakage of power-carrying conductors, giving a RISK of fire, and with CLASS I ME EQUIPMENT, a high probability of breakage of the PROTECTIVE EARTH CONDUCTOR.

The bending test described is identical to that specified in ~~3.29 of~~ IEC 60950-1:~~2001~~2005, subclause 3.2.8. The second edition of IEC 60601-1 included the wording “Guards which fail the above dimensional test shall have to pass the test described in IEC 60335-1, Amendment 6. 1988, subclause 25.10.” This alternative has been retained, but the reference is now to a later edition of IEC 60335-1. Also the requirement to perform one test in all cases, and then to perform the other test if the ME EQUIPMENT fails the first test, has been changed to allow either test to be performed first, because this makes no difference to whether the ME EQUIPMENT complies.

Subclause 8.11.4.1 – General requirements for MAINS TERMINAL DEVICES

Mains terminals should ensure connections of sufficiently low resistance to avoid overheating and should minimise the RISK of disconnection. Reliable connection can be made by means of screws, nuts, soldering, clamping, crimping of conductors or equally effective methods.

Copyright International Electrotechnical Commission
Provided by IHS Markit under license with IEC
No reproduction or networking permitted without license from IHS
Not for Resale, 08/26/2020 19:12:41 MDT

Use of terminals of components other than terminal blocks as terminals intended for external conductors is allowed in special cases where the terminal arrangement is adequate (accessible and clearly marked) and complying with this standard. The wiring terminals of certain types of components are often rated for field wiring purposes. These include fuse holders, EMC filters, circuit breakers, contactors, wiring strips, motor controllers and phase detectors. Each of these can be one of the first connected components thereby putting them in a good position to accept the first wiring connections.

Subclause 8.11.4.2 – Arrangement of MAINS TERMINAL DEVICES

Subclause 8.11.4.2 a)

One naturally expects to see all the terminals for connection of external cords or POWER SUPPLY CORDS grouped together. The possibility of an incorrect connection can increase if the terminals are not grouped together.

Subclause 8.11.4.4 – Connections to mains terminals

The term “special preparation of the conductor” covers soldering of the strands, use of cord lugs, attachment of eyelets, etc., by SERVICE PERSONNEL (i.e. in the field), but not the reshaping of the conductor before its introduction into the terminal or the twisting of a stranded conductor to consolidate the end. When preparation of the conductor is performed by the MANUFACTURER and the flexible cord is provided as the only acceptable replacement part, such part is considered to comply with this requirement.

Subclause 8.11.5 – Mains fuses and OVER-CURRENT RELEASES

Provision of fuses or OVER-CURRENT RELEASES in ME EQUIPMENT reduces the RISK that a fault in the ME EQUIPMENT will cause a protective device in the installation to operate, thus removing the supply of power to other ME EQUIPMENT, possibly including life-support ME EQUIPMENT.

It is obvious that fusing in a PROTECTIVE EARTH CONNECTION would be inappropriate.

Fusing of the neutral conductor of PERMANENTLY INSTALLED ME EQUIPMENT would serve no purpose and, with 3-phase equipment, might lead to overstressing of insulation in the event that such a fuse were to operate while the line connections remained intact. However an OVER-CURRENT RELEASE that interrupts all poles, including the neutral, simultaneously is acceptable.

The exemption for the case where DOUBLE INSULATION or REINFORCED INSULATION is present between all parts of opposite polarity within the MAINS PART was supported by the National Committees’ responses to an inquiry during the preparation of this edition. It could apply where provision of a fuse or OVER-CURRENT RELEASE would be inconvenient, for example in a small plug-in power supply.

Clause 9 – Protection against MECHANICAL HAZARDS of ME EQUIPMENT and ME SYSTEMS

Requirements in Clause 9 describe HAZARDS of a mechanical nature caused by ME EQUIPMENT (HARM caused by moving parts, by rough surfaces, by sharp edges and corners, by instability, by expelled parts, by vibration and noise and by breakdown of PATIENT supports and of suspension means for ME EQUIPMENT parts). Requirements describing HAZARDS caused by damage or deterioration of ME EQUIPMENT (mechanical strength) have been collected into 15.3.

ME EQUIPMENT can become unsafe because of parts damaged or deteriorated by mechanical stresses such as blows, pressures, shocks, vibration, by ingress of solid particles, dust, fluids and moisture and aggressive gases, by thermal and dynamic stresses, by corrosion, by loosening of fastenings of a moving part or a suspended mass, and by radiation.

Effects of mechanical overloads, material failure or wear can be avoided by:

– means that interrupt or render non-hazardous the operation or the energy supply (for example, fuses, pressure-relief valves) as soon as overloading occurs; or

Copyright International Electrotechnical Commission
Provided by IHS Markit under license with IEC
No reproduction or networking permitted without license from IHS Not for Resale, 08/26/2020 19:12:41 MDT

– means that guard against or catch flying or falling parts (caused by material failures, wear or overload) that could constitute a MECHANICAL HAZARD.

Protection against breakdown of PATIENT supports and suspensions can be provided by redundancy or the provision of safety catches.

ME EQUIPMENT parts that are intended to be held in the hand or positioned on a bed need to be sufficiently robust to withstand a fall. They can be subject to vibration and shocks, not only when transported but also when used in vehicles.

Subclause 9.2 – MECHANICAL HAZARDS associated with moving parts

OPERATORS, PATIENTS and other people need to be protected from MECHANICAL HAZARDS. This can be achieved in a number of ways, for example:

– by providing sufficient distance between people and MECHANICAL HAZARDS;

– by restricting access to areas that present MECHANICAL HAZARDS;

– by providing a barrier, whether mechanical or non-mechanical, between people and MECHANICAL HAZARDS;

– by reducing the RISK associated with MECHANICAL HAZARDS;

– by ensuring adequate OPERATOR control over the movements causing a MECHANICAL HAZARD; or

– by providing back-up systems so that an acceptable RESIDUAL RISK is achieved when the initial control system fails.

When reference is made, in this subclause, to the RISK to persons, rather than to the PATIENT or OPERATOR, it should be noted, that there can be other people, in addition to the PATIENT or OPERATOR in the vicinity of ME EQUIPMENT. Depending upon the ME EQUIPMENT, visitors, family members and other non-qualified personnel could be in the vicinity.

Subclause 9.2.1 – General

Requirements concerning moving parts have been based on those in other standards applying to non-medical equipment and machinery, but have been modified to take account of the necessity for ME EQUIPMENT to be in contact with or very close to the PATIENT.

Due to the diversity of situations, it is not possible in this standard to dictate where the warnings to address RESIDUAL RISK should be placed. Depending on the application, and the level of RESIDUAL RISK, it could be important to place a warning on the product. It might, however, be acceptable to place the warning only in the ACCOMPANYING DOCUMENTS.

Subclause 9.2.2.4 – GUARDS and ~~protective~~ other RISK CONTROL measures

The degree of protection required for ENCLOSURES or GUARDS protecting moving parts depends upon the general design and INTENDED USE of the ME EQUIPMENT. Factors to be taken into consideration in judging the acceptability of exposed moving parts include the degree of exposure, the shape of the moving parts, the probability of occurrence of accidental contact, the speed of movement and the probability of occurrence that fingers, arms or clothing will be drawn into moving parts (for example where gears mesh, where belts travel on to a pulley or where moving parts close in a pinching or shearing action).

These factors can be considered with respect to both NORMAL USE and the setting of any adjustments, or the replacement of any ACCESSORY or attachment, possibly including the installation, because GUARDS can be provided at installation and might not be part of a single item of STATIONARY equipment.

Features of GUARDS that can be considered include:

– removable with the use of TOOLS only;

– removable for servicing and replacement;

– strength and rigidity;

Copyright International Electrotechnical Commission
Provided by IHS Markit under license with IEC
No reproduction or networking permitted without license from IHS
Not for Resale, 08/26/2020 19:12:41 MDT

– completeness;

– creation of additional HAZARDS such as pinch points, and the necessity for additional handling because of the increased need for servicing such as for cleaning.

~~Protective measures addressed by this clause are also intended to include collision detection systems, such as those employing light barriers.~~

~~Protective measures can be used in lieu of continuous activation type control. The protective measures need to provide feedback control.~~

Subclause 9.2.2.5 – Continuous activation

Motion control systems with the OPERATOR in the feedback loop need to employ continuous activation (e.g. momentary contact, dead-man switch). Such factors as speed of motion and visible feedback to the OPERATOR also need to be adequate.

In some circumstances, OPERATOR training and other qualifications are necessary in order to have adequate OPERATOR control. In such cases, it could be desirable to utilize “lock out controls” that require intentional action to allow movement. Examples of such controls include:

– a key switch with an “enable” function;

– a finger print switch with an “enable” function;

– a password card.

In other circumstances, accidental control can be a concern. In this case, controls could employ such construction techniques as:

– control with an “enable” function, before any motions are possible;

– controls with recessed actuators; this could prevent movement if a hand or leg hits actuator unintentionally.

If the OPERATOR could have access to hazardous moving parts, controls could be designed which would prevent access to the TRAPPING ZONE by location of the OPERATOR controls. An example is a control system that needs two-hand activation.

For OPERATOR control systems without continuous activation, there can be an acceptable mitigation of RISKS, however it is necessary to evaluate the system to the other options in 9.2.2.1.

This clause deals with electronic motion control systems. For manually driven motion systems see other options in 9.2.2.1.

Subclause 9.2.2.6 – Speed of movement(s)

For some medical equipment there will be unavoidable HAZARDS due to moving parts.

Subclause 9.2.3 – Other MECHANICAL HAZARDS associated with moving parts

Subclause 9.2.2.1 deals with MECHANICAL HAZARDS caused by TRAPPING ZONES. Movement could result in other MECHANICAL HAZARDS, such as impact, puncture, etc.

Subclause 9.2.4 – Emergency stopping devices

Emergency stopping devices are designed to prevent accidental damage by preventing or stopping movements of ME EQUIPMENT parts. There could be more than one emergency stopping device on ME EQUIPMENT. ME EQUIPMENT can also include emergency off devices that are intended to disconnect all power to the installation. Emergency off devices are not subject to the requirements of this subclause unless they are also intended to provide the emergency stopping function. Emergency stopping devices could be only one part of the emergency switching function.

Copyright International Electrotechnical Commission
Provided by IHS Markit under license with IEC
No reproduction or networking permitted without license from IHS Not for Resale, 08/26/2020 19:12:41 MDT

Subclause 9.2.5 – Release of PATIENT

This requirement takes account of the possible effect of a power interruption causing unwanted movements, and the likely need in that situation, for the removal of compression forces or the removal of PATIENTS from a hazardous position.

Subclause 9.3 – MECHANICAL HAZARD associated with surfaces, corners and edges

The RISK associated with a sharp edge depends upon the position of the sharp edge and the application of the ME EQUIPMENT. For this reason, compliance with this subclause is checked by inspection. In cases of doubt, the test for sharp edges described in UL 1439 [43], can be used as guidance.

This subclause applies for surfaces accessible during NORMAL USE. Care should be given to protecting SERVICE PERSONNEL, or other internal systems where damage could result in an unacceptable RISK (e.g. fluid systems).

Subclause 9.4 – Instability HAZARDS

In NORMAL USE, many types of ME EQUIPMENT are exposed to a variety of conditions during transport (movement from room to room during NORMAL USE). While the requirements of this standard attempt to represent those that might be encountered, the RISK MANAGEMENT PROCESS should evaluate the conditions under which the ME EQUIPMENT is intended to be used and how those conditions might impact BASIC SAFETY or ESSENTIAL PERFORMANCE.

Where failure to remain stable during the performance of these tests could cause HARM to the OPERATOR, PATIENT and other persons (e.g. from crushing or falling); or result in the ME EQUIPMENT failing to meet the applicable BASIC SAFETY requirements of this standard (such as: exposing hazardous voltages, reducing CREEPAGE DISTANCES or AIR CLEARANCES or creating breaches in fire proof ENCLOSURES which are not clearly obvious) or causing a loss of ESSENTIAL PERFORMANCE, instability should be considered to result in an unacceptable RISK.

All ME EQUIPMENT is tested for overbalance with 5° tip, 10° tip, and push in 9.4.2.1, 9.4.2.2, 9.4.2.3 a) and b). In 9.4.3.1 a), b) and c) and 9.4.3.2 a) and b), only MOBILE ME EQUIPMENT is tested as these are requirements for wheels and their brakes.

Subclause 9.4.2 – Instability – overbalance

As an aid to understanding, Table A.3 and Figure A.16 illustrate the logic behind the stability test requirements.

Table A.3 – Instability test conditions

Transport warning	Test plane angle	
	10° plane	5° plane
Transport warning not provided	Must pass in all positions	Not applicable (represented by 10° test)
Transport warning provided	Must pass in transport position (only) ~~Must pass in all positions except transport~~	Must pass in all positions except transport

Copyright International Electrotechnical Commission
Provided by IHS Markit under license with IEC
No reproduction or networking permitted without license from IHS
Not for Resale, 08/26/2020 19:12:41 MDT

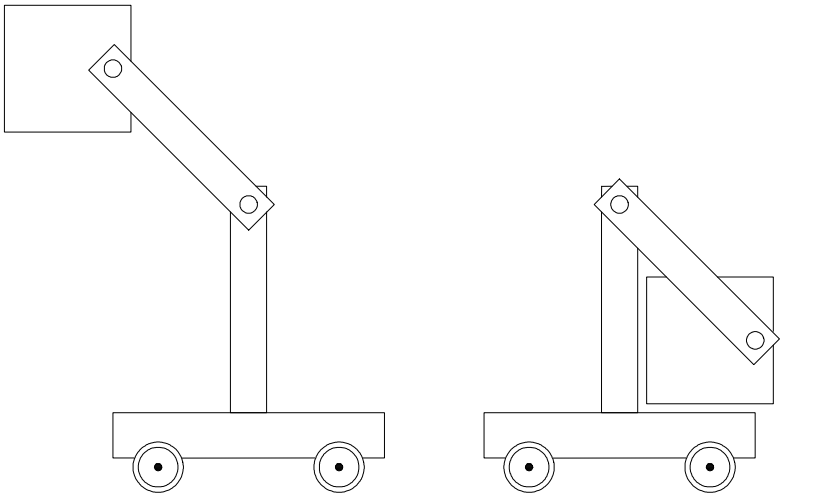

Figure A.15 – Instability test conditions

Subclause 9.4.2.3 a)

The push force of 15 % of the ME EQUIPMENT'S weight or a maximum of 150 N was selected in order to represent foreseeable misuse for typical ME EQUIPMENT, based on input from ME EQUIPMENT MANUFACTURERS. The marking option for ME EQUIPMENT that overbalances with this push force is considered something that provides medical care benefit, and with the no-pushing marking the committee presumes that the RISK would be acceptable, but the MANUFACTURER needs to make this determination based on their own analysis, which might include usability studies, including the location of the marking.

Subclause 9.4.2.4 – Castors and wheels

Compliance with this subclause is required not only to avoid obvious unacceptable RISK but also to ensure the substantially operative movement as an ESSENTIAL PERFORMANCE. ~~For ME EQUIPMENT to be considered MOBILE, it must be able to be moved from room to room.~~ MOBILE ME EQUIPMENT is defined as equipment intended to be moved from one location to another.

Subclause 9.4.2.4.3 – Movement over a threshold

The 10 mm threshold height came from the thought that cables are represented by an 8 mm to 10 mm height. The committee felt that elevator alignment is now closer to 10 mm (e.g. 4 mm) rather than 20 mm. Normally, hospitals would not have door threshold.

The manual speed of 0,8 m/s was selected from an anticipated range of 0,4 m/s to 1,5 m/s during NORMAL USE, based on input from ME EQUIPMENT MANUFACTURERS. A speed of 0,8 m/s was felt to be the most representative of NORMAL USE and normal walking speed. There's a balance between too slow a speed such that the ME EQUIPMENT won't go over the threshold and too fast a speed causing the ME EQUIPMENT to become unstable. A single speed was selected for the test as this was felt to be necessary for reproducibility among testers.

Some MOBILE ME EQUIPMENT is provided with castors for convenience but not as means to be wheeled across thresholds or similar obstacles. When the MANUFACTURER clearly indicates this use is not intended there should be no need for the threshold test. Examples of equipment that might not require a threshold test include trolleys and treatment tables that are fitted with castors to enable them to be moved easily aside for cleaning the floor or making space.

Copyright International Electrotechnical Commission
Provided by IHS Markit under license with IEC
No reproduction or networking permitted without license from IHS
Not for Resale, 08/26/2020 19:12:41 MDT

Subclause 9.4.3 – Instability from unwanted lateral movement (including sliding)

The braking functional verification tests allow the braking system to be assessed with compliance giving the presumption of acceptable RISK. The test criteria assume that generally any initial elastic movement and subsequent movement up to 50 mm are acceptable. In accordance with 4.2, if these movements for a specific piece of ME EQUIPMENT and its INTENDED USE seem inappropriate, the RISK should be lowered with additional RISK CONTROL measures.

The braking push force of 15 % or the maximum of 150 N was selected in order to represent reasonably foreseeable misuse for typical ME EQUIPMENT based on input from ME EQUIPMENT MANUFACTURERS.

The intent of braking requirements is to provide a generic test for general ME EQUIPMENT. Thus compliance criteria are black and white. It is acknowledged that some slow unwanted movement of low weight carts (low momentum), could be considered an acceptable RISK.

It is accepted that for many carts with 4 wheels, providing 2 brakes is a reasonable RISK CONTROL measure to mitigate unwanted movement due to inadequate braking. Placing 4 brakes on many carts will not result in greater usage of the brakes, as some of the wheels will typically be pivoted out of reach.

Subclause 4.5 is always applicable and allows the MANUFACTURER to use alternative RISK CONTROL measures, or variations to test method, or test compliance criteria, with justification.

Subclause 9.4.3.1 c) – Instability in transport

The hard flat surface used in this test should reflect the worst case of INTENDED USE. Slippage of wheels against the hard flat surface is a secondary concern. If slippage is detected, it should be determined whether a more appropriate surface should be chosen for the test or the wheel material is inappropriate.

Subclause 9.5 – Expelled parts HAZARD

Expelled parts are ME EQUIPMENT parts or fragments of ME EQUIPMENT parts, such as parts of a damaged vacuum display, a mechanical spring, a gas pressure cylinder, a rotating flywheel or an exploded lithium battery that could be expelled by collision, expansion etc.

The degree of protection against “expelled parts” depends upon the probability of occurrence of HARM and the SEVERITY of HARM. Protective measures can include an ENCLOSURE, barrier, or electronic means (e.g. redundant means to prevent lithium battery charging current).

Subclause 9.6.1 – General

Excessive noise can cause fatigue, interference with speech and acoustic signals, or even damage to hearing. Limits to prevent hearing damage are described in ISO standards.

In medically used rooms, much lower limits are needed for the comfort of PATIENTS and medical personnel. The actual effect of ME EQUIPMENT noise is strongly influenced by the acoustical properties of the room, the insulation between rooms and interaction of ME EQUIPMENT parts.

Excessive vibration will cause discomfort to the PATIENT, OPERATOR, and other persons. Prolonged exposure can cause vascular, neurological, or osteo-articular disorders. Excessive vibration can also cause damage to ME EQUIPMENT or a shift in calibration.

Most ME EQUIPMENT covered by this standard exposes the PATIENT and OPERATOR or other persons to negligible levels of noise and vibration. The RISK MANAGEMENT PROCESS should be able to clearly identify those cases where measurements are required.

Subclause 9.6.2 – Acoustic energy

These values are based on the potential for long term hearing impairment. The value usually used for regulatory purposes worldwide is currently 90 dBA with an offset of 5 dBA. However

Copyright International Electrotechnical Commission
Provided by IHS Markit under license with IEC
No reproduction or networking permitted without license from IHS Not for Resale, 08/26/2020 19:12:41 MDT

the latest research indicates a value of 85 dBA for 8 h over a 24 h period with an offset of 3 dBA when the time doubles or halves [34].

Although the criteria for judging whether a noise is considered impact noise is intentionally not provided, judgement should be used referring to the situation. Examples of impact noise include: the gradient noise of MRI equipment, and lithotripsy impulses.

Subclause 9.6.3 – Hand-transmitted vibration

Threshold values for vibration are much less clear than those for acoustic energy (noise). The value used here is from the *Directive of the European Parliament and of the Council on the minimum health and safety requirements regarding the exposure of workers to the risks arising from physical agents (vibration)* (sixteenth individual Directive within the meaning of Article 16(1) of Directive 89/391/EEC). It corresponds to about a 10 % incidence of blanching (indicative of neurological damage) after 8 years of regular exposure according to ISO 5349-1. It is more difficult to establish limit values for whole body vibration. Therefore this standard does not specify such limits. The end points such as back pain and other adverse health effects are not easily quantifiable, and so no agreed-upon exposure standards have been developed. Relevant information of this subject can be found in standards such as ISO 5805 [28], and ISO 8041 [29].

When a person is exposed to various levels of acceleration over a 24 h period, allowable cumulative exposure can be determined as follows. Consider first Table A.4 of allowable time of exposure over a 24 h period for each level of acceleration.

Table A.4 – Allowable time exposure for level of acceleration

Allowable time of exposure over a 24 h period h	**Acceleration** m/s^2
1	7,07
2	5,00
3	4,08
4	3,54
5	3,16
6	2,89
7	2,67
8	2,50
9	2,36
12	2,04
16	1,77
24	1,44

Some examples of allowable cumulative exposure are provided below.

If a person were exposed to a 5 m/s^2 acceleration for 1 h (which represents 1/2 daily allowable exposure time for this acceleration), followed by an exposure to a 1,44 m/s^2 acceleration for 12 h (which represents 1/2 daily allowable exposure time for this acceleration), this would be an acceptable cumulative exposure over a 24 h period.

If a person were exposed to a 4,08 m/s^2 acceleration for 1 h (which represents 1/3 the allowable daily exposure time for this acceleration), followed by exposure to a 2,36 m/s^2 acceleration for 3 h (which represents 1/3 allowable daily exposure time for this acceleration), followed by exposure to a 1,44 m/s^2 acceleration for 8 h (which represents 1/3 allowable daily exposure time for this acceleration), this would be an acceptable cumulative exposure over a 24 h period.

Copyright International Electrotechnical Commission
Provided by IHS Markit under license with IEC
No reproduction or networking permitted without license from IHS Not for Resale, 08/26/2020 19:12:41 MDT

If a person were exposed to a 5 m/s^2 acceleration for 1 h (which represents 1/2 the allowable daily exposure time for this acceleration), followed by exposure to a 4,08 m/s^2 acceleration for 1 h (which represents 1/3 allowable daily exposure time for this acceleration), followed by exposure to a 2,04 m/s^2 acceleration for 2 h (which represents 1/6 allowable daily exposure time for this acceleration), this would be an acceptable cumulative exposure over a 24 h period.

To summarize, for each acceleration determine the fractional value of allowable daily exposure by dividing the actual exposure time for a given acceleration by the allowable daily exposure time for that acceleration. The sum of the fractional values for each acceleration is not to be greater than 1.

Subclause 9.7 – Pressure vessels and parts subject to pneumatic and hydraulic pressure

The requirements of this subclause do not represent the most stringent combination of national regulations or standards.

In some countries such regulations or standards apply.

Type of systems considered include pneumatic pressure systems, hydraulic pressure systems, steam pressure systems and combinations thereof. These systems might or might not include pressure vessels.

HAZARDS

a) Mechanical rupture or breakage (HARM: lacerations, puncture wounds)

The requirements from Clause 45 of the second edition dealing with this HAZARD, have been moved to this subclause, and remain unchanged.

Requirements have been clarified to indicate that all parts have a MAXIMUM PERMISSIBLE WORKING PRESSURE not less than the pressure in NORMAL CONDITION or SINGLE FAULT CONDITION. In principal there should be a suitable safety factor between the MAXIMUM ~~PERMISSIBLE WORKING~~ EQUIPMENT PRESSURE and the bursting pressure, where the bursting pressure is the pressure at which a part suffers from permanent (plastic) deformation or leakage. Industry standards for pressure parts vary, but suitable safety factors are 3 ×, 4 ×, and sometimes 5 × (ISO, ASME, SAE). As a suitable safety factor can vary, depending on factors associated with the end-use application and RISK, it was considered inappropriate to specify a minimum safety factor in the definition of MAXIMUM ~~PERMISSIBLE WORKING~~ EQUIPMENT PRESSURE, but instead leave this to the declaration of the MANUFACTURER of such part. It is assumed that MAXIMUM ~~PERMISSIBLE WORKING~~ EQUIPMENT PRESSURE declarations will be based on recognized international or national standards, and therefore below bursting pressures at least in line with the multiplication factor shown in Figure 32, (3 ×, derated after 1 MPa to as low as 1,3 × after 30 MPa).

For pressure vessels exceeding both an energy limit (pressure × volume) and a maximum pressure limit, the requirement is to conduct a hydrostatic overpressure test based on the MAXIMUM ~~PERMISSIBLE WORKING~~ EQUIPMENT PRESSURE declaration and the multiplication factor shown in Figure 32, (3 ×, derated after 1 MPa to as low as 1,3 × after 30 MPa).

b) Mechanical loss of support (HARM: crush, puncture wounds)

Requirements have been clarified to specify that components in a pressure system, such as those in a hydraulic lift system whose integrity is relied on to reduce the RISK from loss of support need to comply with the NORMAL CONDITION TENSILE SAFETY FACTORS specified in 9.8. The TENSILE SAFETY FACTOR is typically 4 × for parts not impaired by wear, and 8 × for parts impaired by wear (Case B). Thus parts subject to pressure whose failure could result in mechanical rupture and loss in support need to have a MAXIMUM ~~PERMISSIBLE WORKING~~ EQUIPMENT PRESSURE based on the higher of the SINGLE FAULT CONDITION pressure and the MANUFACTURER's declaration for each system component as specified in 9.7, or the NORMAL CONDITION pressure and the TENSILE SAFETY FACTOR as specified in 9.8.

Copyright International Electrotechnical Commission
Provided by IHS Markit under license with IEC
No reproduction or networking permitted without license from IHS
Not for Resale, 08/26/2020 19:12:41 MDT

c) Leakage of toxic gas or liquid (HARM: chemical or biological cell damage)

The requirements from Clause 45 of the second edition dealing with this HAZARD have been moved to this clause, and remain unchanged.

Requirements have been clarified to indicate that all pressure system components need to have a MAXIMUM ~~PERMISSIBLE WORKING~~ EQUIPMENT PRESSURE based on the SINGLE FAULT CONDITION pressure and the MANUFACTURER's declaration for each system component.

d) Leakage of flammable gas or liquid (HARM: fire causing burns or property damage)

The requirements from Clause 45 of the second edition dealing with this HAZARD, have been moved to this clause, and remain unchanged.

Requirements have been clarified to indicate that all pressure system components need to have a MAXIMUM ~~PERMISSIBLE WORKING~~ EQUIPMENT PRESSURE based on the SINGLE FAULT CONDITION pressure and MANUFACTURER'S declaration each system component.

Subclause 9.7.5 – Pressure vessels

The Oxford dictionary defines a pressure vessel as "a container designed to hold material at high pressures." This is the usage intended by this standard.

It is assumed that a hydraulic test is not necessary if the pressure is less than or equal to 50 kPa or the product of the pressure and volume is less than or equal to 200 kPa · l.

The safety factors implied by Figure 32 are higher than those generally applied in testing pressure vessels. However, whereas hydraulic testing is normally used to verify that a pressure vessel is free from production faults or serious deterioration, the adequacy of the design being determined in other ways, the present hydraulic test is intended to verify the adequacy of a design where this cannot be established in other ways.

The deletion of national references in the amended text avoids subordinating the requirements of the standard to those of local regulations. The ME EQUIPMENT will sometimes have to satisfy both, or the more demanding, assuming that there are no local regulations that conflict with this standard.

A hydraulic test is specified even for pneumatic vessels, as this is safer for the tester. In achieving the test pressure with a gas, the gas will compress, resulting in more stored energy in the test vessel than would a hydraulic test method. Both methods result in the same test pressure, which is the objective of the test.

Subclause 9.8 – MECHANICAL HAZARDS associated with support systems

The term "support" is taken to include "suspension" and loads can include PATIENTS, OPERATORS and other masses.

Support systems can broadly be categorized as follows.

– A suspension system is one that contains flexing or rigid elements that are designed to suspend masses, including PATIENTS and OPERATORS during NORMAL USE.

– Flexing elements include ropes, cables, chains, belts, bands and springs. Additionally a jack screw nut is considered impaired by wear to the extent needing a higher TENSILE SAFETY FACTOR.

– An actuating system is one that contains elements such as electric, pneumatic or hydraulic actuators, motors, gearboxes, shafts, bearings, pulleys, sheaves, band wheels and guides.

– A support structure is generally a rigid device that can be static or moving and which supports ME EQUIPMENT, external loads and, where necessary, PATIENTS and OPERATORS.

Subclause 9.8.2 – TENSILE SAFETY FACTOR

--`,,`,,`-`-`,,`,,`,`,,`---
Copyright International Electrotechnical Commission
Provided by IHS Markit under license with IEC
No reproduction or networking permitted without license from IHS
Not for Resale, 08/26/2020 19:12:41 MDT

TENSILE SAFETY FACTORS are applied to provide a margin of safety to the design after all reasonable allowances for operating conditions, material and manufacturing variables, etc., have been made.

In determining whether case A or B is to be used from Table 21, certainty of material strength is required in order to apply case A values. Additionally there needs to be confidence in the determination of TOTAL LOAD in order to apply case A values. TOTAL LOAD is constituted from "static force" and "dynamic force" components. The static force is normally clear. But the dynamic force/loading is sometimes uncertain. When the dynamic forces are known as well as static forces, the TENSILE SAFETY FACTOR is determined with case A. When the dynamic forces are not clear, and the static forces are known, the TENSILE SAFETY FACTOR is determined with case B.

External forces for PATIENT supports can include those generated by application of CPR, etc.

Elongation at break of 5 % is based on historical experience with metallic materials, in particular steel and cast iron. Materials with elongation at break less than 5 % are considered brittle and their failure is likely catastrophic, and therefore a higher safety factor is considered appropriate.

For non-metallic materials:

– Where no other experience exists, and where failure mode is likely catastrophic, this elongation factor is considered appropriate, and therefore a higher TENSILE SAFETY FACTOR is considered appropriate.
– Where experience and testing show otherwise, an elongation at break of less than 5 % can be appropriate before a higher TENSILE SAFETY FACTOR is justified.

For example, PATIENT tables of X-ray/CT/MR systems are often designed with plastic materials laminated or reinforced by carbon fibres/cloths or glass fibres/cloths, since these PATIENT tables must be optimised for low absorption of X-ray radiation (aluminium equivalence), MR compatibility (low proton signal), as well as structural stability. Although these plastic materials reinforced by carbon fibres/cloths can have elongation at break of less than 5 %, many years knowledge, acquired expertise, and post-market surveillance can provide sufficient evidence that suitable structural stability of PATIENT tables is achieved by applying a TENSILE SAFETY FACTOR from Table 21, Situation 1 (rather than Situation 2).

At end of life or periodic maintenance cycle, ME EQUIPMENT needs to maintain structural integrity. Line 1 of Table 21 is normally appropriate for end of life or the end of the periodic maintenance cycle since wear is no longer considered.

Suspension and actuating systems have TENSILE SAFETY FACTORS that are necessarily high to reduce the effects of deterioration through wear and fatigue.

Particular attention should be given to the fixing of structures to floors, ceilings, etc. that are subject to variable TENSILE SAFETY FACTORS.

A hidden defect is one that is not revealed during manufacture, service or normal operation of the ME EQUIPMENT but that could cause failure of a part that could result in a HAZARD. Examples are high internal stresses in heat-treated parts such as springs, broken strands of wire inside cables and porosity inside castings.

Figure A.17 contains an example of determining the appropriate TENSILE SAFETY FACTOR using Table 21. Figure A.18 contains an example of determining design and test loads. These examples are not intended to cover all possible cases. For a particular design, these TENSILE SAFETY FACTORS and design/test loads can vary according to the materials used, their wear characteristics, loading conditions, etc.

This subclause focuses on safety factors as the suggested approach to have confidence that the equipment will maintain structural integrity during its EXPECTED SERVICE LIFE. In some cases the specified safety factors are more than needed, and in some cases even larger factors could be considered appropriate. The compliance criteria can be satisfied by RISK MANAGEMENT rather than by the use of the safety factor route. For new materials or for

Copyright International Electrotechnical Commission
Provided by IHS Markit under license with IEC
No reproduction or networking permitted without license from IHS Not for Resale, 08/26/2020 19:12:41 MDT

structures with sophisticated monitoring of stresses, the safety factors might not be necessary.

If it is deemed that the failure mode of the part does not result in an unacceptable RISK, the TENSILE SAFETY FACTORS specified in Table 21 do not apply. For example, for proprietary components such as bearings it is acceptable to rely on the component MANUFACTURER'S data for load and life expectancy without applying a TENSILE SAFETY FACTOR.

A jack screw nut considered impaired by wear is usually intentionally constructed from a material softer than the jack screw. The intent is to have generic requirement provided for general ME EQUIPMENT.

Newer jack screw designs can have less friction than traditional designs, and, for example, can include multiple ball bearings. Such designs can be considered as less “impaired by wear” as dictated by vendor declarations and a MANUFACTURER’S RISK ASSESSMENT.

Subclause 4.5 is always applicable and allows the MANUFACTURER to use alternative RISK CONTROL measures, or variations to a test method or test compliance criteria, with justification.

Subclause 9.8.3 – Strength of PATIENT or OPERATOR support or suspension systems

This subclause deals with forces applied on support or suspension parts of ME EQUIPMENT, intended to support or suspend the mass of a human body or part of the mass of a human body, and to ACCESSORIES used on such support or suspension parts. For adult PATIENTS or OPERATORS the 135 kg mass represent the 99 percentile of the population. For specific populations, higher mass or lower mass can be used (e.g. heavy person or paediatric application).

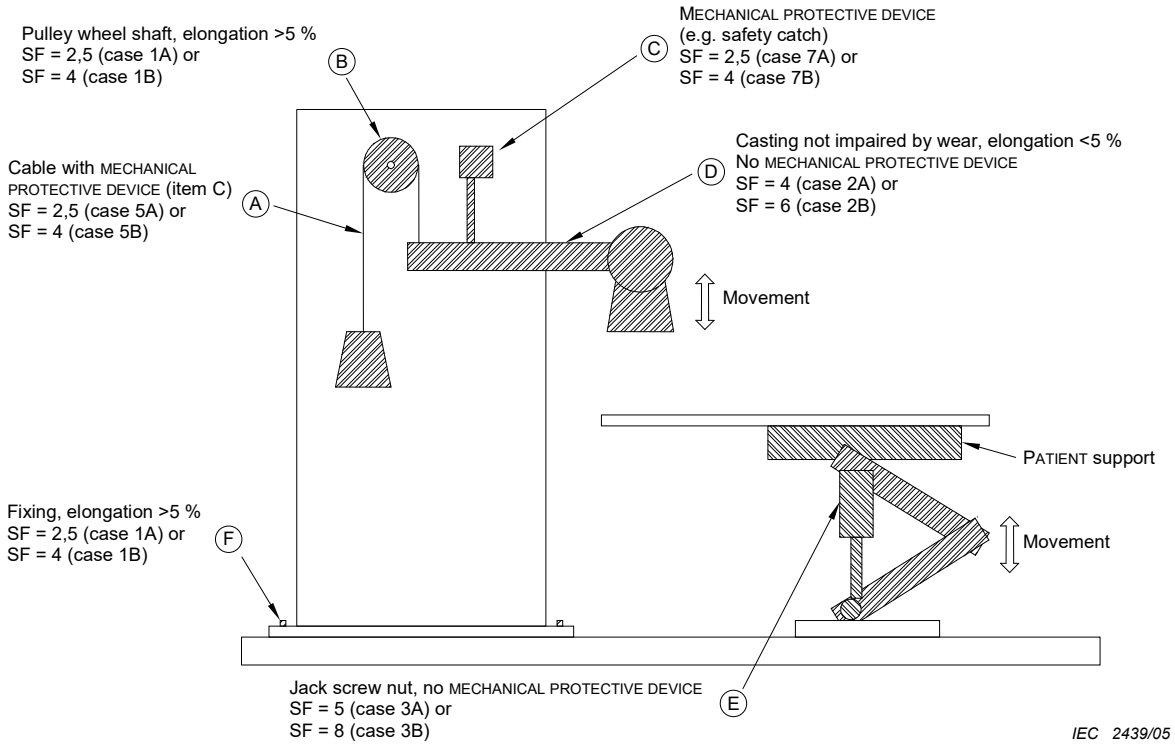

Figure A.16 – Example of determining TENSILE SAFETY FACTOR using Table 21

Copyright International Electrotechnical Commission
Provided by IHS Markit under license with IEC
No reproduction or networking permitted without license from IHS
Not for Resale, 08/26/2020 19:12:41 MDT

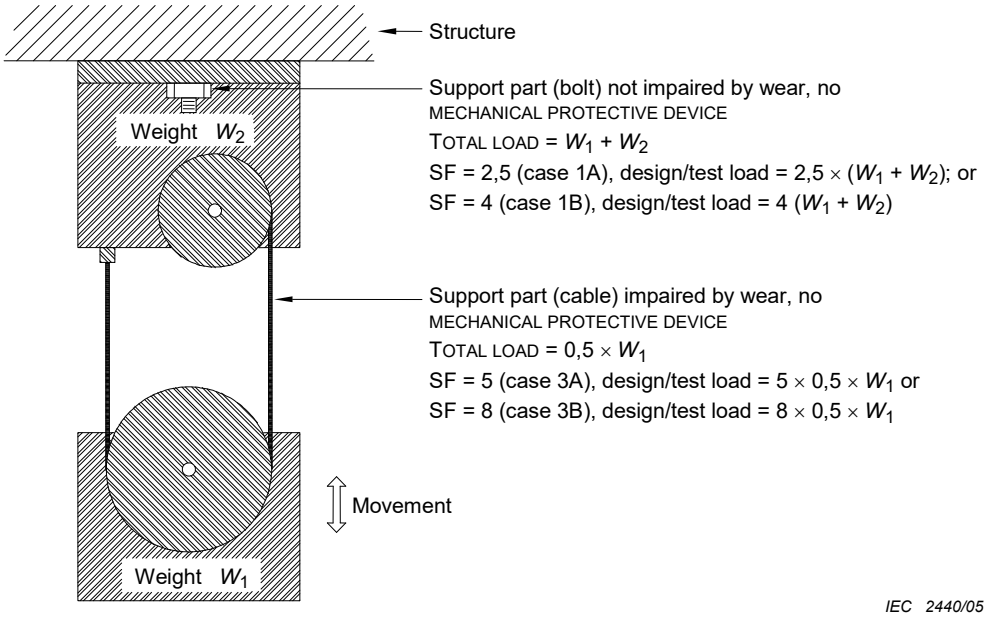

NOTE TOTAL LOAD is shown based on only static forces to obtain actual total loads, dynamic forces also need to be included.

Figure A.17 – Example of determining design and test loads

Subclause 9.8.3.2 – Static forces due to loading from persons

Figure A.19 contains an example of human body mass distribution for PATIENT support surfaces.

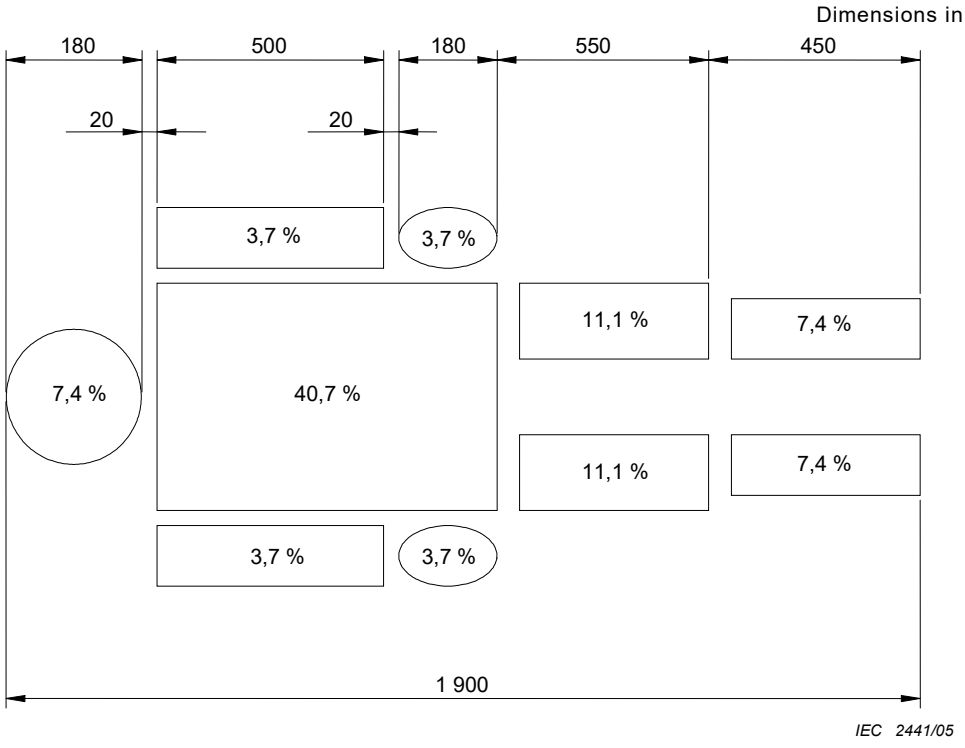

Figure A.18 – Example of human body mass distribution

The distribution mass of a body diagram is an average distribution based on anthropometrical data. Due to the variety of population or specific categories of age, it can vary. For sedentary

Copyright International Electrotechnical Commission
Provided by IHS Markit under license with IEC
No reproduction or networking permitted without license from IHS
Not for Resale, 08/26/2020 19:12:41 MDT

people not having a physical activity the mass of the upper part of the body can represent a more important percentage.

The variety of ME EQUIPMENT does not allow more precision to be given in this general standard. It is up to the particular standard to define more adequately the distribution area or the worst-case position, rather than dynamic tests.

A foot rest is tested for twice its normal load, rather than a load based on a TENSILE SAFETY FACTOR value from Table 21, as it is intended to support a PATIENT'S weight for only a short duration of time.

The test with a mass of 80 kg placed 60 mm from the outer edge is intended to simulate the centre of gravity of a PATIENT sitting or leaning on the edge of a support surface.

During the static loading tests, it's intended that any temporary elastic deflection (during the test), and permanent plastic deflection (after the test) are checked for any adverse effect on BASIC SAFETY or ESSENTIAL PERFORMANCE.

For the step loading test, the committee felt that a 5° deflection would provide a measurable quantity that would represent a reasonable limit for acceptance. The 2X loading factor is a precedent from the 2nd edition of IEC 60601-1, and seems to recognize the temporary loading that steps represent during their life.

For the sitting surface loading test, no specific linear or arc limits are specified. The intent is to evaluate any temporary elastic or permanent plastic deflections for any adverse effect on BASIC SAFETY or ESSENTIAL PERFORMANCE. The 60 % sitting loading factor was considered representative of actual sitting load, when legs are dangling off the edge of the sitting surface. Loss of function is not considered unacceptable unless associated with ESSENTIAL PERFORMANCE. The intent is damage should not result in injury to persons, or loss of RISK CONTROL measures. Surfaces that are intended to support sitting and at other times full patient loads are also evaluated for compliance with the appropriate loading factor(s) in 9.8.2.

Subclause 9.8.3.3 – Dynamic forces due to loading from persons

A general dynamic test is defined which represents common situations represented by a person sitting down or standing up.

The requirement of this subclause is intended to apply to the chairs for dental surgical procedures, X-ray tables, and many other similar types of ME EQUIPMENT. The ME EQUIPMENT should be in all operating modes and positions where dynamic loads from PATIENTS can be reasonably expected. For example, when a PATIENT table is positioned in an area of a CAT or magnet structure, the dynamic test is not applicable as the dynamic loading caused by a PATIENT is negligible.

ME EQUIPMENT should be designed to bear a repeating force, by considering appropriate TENSILE SAFETY FACTORS and the results of fatigue calculations. TENSILE SAFETY FACTORS exist to show the reliability of the equipment without real testing.

The bottom portion of the human body test mass apparatus shown in Figure 33 is foam, and should simulate contact by the relevant PATIENT part.

Subclause 9.8.4 – Systems with MECHANICAL PROTECTIVE DEVICES

The intent of a MECHANICAL PROTECTIVE DEVICE is to act to prevent HARM in the event of the failure of the primary support means that is subject to wear. The failure of the primary support means subject to wear is considered a SINGLE FAULT CONDITION if it has a TENSILE SAFETY FACTOR in accordance with Table 21, rows 5 and 6. To protect against HARM in this SINGLE FAULT CONDITION, the MECHANICAL PROTECTIVE DEVICE acts as a backup, and needs to have the TENSILE SAFETY FACTOR indicated in Table 21, Row 7. It is considered good engineering practice to construct a MECHANICAL PROTECTIVE DEVICE from non-brittle materials, and therefore Row 7 does not include an elongation column.

Copyright International Electrotechnical Commission
Provided by IHS Markit under license with IEC
No reproduction or networking permitted without license from IHS Not for Resale, 08/26/2020 19:12:41 MDT

To test a MECHANICAL PROTECTIVE DEVICE, the primary support means subject to wear needs to be defeated. For example if the primary support system is a cable, the cable would be cut.

Clause 10 – Protection against unwanted and excessive radiation HAZARDS

Radiation from ME EQUIPMENT can occur in all forms known in physics. BASIC SAFETY requirements are concerned with unwanted radiation. Protective measures are necessary for ME EQUIPMENT and for the environment and methods for determining levels of radiation need to be standardized.

This clause is intended to deal with stray radiation (such as scattered radiation from radiological equipment) and incidental radiation (such as X-ray emitted by CRTs). A requirement for unintended or excessive output of radiation that ME EQUIPMENT is intended to deliver to the PATIENT is covered in 12.4.5.

For ionizing radiation IEC requirements generally comply with the International Commission for Radiation Protection (ICRP) Recommendations. Their purpose is to provide data that are immediately usable by designer and RESPONSIBLE ORGANIZATION.

Their evaluation is possible only by adequate study of operating methods and duration of operation of ME EQUIPMENT and positioning of OPERATOR and assistants, because application of worst case conditions would give rise to situations that might hamper proper diagnosis or treatment.

Recent ICRP publications also instruct the OPERATOR in methods for the restriction of intentional irradiation.

Subclause 10.1.1 – ME EQUIPMENT not intended to produce diagnostic or therapeutic X-radiation

Spurious X-radiation from components such as Video Display Units (VDU) is a potential source of concern for ME EQUIPMENT, many of which contain VDUs. Annex H of IEC 60950-1:~~2001~~2005 contains a well-accepted PROCEDURE for measuring such spurious emissions for information technology equipment. The limits in that annex are based on ICRP 60 [39]. ~~The requirements from Annex H of IEC 60950-1:2001 were incorporated into the body of this standard because this was the only normative reference that required the use of IEC 60950-1.~~

IEC 62368-1:2018 is replacing IEC 60950-1 and was incorporated into this standard as part of Amendment 2. Based on a review of the test procedures and requirements according to IEC 60950-1:2005 and IEC 62368-1:2018, it was determined that there are differences in the measurement procedures and acceptance criteria. IEC 62368-1:2018 adds an additional requirement for measurements under single fault conditions. Additionally, IEC 62368-1:2018 adds a requirement that images generated during the test be intelligible (which is defined). IEC 62368-1:2018 does not include the 50 mm measuring surface of the OPERATOR access area which is specified in IEC 60950-1:2005. The limits are the same between IEC 60950-1:2005 and IEC 62368-1:2018.

Other normative references to IEC 60950-1 are alternative means of addressing items such as CREEPAGE DISTANCE and AIR CLEARANCE. A user of this standard does not have to reference 60950-1 unless they wish to use the insulation coordination methods contain in that document.

Subclause 10.3 – Microwave radiation

This subclause specifies a microwave power density limit to mitigate thermal harm to whole body tissue. The intention is that compliance might be appropriately determined with engineering judgement, in lieu of testing, when it's obvious that emissions are nowhere near the 10 W/m^2 power density limit. Knowledge about equipment transmission specifications and engineering judgement might be used to determine compliance. The safety threshold of 10 W/m^2 greatly exceeds that allowed for wireless communication uses, where SAR (W/kg)

Copyright International Electrotechnical Commission
Provided by IHS Markit under license with IEC
No reproduction or networking permitted without license from IHS
Not for Resale, 08/26/2020 19:12:41 MDT

limits are applicable. For example, equipment with microprocessor clock oscillators or intentional transmission radios such as Wi-Fi™, Bluetooth®, GPS, or cellular would comply with this threshold since these meet more stringent limits for their applicable bandwidth. When this confidence does not exist, appropriate power density measurements should be conducted.

Subclause 10.4 – Lasers ~~and light emitting diodes (LEDs)~~

~~A dated reference to IEC 60825-1 was used because at the time of publication of this standard IEC/TC 76 was in the early stages of developing a third edition of IEC 60825-1 and was considering removing the requirements for LEDs from IEC 60825-1.~~

IEC 60825-1:2014 is applicable to safety of laser products emitting laser radiation in the wavelength range 180 nm to 1 mm. This includes laser diodes. A laser product can consist of a single laser with or without a separate power supply or it can incorporate one or more lasers in a complex optical, electrical, or mechanical system.

Any laser product is exempt from all further requirements of IEC 60825-1 if classification by the laser manufacturer demonstrates that the emission level does not exceed the AEL (Accessible Emission Limit) of Class 1 under all conditions of operation, maintenance, service and failure.

In other editions of IEC 60825-1, LEDs were included in the scope of that standard, and they can be still included in other parts of the IEC 60825 series. However, with the development of lamp safety standards, optical radiation safety of LEDs in general can be more appropriately addressed by lamp safety standards. The removal of LEDs from the scope of IEC 60825-1 does not preclude other standards from including LEDs whenever they refer to lasers. IEC 62471 [67] can be applied to determine the risk group class of an LED or product incorporating one or more LEDs.

Subclauses 10.5, 10.6 and 10.7 – Other visible electromagnetic, infrared and ultraviolet radiation

IEC 62471 [67] gives guidance for evaluating the photobiological safety of lamps and lamp systems including luminaires. Specifically, it specifies the exposure limits, reference measurement technique and classification scheme for the evaluation and control of photobiological hazards from all electrically powered incoherent broadband sources of optical radiation, including LEDs but excluding lasers, in the wavelength range from 200 nm through 3 000 nm. IEC 62471 was originally prepared as Standard CIE S 009:2002 by the International Commission on Illumination.

Where appropriate, IEC 60601-2-57 [75] is used for ME EQUIPMENT incorporating non-laser light sources intended to create non-visual photobiological effects.

Subclause 11.1 – Excessive temperatures in ME EQUIPMENT

Temperature limits are required to prevent ~~HAZARDS~~ HAZARDOUS SITUATIONS for almost all types of ME EQUIPMENT with the purpose of preventing rapid ageing of insulation and discomfort where ME EQUIPMENT is touched or manipulated, or injuries where PATIENTS could contact ME EQUIPMENT parts.

ME EQUIPMENT parts might be inserted into body cavities, usually temporarily but sometimes permanently.

For PATIENT contact, special temperature limits have been set.

Subclause 11.1.1 – Maximum temperature during NORMAL USE

Table 22 addresses limits for parts that could affect compliance of the ME EQUIPMENT with this standard in general (e.g. electrical BASIC SAFETY).

Copyright International Electrotechnical Commission
Provided by IHS Markit under license with IEC
No reproduction or networking permitted without license from IHS Not for Resale, 08/26/2020 19:12:41 MDT

It is not intended that the ME EQUIPMENT parts be tested in every possible configuration of NORMAL USE as long as the MANUFACTURER can determine the worst-case conditions. The "worst case" will almost always include the highest allowable ambient temperature and operation of the ME EQUIPMENT at the maximum DUTY CYCLE, but other specific aspects of the configuration of the ME EQUIPMENT (such as attachment of ACCESSORIES) should be determined by the MANUFACTURER based on a thorough understanding of the ME EQUIPMENT'S design.

Subclause 11.1.2 – Temperature of APPLIED PARTS

Table 23 and Table 24 addresses HAZARDS that could arise from human contact with higher temperatures. Human contact temperatures were based on clinical expertise, clinical literature [52] and experimentation. In addition, the values agree with those of the European Norm EN 563 [38].

Although the maximum surface temperature for an APPLIED PART was raised from 41 °C to 43 °C in response to the clinical input mentioned above, input from some clinicians pointed out that infants as well as some other (thermally) high risk groups could be more prone to HARM from heated surfaces at 43 °C.

Ideally, particular standards for ME EQUIPMENT used for these PATIENT groups would have requirements for (where necessary) lower contact temperatures. In order to address those cases where such particular standards do not exist, the working group felt that notification of the RESPONSIBLE ORGANIZATION when temperatures exceed the second edition limit of 41 °C was adequate. However, the new 43 °C limit is to be considered an absolute maximum.

When measuring APPLIED PART temperatures, the method used should simulate the worst-case configuration when possible using real or simulated human skin. Determination of the worst-case configuration should consider aspects such as the likely body temperature and whether or not the part of the body or APPLIED PART itself is covered (such as with a blanket). Simulated human skin for these purposes could include materials such as silicon rubber.

Subclause 11.1.2.2 – APPLIED PARTS not intended to supply heat to a PATIENT

Table A.5 is provided as guidance for ME EQUIPMENT that creates low temperatures (cools) for therapeutic purposes or as part of its operation. Normative requirements have not been included in this standard because such ME EQUIPMENT is uncommon.

Table A.5 – Guidance on surface temperatures for ME EQUIPMENT that creates low temperatures (cools) for therapeutic purposes or as part of its operation

ME EQUIPMENT and its parts		Minimum Temperature [a] °C	
		Aluminium	Steel
External surface of ME EQUIPMENT and its parts that are likely to be touched for a time "*t*".[b]	*t* < 1 s	–20	–20
	1 s ≤ *t* < 10 s	–10	–15
	10 s ≤ *t* < 60 s	–2	–7

[a] The allowable minimum temperature limit values for external surfaces that are likely to be touched by the PATIENT, OPERATOR and other persons are based on freezing threshold values of a finger touching different materials (frostbite threshold).

[b] The probability of occurrence of contact and the duration of contact should be determined and documented in the RISK MANAGEMENT FILE.

Subclause 11.1.3 – Measurements

The proper use of thermocouples is recognized in other standards as a valid test technique. The temperature limits are lowered to compensate for errors that could occur in the construction and placing of the thermocouple.

--`,,```,,,,````-`-`,,`,,`,`,,`---

Copyright International Electrotechnical Commission
Provided by IHS Markit under license with IEC
No reproduction or networking permitted without license from IHS Not for Resale, 08/26/2020 19:12:41 MDT

During development of the requirements of 11.1.3, the working group discussed whether it would be appropriate to reduce the maximum allowable temperature for surfaces and APPLIED PARTS at higher altitudes. In response to this question, a thorough evaluation was performed by Dr. Joachim Kohl, an expert member of the group. The following summarizes the results of that evaluation (see Figure A.22).

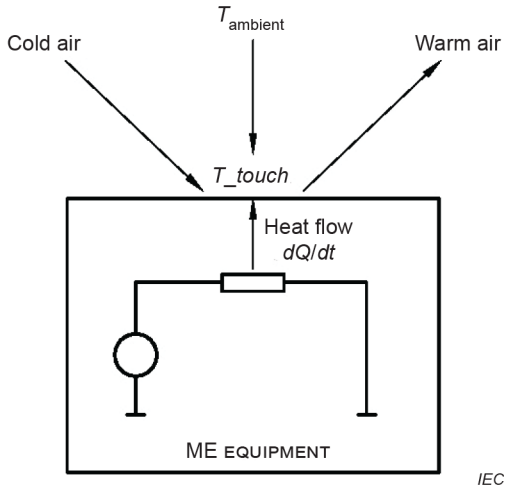

Figure A.22 – Maximum allowable temperature for surfaces and APPLIED PARTS at higher altitudes

The following variables and symbols are used in the evaluation:

T_touch	touch temperature at the surface of the ME EQUIPMENT
DeltaT	temperature difference of the touched area to ambient
R_thermal	thermal resistance of the ME EQUIPMENT area under test to ambient
Q	heat
dQ/dt	heat flow
Pambient	ambient air pressure
alpha	heat transfer coefficient = *dQ/dt* / (*DeltaT* * *area*)
L	characteristic length of the heat transfer area
area	cooling area of the device
lambda	heat conductance
eta	dynamic viscosity
rho	density of gas
Nu	Nusselt number
Re	Reynold number
Gr	Grashof number
sqrt	square root
~	proportional

Evaluation of the effects of altitude on thermal transfer:

The standard heat transfer equation is:

$$DeltaT = R\_thermal * dQ/dt$$

For *R_thermal*, one can estimate:

Copyright International Electrotechnical Commission
Provided by IHS Markit under license with IEC
No reproduction or networking permitted without license from IHS
Not for Resale, 08/26/2020 19:12:41 MDT

$$R\_thermal \sim 1 / Pambient^{m}$$

with the exponent m = 0,6 … 0,8, we will assume 1.

Equations about the proportionality to 1 / *Pambient*^{m}:

Therefore,

$$R\_thermal \sim 1 / alpha$$

where the proportionality factor contains geometric data.

Definition of *Nu*:

$$Nu = alpha * L / lambda$$

Results of theoretical investigations:

$$Nu \sim Re^{m}$$

The proportionality factor depends on geometry and on the kind of gas and the way of air flow, but not on temperature, pressure, density.

The exponent m is determined by geometry and the way of air flow. For free convection due to a temperature gradient *Re* is given by:

$$Re = sqrt\ (\ 0{,}4 * Gr)$$

The definition of *Gr* leads to:

$$Gr \sim (rho\ / eta)^{2}$$

so that:

$$Re \sim rho / eta.$$

This last relationship also holds true for forced convection.

From the general gas equation we can see:

$$rho \sim Pambient$$

Lambda and *eta* do not depend on pressure (according to standard physics textbooks). Putting it all together leads to the above stated proportionality between *R_thermal* and *Pambient*.

Subclause 11.2 – Fire prevention

Within most environments where ME EQUIPMENT is used, other sources of “fuel” for combustion are typically far more significant than that provided by the ME EQUIPMENT itself. The requirements addressing fire in this standard focus on preventing the ME EQUIPMENT from being the source of combustion. For this reason, these requirements focus on ME EQUIPMENT that contains or is used in the presence of OXYGEN RICH ENVIRONMENTS. These requirements attempt to ensure that any potential source of ignition remains isolated from the OXYGEN RICH ENVIRONMENTS under NORMAL USE and SINGLE FAULT CONDITIONS.

Where ME EQUIPMENT is not used in such environments, assuring that the limits for operating temperatures and requirements for overload protection are met should be considered adequate.

--`,,`,,`-`-`,,`,,`,`,,`---

Copyright International Electrotechnical Commission
Provided by IHS Markit under license with IEC
No reproduction or networking permitted without license from IHS Not for Resale, 08/26/2020 19:12:41 MDT

For ME EQUIPMENT that could provide a significant source of fuel (in comparison to the normal operating environments) additional requirements should be provided by particular standards. Where no particular standard exists, such issues should be specifically addressed in applying the RISK MANAGEMENT PROCESS as required in 4.2.

Subclause 11.2.1 –Strength and rigidity required to prevent fire in ME EQUIPMENT.

At least all electrical parts that could result in a ~~HAZARD~~ HAZARDOUS SITUATION, with the exception of POWER SUPPLY CORDS and other necessary interconnecting cords, should be enclosed in material that will not support combustion.

This does not preclude the use of an outer cover of other material covering an inner cover complying with the above recommendation.

For guidance on assessing fire HAZARDS, see IEC 60695-1-10 [17].

Subclause 11.2.2 – ME EQUIPMENT and ME SYSTEMS used in conjunction with OXYGEN RICH ENVIRONMENTS

While not a flammable mixture, the presence of an OXYGEN RICH ENVIRONMENT increases the flammability of many substances. Reports of fires in OXYGEN RICH ENVIRONMENTS in ME EQUIPMENT are unusual. However, when such fires do occur in the hospital environment they can have tragic consequences.

ME EQUIPMENT intended to operate in conjunction with an OXYGEN RICH ENVIRONMENT should be designed to minimize the probability or occurrence of ignition of flammable materials.

Where appropriate, particular standards should specify the corresponding requirements.

Subclause 11.2.2.1 a)

Cotton is regarded to be the material with the lowest ignition temperature and energy in comparison with electronic circuits and it is assumed that it can be found in the interior of a device as dust.

The maximum surface temperature limit is based on the minimum hotplate ignition temperature for fire retardant cotton in 100 % oxygen that is given in NFPA 53 [41] as 310 °C. The assumption was therefore made that 300 °C was an acceptable temperature limit in ME EQUIPMENT with OXYGEN RICH ENVIRONMENTS.

The worst case conditions described in the text make it possible to provide simple numbers as limitations.

The values for sparking are taken from Kohl, H.-J. *et al*., ASTM STP 1395 [37].

This subclause allows the use of electronic circuits in OXYGEN RICH ENVIRONMENTs only when their power supply is limited. The resistive limitation of the power input is necessary for the SINGLE FAULT CONDITION of an open solder joint that might spark. The same reason applies to the limitation of energy in capacitances and inductances. In most cases the limitation in item 4) to 300 °C is more restrictive than these. For most small components like decoupling capacitors, or where the failure of a component causes the maximum possible power to be drawn from the source, it is necessary to limit the power to about 1 W. The PROCEDURE to find the necessary value to limit the power so that the 300 °C limit is not exceeded can be as follows:

– look for the smallest component that can match to the power source in a SINGLE FAULT CONDITION;
– estimate its thermal resistance;
– calculate the power limitation = 200 °C / thermal resistance.

--`,```````,,`,``,,,,,,,,,```-`-`,,`,,`,`,,`---
Copyright International Electrotechnical Commission
Provided by IHS Markit under license with IEC
No reproduction or networking permitted without license from IHS
Not for Resale, 08/26/2020 19:12:41 MDT

Subclause 11.2.2.1 b) 2)

This item addresses the condition of an undetected oxygen leak. In accordance with the definition of SINGLE FAULT SAFE, such a leak (because it is undetected) is considered a NORMAL CONDITION (see 4.7). Similarly, only the failure of the ventilation, which is undetected, needs to be considered a NORMAL CONDITION. Where a ventilation system's design makes it unlikely that it will be completely blocked in NORMAL USE, such blockages should not be considered. The only way to find the maximum leak rate that needs to be considered is to find the minimum leak rate that can safely be detected by the RESPONSIBLE ORGANIZATION.

Subclause 11.2.2.1 b) 3)

The cause of the HAZARDOUS SITUATION is: a leak occurs and is not detected; some time later an electrical failure occurs that starts an ignition. The time interval t_c for checking the seals can be calculated as follows:

– estimate the probability per time p_e of an electrical failure that exceeds the values given in 11.2.2.1 a);

– estimate the probability per time of the oxygen leak p_o ;

– determine the accepted probability of dangerous failures per time r ;

– calculate: $t_c = r / (0{,}5 \times p_e \times p_o)$.

Subclause 11.2.2.2 – External exhaust outlets for OXYGEN RICH ENVIRONMENT

Serious oxygen fires have been reported where the ignition source has been a faulty electrical connector close to an oxygen outlet.

Subclause 11.3 – Constructional requirement for fire ENCLOSURES of ME EQUIPMENT

The requirements for fire ENCLOSURES ~~from IEC 61010-1 [22]~~ have been included primarily as an alternate to the tests related to SINGLE FAULT CONDITIONS (associated with combustion and its consequences listed in Clause 13). By requiring flame resistance for the ENCLOSURE and materials contained within it, the probability of occurrence of fire escaping such ENCLOSURES is considered minimal. Where the fire ENCLOSURE constitutes only a part of the ME EQUIPMENT, careful analysis should be performed to assure that a reliable barrier to the propagation of fire exists.

IEC 61010-1:2010 [22], subclause 9.3.2, requires wire insulation to retard flame propagation when used inside a fire ENCLOSURE. Wire with a flammability rating of UL 2556 [72] VW-1 or equivalent is considered to meet this requirement. In case of doubt, wires are tested according to the applicable requirements of IEC 60332-1-2 [55] or IEC 60332-2-2 [56]. These wire flame resistance requirements are considered acceptable for ME EQUIPMENT and ME SYSTEMS.

Subclause 11.4 – ME EQUIPMENT and ME SYSTEMS intended for use with flammable anaesthetics

While the use of flammable anaesthetics is uncommon, it was determined during the writing of this edition that some MANUFACTURERS might still want to rate their ME EQUIPMENT as CATEGORY AP or CATEGORY APG. In order to make this edition more usable (by removing the rarely used section on this topic) while maintaining the availability of the CATEGORY AP and CATEGORY APG RATINGS, the material has been moved to an annex and only this clause's brief reference to it remains in the body of the standard.

The final determination of whether ME EQUIPMENT should be RATED CATEGORY AP or CATEGORY APG should be determined by the MANUFACTURER based on the INTENDED USE. Requirements related to CATEGORY AP and CATEGORY APG are found in Annex G (see also the rationale for Annex G).

Copyright International Electrotechnical Commission
Provided by IHS Markit under license with IEC
No reproduction or networking permitted without license from IHS
Not for Resale, 08/26/2020 19:12:41 MDT

Subclause 11.5 – ME EQUIPMENT and ME SYSTEMS intended for use with flammable agents

While it was necessary to address cases where ME EQUIPMENT is used with flammable agents (such as some disinfectants) or in areas where they are commonly used and where the MANUFACTURER of the ME EQUIPMENT has given no special handling instructions or precautions, the variety of such agents, their volatility as well as many other determinant factors precludes giving specific instructions. The only reasonable solution in such cases is to assure that the MANUFACTURER evaluates and addresses the associated RISK.

A mixture of the vapour of a flammable disinfection or cleaning agent with air can be treated as a FLAMMABLE ANAESTHETIC MIXTURE WITH AIR subject to national or local regulations.

Subclause 11.6.2 – Overflow in ME EQUIPMENT

The purpose of this test is to assess not only whether the liquid actually wets any parts in a way that would adversely affect a MEANS OF PROTECTION or result in a HAZARD; but also whether a similar amount of liquid that could overflow on another occasion and reach the same parts of the ME EQUIPMENT, but possibly not land in exactly the same way, could adversely affect a MEANS OF PROTECTION or result in a HAZARD. The results of the test should be evaluated to assure they realistically represent conditions that will be experienced when the ME EQUIPMENT is used.

Subclause 11.6.3 – Spillage on ME EQUIPMENT and ME SYSTEMS

In addition to ME EQUIPMENT that requires the use of fluids~~, many types are~~ some ME EQUIPMENT is exposed to fluid spills as part of ~~their~~ REASONABLY FORESEEABLE MISUSES. In such cases spillage is considered NORMAL USE and the associated RISKS are addressed by the requirements of this subclause. Furthermore, as described in 9.4.2, tilting of TRANSPORTABLE ME EQUIPMENT to an angle of 10º is considered NORMAL USE. In such cases (as well as for ME EQUIPMENT requiring fluids) the amount and location where spills can occur vary greatly. Only a proper evaluation of the ME EQUIPMENT being tested can determine an appropriate application of the requirement. Doing such an evaluation is the responsibility of the MANUFACTURER and the results are to be provided to those performing the test (typically in the RISK MANAGEMENT FILE). This requirement would be an appropriate area for evaluation by writers of particular standards.

In accord with the principles outlined in IEC 62366 [76], where explicit warnings or safety notices (validated as described in IEC 62366-1) are given, failure to heed such warnings or safety notices is considered abuse of the ME EQUIPMENT that is beyond the responsibility of the MANUFACTURER. Therefore where such warnings or safety notices are given, the liquid reservoir is filled only to the intended fill level before being tilted to 10º. Where they are not given, the liquid reservoir is filled 15% above the intended level.

Examination of the NORMAL USE of ME EQUIPMENT should provide an adequate estimate of the amount of fluid that is likely to be spilled on it.

~~Spillage for equipment that does not require the use of fluids is considered to be a SINGLE FAULT CONDITION.~~

Subclause 11.6.4 – Leakage

Leakage is considered to be a SINGLE FAULT CONDITION.

Subclause 11.6.5 – Ingress of water and particulate matter into ME EQUIPMENT and ME SYSTEMS

Although it is unlikely that ME EQUIPMENT would be RATED for protection against particulate matter, IEC 60529 does address the possibility and it should be considered a valid option. The presence of any water or particulate matter inside the ENCLOSURE after testing in accordance with its IEC 60529 classification is regarded as a NORMAL CONDITION. The requirement is therefore to assess the possibility of a HAZARDOUS SITUATION due to such ingress in combination with a possible SINGLE FAULT CONDITION (such as an interrupted PROTECTIVE EARTH CONNECTION).

--`,,`,,`-`-`,,`,,`,`,,`---
Copyright International Electrotechnical Commission
Provided by IHS Markit under license with IEC
No reproduction or networking permitted without license from IHS
Not for Resale, 08/26/2020 19:12:41 MDT

Subclause 11.6.8 – Compatibility with substances used with the ME EQUIPMENT

ME EQUIPMENT, ACCESSORIES and parts thereof should be designed to be used safely with the substances with which they are intended to come into contact in NORMAL USE.

Where appropriate, particular standards should specify the corresponding requirements.

Subclause 11.8 – * Interruption of the power supply / SUPPLY MAINS to ME EQUIPMENT

Interruption of the power supply could result in a ~~HAZARD~~ HAZARDOUS SITUATION due to loss of functionality. This ~~HAZARD~~ HAZARDOUS SITUATION is dealt with in 7.9.2.4. Restoration of the power source can also result in HAZARDOUS SITUATIONS. Examples could include unintended activation of moving parts or resumption of dangerous outputs. These potentially HAZARDOUS SITUATION and the duration of the power interruption that could result in the ~~HAZARDS~~ HAZARDOUS SITUATIONS need to be considered as part of the RISK MANAGEMENT PROCESS.

IEC 61000-4-11 [21] defines general and reproducible conditions for the operation of electrical and electronic equipment if they undergo voltage dips, short interruptions and voltage variations. The voltage level and duration of short interruptions are defined in ~~Tables 210 and 211 of IEC 60601-1-2:2001~~ Table 5 of IEC 60601-1-2:2014 and IEC 60601-1-2:2014/AMD1:2020. IEC 60601-1-2 treats these short interruptions as a NORMAL CONDITION.

For ME EQUIPMENT in which the safety of the PATIENT depends on the continuity of the power, particular standards should include requirements regarding power failure alarms or other precautions.

Clause 12 – Accuracy of controls and instruments and protection against hazardous outputs

IEC 60601-1 is the guideline for all particular standards and, therefore, contain some requirements of a more general character in order to serve this purpose. For this reason, it is necessary to have some generally formulated requirements in Clause 12.

Standardization bodies, including those outside IEC, have adopted the system of this IEC publication in order to have a single uniform system of standards. In such cases it is most important to give a guideline in this clause.

This clause introduces the concept of USABILITY. The term was chosen over the commonly used terms of “user error” or “human error” because not all errors are the result of oversight or carelessness on the part of the OPERATOR of the ME EQUIPMENT. All too frequently, use errors are the direct result of poor human interface design that seduces the OPERATOR into an incorrect decision. Use errors caused by inadequate USABILITY have become an increasing cause for concern. The USABILITY ENGINEERING PROCESS described in IEC 60601-1-6 is intended to achieve reasonable USABILITY, which in turn is intended to minimise use errors and to minimise use associated RISKS.

Subclause 12.4.1 – Intentional exceeding of safety limits

If the control range of ME EQUIPMENT is such that the delivered output in a part of the range considerably differs from the output that is regarded as non-hazardous, means should be provided that prevent such a setting or that indicate to the OPERATOR (for example by means of an apparent additional resistance when the control is set or the bypassing of an interlock) that the selected setting is in excess of a safety limit.

Where appropriate, particular standards should specify safe output levels.

Subclause 12.4.3 – Accidental selection of excessive output values

Protection for the accidental selection of excessive output values can be obtained by appropriate steps to minimise the possibility to accidentally select excessive output, e.g. by interlocks in order to achieve deliberate action or by separated output terminals. In

Copyright International Electrotechnical Commission
Provided by IHS Markit under license with IEC
No reproduction or networking permitted without license from IHS
Not for Resale, 08/26/2020 19:12:41 MDT

considering the measures for protection, the standard on human factors could be taken into account.

Clause 13 – HAZARDOUS SITUATIONS and fault conditions

ME EQUIPMENT or its parts could result in ~~HAZARDS~~ HAZARDOUS SITUATIONS due to abnormal operation or fault conditions, which, therefore, needs to be investigated. While this clause identifies specific fault conditions, 4.7 requires that the RISK ANALYSIS be used to identify other failures which should be investigated.

Subclause 13.1.1 – General

While separation requirements (CREEPAGE DISTANCES and AIR CLEARNACES) and insulation requirements are detailed in Clause 8, these requirements should not be viewed as applying only to RISKS associated with electrical HAZARDS. In addition to the potential for electric currents to cause fibrillation (due to electric shock), these currents can also be the root cause of injuries not directly related to electric shock.

Examples of these other HAZARDS (related to inadequate or faulty insulation or short circuits across physical spacing used as insulation) could include sparks that could become a source of ignition of flammable materials (as discussed in Clause 11) or functional failures that could cause a loss of ESENTIAL PERFORMANCE. In these cases, compliance with the insulation requirements of Clause 8 should always be considered evidence that RISKS arising from the failure of insulation or spacing have been adequately addressed when evaluating the safety of ME EQUIPMENT.

Finally, it should be noted that the requirements for CREEPAGE DISTANCES and AIR CLEARNACES are not intended to be required at the circuit board level where there is no significant RISK that spacings will be compromised (shorted) by contaminates (from NORMAL USE or the manufacturing PROCESS) such as fluids or particulate matter (see also IEC 60529). In most applications, spacing between (for example) circuit board traces and component leads are not considered likely to fail. In cases where there is doubt as to whether spacing could fail (wherethe CREEPAGE DISTANCE and AIR CLEARNACE requirements of 8.9 are not met), the MANUFACTURER'S RISK ANALYSIS should evaluate the likelihood of shorting across such gaps, but only where such short-circuiting could directly result in unacceptable RIRKS. Where shorting across spacing or insulation failures are clearly not likely to result in unacceptable RISKS, such analysis should not be required.

Subclause 13.1.2 – Emissions, deformation of ENCLOSURE or exceeding maximum temperature

The delivery of unintended hazardous quantities of energy or substances to a PATIENT or into the natural environment could be addressed by particular standards.

Hazardous quantities of poisonous or ignitable gas depend on the type of gas, concentration, place of emission etc.

SINGLE FAULT CONDITIONS that might result in a small fire, but where the fire would remain contained within a fire ENCLOSURE, are acceptable because the containment will limit the effects to the area inside of the fire ENCLOSURE.

The NOTE in 13.1.2 is related to the 15 W limit when the investigated part of the supply circuit is a battery. It is intended to alert the reader that potentially hazardous energies inside the battery need to be considered. Therefore, the power dissipation needs to be measured directly on the output contacts of the battery, regardless of any external protection means.

~~At a power dissipation of less than 15 W in the absence of an increased oxygen concentration (see 11.2.2), no fire HAZARD exists. Where circuits could dissipate 15 W or greater, it should be demonstrated that components within such circuits will not cause fire, molten metal, etc. to propagate in such a way as to result in a HAZARD (by setting the surroundings on fire for example). However, as in IEC 61010-1 [22], it is considered that when such components are~~

Copyright International Electrotechnical Commission
Provided by IHS Markit under license with IEC
No reproduction or networking permitted without license from IHS
Not for Resale, 08/26/2020 19:12:41 MDT

~~enclosed in a fire ENCLOSURE as defined in 11.3, adequate protection from such propagation is provided.~~

The power level (15 Watts) cited in the original publication of this standard as the threshold below which ignition will not occur in normal ambient concentrations of oxygen was found to be significantly below the level used in IEC 61010-1 [22]. The original 15 W value was not based on any scientific test or research but came from “common practice” at some certification bodies (an anecdotal value only).

However, IEC 60950-1:2005 provides a variety of energy levels based on voltage ranging from 100 VA to 150 VA. For purposes of simplicity, the lowest of these values (100 VA) with minimal restrictions on construction were used as an alternative to the 15 W limit (without construction restrictions) originally used in this standard for ME EQUIPMENT in general.

Direct application of the requirements for limited energy circuits in IEC 60950-1:2005 can also be considered to assure that the RISK of fire has been reduced to acceptable levels at higher energies to demonstrate equivalent safety as well.

Since facilities where ME EQUIPMENT compliant with this standard is used will also contain information technology equipment and such equipment can be part of ME EQUIPMENT or ME SYSTEMS, it would be unreasonable to require the ME EQUIPMENT to offer a different level of protection against ignition than does the other equipment used in the same environment. Other end-product standards can provide an alternative means of protection against ignition.

It is felt that limiting the maximum temperatures for APPLIED PARTS to the NORMAL CONDITION values is appropriate because exceeding them is known to result in HARM and the PATIENT is frequently unable to pull away.

The restrictions of this subclause are regarded to be sufficient to avoid an enduring fire. A fire is not only dangerous by itself but has side effects such as destroying isolation barriers or destroying mechanical stability. These cannot be taken into account by the above limitations. Therefore, the MANUFACTURER needs to consider the following when coming to a conclusion:

– Obviously a limitation of 100 VA cannot guarantee 'no ignition'. Smaller components such as resistors, semiconductors etc. can be exposed to levels of power that could cause ignition. However, standards such as IEC 60950-1 and IEC 61010-1 and experience demonstrate that when such situations arise if the components are mounted on V-1 rated material an enduring fire is very unlikely to occur.
– Ignition could destroy isolation barriers exposing hazardous voltages. A device which is designed according to the requirements of this subclause should still be checked to determine whether such barriers would be affected and whether additional appropriate precautions independent of the requirements of this subclause.

Since no enduring fire will occur, the mechanical stability is regarded as maintained.

Subclause 13.1.2 Dashes 4 and 5

Interpretation Sheet 3 to IEC 60601-1 (IEC 60601-1:2005/ISH3:2013) allows surface temperatures up to 105 °C in SINGLE FAULT CONDITION under some circumstances. This is not considered appropriate for all type of materials, e.g. metal. Therefore, the requirement for maximum temperatures in SINGLE FAULT CONDITION for ACCESSIBLE PARTS are partially based on the state-of-the art standard IEC 62368-1:2018.

The test condition is different in IEC 62368-1:2018, where the limits are based on 25 °C ambient temperature, rather than the maximum specified ambient temperature. Based on review of ISO 13732-1:2006 [81], the temperature limits extracted from IEC 62368-1:2018 should be applied regardless of ambient temperature, since accepting higher surface temperatures could lead to a potential burn HAZARD resulting in an unacceptable HARM.

For the same reason, the limit for glass, porcelain and vitreous material has been set to 90 °C (instead of 95 °C) in this standard.

Copyright International Electrotechnical Commission
Provided by IHS Markit under license with IEC
No reproduction or networking permitted without license from IHS Not for Resale, 08/26/2020 19:12:41 MDT

Subclause 13.2.9 – Interruption and short circuiting of motor capacitors

The effect of functioning centrifugal switches can be taken into account. A locked rotor condition is specified because some capacitor motors might or might not start, causing variable results. Capacitor voltage is checked to assure that its dielectric will not be stressed causing the accumulation of hazardous gases including hydrogen.

While the short circuit or open circuit of the capacitor is a SINGLE FAULT CONDITION and locking of the rotor is also a SINGLE FAULT CONDITION (see 13.2.8) this is regarded as an instance of the situation referred to in 4.7, where one SINGLE FAULT CONDITION can result unavoidably in another SINGLE FAULT CONDITION and the two failures are considered as one SINGLE FAULT CONDITION.

Subclause 13.2.10 – Additional test criteria for motor operated ME EQUIPMENT and Table 26, last line

Temperature limits of motor windings in ME EQUIPMENT are determined after the first hour as an arithmetic average because experience of test houses has shown that ME EQUIPMENT for non-CONTINUOUS OPERATION reaches variable values that could temporarily differ from the maximum values. Therefore, lower temperature limits are required. The values in Table 26 are based on the requirements of IEC 60950-1:~~2001~~2005.

Subclause 13.2.13.1 – General overload test conditions

The ball pressure test is not intended to represent the exact conditions experienced in use. The test is performed at elevated temperatures to test the robustness (adequate safety factor) of the mechanical properties of the insulation. The principle is not unlike dielectric withstand testing which subjects insulation to voltages far in excess of those seen in use.

Subclause 13.2.13.4 – ME EQUIPMENT RATED for non-CONTINUOUS OPERATION

Where ME EQUIPMENT or parts thereof are RATED for non-CONTINUOUS OPERATION but controls allow OPERATORS to leave it in operation (should a medical or other emergency occur), the CONTINUOUS OPERATION of the ME EQUIPMENT is considered reasonably foreseeable misuse. Where safety is dependent on switching the ME EQUIPMENT or parts thereof off after a prescribed period, steps should be taken to assure that intentional action is not required to do so.

Clause 14 – PROGRAMMABLE ELECTRICAL MEDICAL SYSTEMS (PEMS)

Computers are increasingly used in ME EQUIPMENT, often in safety-critical roles. The use of computing technologies increases the level of complexity in ME EQUIPMENT. This complexity means that systematic failures can escape the practical limits of testing. Accordingly, this clause goes beyond traditional test and measurement of the finished ME EQUIPMENT and includes requirements for the PROCESSES by which it is developed. Testing of the finished product is not, by itself, adequate to address the safety of PROGRAMMABLE ~~ME EQUIPMENT~~ MEDICAL ELECTRICAL SYSTEMS.

For these reasons, this clause requires that a PROCESS with specific elements be established and followed. The intention is to establish these specific PROCESS elements, leaving the user of this clause to determine in detail how to accomplish them. This is similar to the approach taken in the ISO 9000 series. Because users of this clause are expected to be qualified to perform the identified activities, detail has been kept to a minimum.

While iteration of some elements of the PROCESS is expected, no specific requirements to do so have been included. These requirements were omitted because the need to repeat PROCESSES or portions of them is unique to each particular device. In addition, the need for such iteration will arise from the more detailed understanding that emerges during the design PROCESS.

Because users of this standard are required to establish, maintain and apply a RISK MANAGEMENT PROCESS as part of compliance, this clause establishes those characteristics

Copyright International Electrotechnical Commission
Provided by IHS Markit under license with IEC
No reproduction or networking permitted without license from IHS
Not for Resale, 08/26/2020 19:12:41 MDT

unique to programmable systems that should be considered as part of that PROCESS. Requirements for development and modification of medical device software have been specified in IEC 62304. The requirements from IEC 62304 that apply to development prior to placing a product in service are included by reference for the PEMS software.

There are some requirements in IEC 62304 that apply to software maintenance after a product has been placed into service. These requirements have not been included in the reference.

The effective application of Clause 14 will require, subject to the task in hand, competence in the following:

– application of the specific ME EQUIPMENT with emphasis on safety considerations;

– ME EQUIPMENT development PROCESS;

– methods by which safety is assured;

– techniques of RISK ANALYSIS and RISK CONTROL.

Requirements have been minimized to those that are essential to assuring BASIC SAFETY and ESSENTIAL PERFORMANCE. This has been done in recognition of the extensive and growing literature in the fields of software assurance and RISK ASSESSMENT techniques as well as the rapid evolution of this discipline.

Subclause 14.1 – General

This standard requires the application of a RISK MANAGEMENT PROCESS in accordance with ISO 14971. This is particularly relevant to PEMS, because of the difficulty of showing the correctness of software or complex hardware. Therefore the design of a PEMS has to be performed within a RISK MANAGEMENT PROCESS, in which RISK CONTROL measures are related to the RISKS being controlled. For a software PESS, the software safety requirements from subclause 4.3 of IEC 62304:2006 and IEC 62304:2006/AMD1:2015 and the software RISK MANAGEMENT requirements from Clause 7 of IEC 62304:2006 and IEC 62304:2006/AMD1:2015 are included. If the application of ~~ISO 14971~~ RISK MANAGEMENT shows that a PESS has the potential to contribute to a HAZARDOUS SITUATION, and non-software RISK CONTROL measures external to the PESS have not reduced the RISK to an acceptable level, Clause 14 adds extra RISK MANAGEMENT and life-cycle PROCESSES for the PEMS.

Compliance VERIFICATION requires the MANUFACTURER'S internal assessment to cover not only the requirements of this clause but also those of ~~ISO 14971~~ IEC 62304 that have been included by reference.

Compliance with the requirements of Clause 14 is judged by examining the documentation produced by the PROCESSES required in the various subclauses. ~~Clause 14 should be applied as a whole and not selectively. All of this documentation is required to be in the RISK MANAGEMENT FILE.~~

The concept of assessment has been introduced in the compliance statement to allow for methods other than inspection where necessary, such as audit. Thus, although there is no general requirement for the MANUFACTURER to operate a quality management system in accordance with ISO 13485 [30], certain features of such a system are necessary. One feature that is commonly regarded as essential for a quality management system to be effective is a PROCESS of audit and review performed within the organisation to confirm that it is actually following its own PROCEDURES; this is separate from any external assessment that could be performed to demonstrate compliance with standards or regulatory requirements. This standard, therefore, requires that the MANUFACTURER not only document certain aspects of the design PROCESS but also carry out an assessment to confirm that the requirements of this clause have been followed.

Subclause 14.2 – Documentation

The expected way by which compliance with PROCESS requirements can be determined is by assuring that the documentation required for each PROCESS step has been generated. While most of the requirements of ~~ISO 14971~~ 4.2 are crucial components of an adequate software

--`,,```,,,,````-`-`,,`,,`,`,,`---
Copyright International Electrotechnical Commission
Provided by IHS Markit under license with IEC
No reproduction or networking permitted without license from IHS
Not for Resale, 08/26/2020 19:12:41 MDT

life-cycle, Clause 14 contains many additional PROCESS steps not required by ~~that standard~~ 4.2. Therefore, the documentation that these additional PROCESS steps (in Clause 14) require is necessary for a certification body to determine that the PROCESS steps have been performed.

Because Clause 14 addresses those RISKS associated with PEMS, this documentation is ~~required to be included in~~ part of the RISK MANAGEMENT FILE.

Since compliance with Clause 14 is determined by inspection and assessment to assure that the required documentation has been generated, the quality and accuracy of these documents is important. Because demonstration of the safety of a PEMS depends on documentation, an effective system is needed to ensure the integrity of the documentation and, if different versions of a document exist, to identify the applicability of each version. Therefore it is required that the documents be generated, revised and maintained under a formal document control system. MANUFACTURERS should assure that this documentation is clear and comprehensive to assist in the assessment PROCESS.

Subclause 14.3 – RISK MANAGEMENT plan

~~ISO 14971~~ Subclause 4.2.2 requires that a RISK MANAGEMENT plan be prepared and maintained in the RISK MANAGEMENT FILE.

In addition to elements of the RISK MANAGEMENT plan required by ~~ISO 14971~~ 4.2.2, a PEMS VALIDATION plan is required because validation is seen as a necessary activity when developing a PEMS.

Subclause 14.4 – PEMS DEVELOPMENT LIFE-CYCLE

A documented life-cycle helps ensure that safety issues are considered throughout a product's development. This is important for all products and it is vital for PEMS. Safety cannot be added to a PEMS after it has been developed. Two reasons for this are as follows.

a) The actual PROCESSES used in the development of a PEMS, and the quality and rigour of those PROCESSES, are decided as a result of RISK ASSESSMENT. If it is discovered later on that inappropriate PROCESSES were used or that inadequate quality and rigour were applied, then the development will have to be repeated with correct PROCESSES.

b) Changes made at a late stage in the PEMS DEVELOPMENT LIFE-CYCLE are likely to be expensive (both in time and money). This is particularly true if a system requirement is incorrect or missing. System architecture can also be vulnerable to late changes. Often, the architecture is part of the safety case. Late changes can require significant rework in order to maintain the integrity of an architectural solution.

Framework

A life-cycle for the development of a product provides a framework that allows the necessary safety activities to take place in a timely and systematic manner. It should not impose unnecessary restrictions and it should ensure that all the required safety activities take place. The life-cycle needs to be decided early. Different life-cycle models are acceptable. Clause H.2 explains PEMS DEVELOPMENT LIFE-CYCLES in more detail. ~~IEC 62304 [26]~~ Clauses 5, 7, 8 and 9 of IEC 62304:2006 and IEC 62304:2006/AMD1:2015 describe the PROCESSES to be included in the software development life-cycle for the development of safe medical device software.

Milestones and activities

The requirement for milestones, and activities with inputs and outputs for each, ensures that due consideration is given to:

– the activities,

– what needs to be done before the activity can start, and

Copyright International Electrotechnical Commission
Provided by IHS Markit under license with IEC
No reproduction or networking permitted without license from IHS
Not for Resale, 08/26/2020 19:12:41 MDT

– what the activity needs to provide,

so that VERIFICATION of the results can be performed.

The sequence of activities in the life-cycle is required to be defined in terms of milestones because this offers the greatest flexibility to the MANUFACTURER. No requirement is made concerning the number or nature of the milestones, nor is there any implication that all project activities have to pass through the milestones simultaneously. This standard has not used the term “phases” although this term was used in IEC 60601-1-4 [14]. The term has been avoided because it is difficult to express concurrency and overlap in a phase model.

In a good life-cycle:

– the necessary activities are defined in advance of their performance;
– the PROCESSES used in development activities could be specified as an outcome of RISK MANAGEMENT;
– the sequence of activities is defined so as to ensure that necessary inputs to an activity are available before the activity starts;
– criteria are defined for deciding whether the activity has been satisfactorily completed; and
– accountability is facilitated.

Activities are defined in terms of inputs and outputs because it is simple to measure whether those inputs and outputs exist. The MANUFACTURER is responsible for deciding how the milestones are achieved and how the required documentation is produced.

In order to determine whether each activity has been satisfactorily completed, it is required that the criteria for VERIFICATION of each activity be defined. VERIFICATION examines whether the inputs have been transformed into the outputs completely, correctly and according to the required PROCESS. No requirement is made concerning the type or extent of VERIFICATION, except for VERIFICATION of RISK CONTROL measures and ESSENTIAL PERFORMANCE (see 14.10).

Subclause 14.5 – Problem resolution

Where appropriate, a documented system for problem resolution is required by this standard.

Problems can arise:

– with the product;
– within a PROCESS;
– between PROCESSES.

Examples of problems are:

– inconsistent requirements;
– ambiguous requirements;
– missing specifications;
– coding errors;
– incorrect operation of the PEMS.

A system for problem resolution is needed to ensure that when a problem arises, its impact on HAZARDS and their consequent RISK is managed. Ad hoc methods for resolving problems can undermine the benefits obtained by using a systematic life-cycle approach. An appropriate place to document the system for problem resolution is as part of the PEMS DEVELOPMENT LIFE-CYCLE.

Subclause 14.6.1 – Identification of known and foreseeable HAZARDS

PEMS have extra initiating causes for HAZARDS.

Copyright International Electrotechnical Commission
Provided by IHS Markit under license with IEC
No reproduction or networking permitted without license from IHS Not for Resale, 08/26/2020 19:12:41 MDT

Subclause 14.6.2 – RISK CONTROL

As the choice of the PROCEDURES and tools used by a MANUFACTURER for the development of a PEMS will be influenced by many factors, this subclause requires that one of the factors for the choice is the RISK reduction required for the RISK CONTROL measure. A RISK CONTROL measure that is developed using PROCEDURES and tools that are known to be good is more likely to carry out its intended functions than one developed using PROCEDURES and tools that are of unknown quality.

Subclause 14.7 – Requirement specification

RISK CONTROL measures are used to control the RISK of identified HAZARDS. The requirements for these measures are documented in requirement specifications. The requirement should both specify what the measure does and how well it does it. ~~ISO 14971~~ Subclause 4.2 does not demand a requirements specification.

Verifiable requirements

Requirements should be verifiable. This applies to both the function of the RISK CONTROL measure and how likely it is to perform correctly. Quantitative VERIFICATION of failure rates is, generally, impractical for software. VERIFICATION of a qualitative approach would be by verifying that the appropriate PROCESSES were used.

Identifiable safety requirements

The requirement to distinguish the RISK CONTROL measures and ESSENTIAL PERFORMANCE is needed to ensure that they are implemented and to ensure that if there is a need to change the ESSENTIAL PERFORMANCE or a RISK CONTROL measure, the impact of the change on the RESIDUAL RISK can be assessed.

Decomposition

Examples of a PEMS structure are shown in Annex H. Requirements to implement the RISK CONTROL measures should be specified for the PEMS and for any PESS that implements or partially implements one or more RISK CONTROL measure. This can be in a single document or in several documents.

Subclause 14.8 – Architecture

An architecture specification is not required by ~~ISO 14971~~ 4.2. It is an additional requirement for PEMS because:

– often the architecture chosen will be part of a RISK CONTROL measure. RISK CONTROL measures need to be explicit for complex systems such as a PEMS;

– architecture specifications are recognized as a necessary part of a good software development PROCESS such as is required for a PEMS.

There is a list of architecture features for inclusion in the specification where appropriate. This list has been selected because in particular circumstances one or more of the features could be used to control the RISK of a HAZARD. For example, the use of a COMPONENT WITH HIGH-INTEGRITY CHARACTERISTICS will effectively remove any RISK that would result from the failure of that component.

Subclause 14.8 e)

Partitioning of functionality can be useful when there is a significant need for rigorous safety validation of PEMS.

The software (firmware and application layers) is distinctly divided into critical, non-critical and supervisory sections. Partitioning is used so that the instructions and data of the critical, non-critical and supervisory sections do not interfere with each other and that there is separation of duties among the sections of the software. If there is no separation of duties

Copyright International Electrotechnical Commission
Provided by IHS Markit under license with IEC
No reproduction or networking permitted without license from IHS Not for Resale, 08/26/2020 19:12:41 MDT

among the sections of the software, all software should be defined as critical, to make sure that the analysis has taken into consideration the critical section of the software.

Requirements for separating critical code from non-critical code include RISK ASSESSMENT of the entire system, RISK CONTROL strategies employed, analysis of physical resources and an analysis of logical properties (e.g., control and data coupling). In general, partitioning should separate and isolate the safety-related functionality from the non-safety-related functionality in the design and implementation. This PROCESS can minimize, or at least reduce, the VERIFICATION necessary to assure that data shared by or passed to the critical section does not affect the specified operation of the safety critical code.

Partitioning includes the following steps:

a) identification of critical, non-critical and supervisory sections. The means of identification depends upon the modularity of the code, the programming language, the code design and other specification attributes;

b) description of the interfaces between the critical and non-critical sections:
   1) identification of data or variables global to the critical and non-critical sections, modules, etc., identified in step a);
   2) identification of any parameters that are passed between critical and non-critical sections, modules, etc., identified in step a);
   3) description of the flow of the data, variables or parameters identified in steps b) 1) and b) 2);
   4) description of the mechanism which is used to prevent data corruption, overwriting or other errors of the above identified data, variables or parameters which would affect safety critical performance;

c) validation of the integrity of the partition. This can be accomplished by functional testing and stress testing techniques.

Subclause 14.8 g) to n)

There is a list of items to be taken into consideration in the architecture specification. This list has been selected because each of these items could influence the choice of architecture.

Subclause 14.9 – Design and implementation

The technical solutions chosen need to be defined. It is often appropriate to decompose a PEMS into subsystems. Figure H.1 shows examples of PEMS/ PESS structures with different amounts of decomposition. Reasons for decomposing a PEMS could include the following.

Keeping the complexity of subsystems manageable

The less complex the system the easier it is to understand and consequently easier to design and then maintain. The resulting design is more likely to be correct and easier to test. Coding standards should specify limits for complexity.

Architecture

The system architecture could make it logical to separate systems e.g. if diverse systems are needed they should be implemented as distinct subsystems.

Modularity

Modularity can facilitate the provision of different system options, reuse of an existing proven subsystem and the extension of system functionality.

Copyright International Electrotechnical Commission
Provided by IHS Markit under license with IEC
No reproduction or networking permitted without license from IHS Not for Resale, 08/26/2020 19:12:41 MDT

Physical components

A sensible division of physical subsystems will help the diagnosis and repair of hardware faults.

Different technologies

Often different engineers will implement the hardware and the software design. In this case specifying each as a separate subsystem will enable each to be implemented independently.

The overall system will only function correctly if each of its constituent subsystems has been adequately specified. This leads to the requirement for a design specification for each subsystem. A design specification for a subsystem would typically include a detailed interface specification, and could include implementation details, e.g. algorithms.

Each subsystem should be tested to show that the design specification has been correctly implemented. This leads to the requirement for a test specification for each subsystem.

The design and test specifications can be documented in whatever form is practicable, e.g. they can be separate documents or they can be combined in a larger document. The design specification and the test specification for each subsystem should be identifiable.

Examples of the elements of the design environment are given in H.4 a). Such elements will have an influence on the quality and correctness of the design. Some elements will have been identified as the suitably validated tools and PROCEDURES (see 14.6.2). The descriptive data regarding the design environment facilitates VERIFICATION that the suitably validated tools and PROCEDURES have been used.

Subclause 14.10 – VERIFICATION

~~ISO 14971~~ Subclause 4.2 requires VERIFICATION of RISK CONTROL measures. There are additional requirements for PEMS. These are that:

– the ESSENTIAL PERFORMANCE is verified; and

– there is a VERIFICATION plan.

ESSENTIAL PERFORMANCE is significant for PEMS because the PEMS uses a PESS to control its functions. ESSENTIAL PERFORMANCE will often depend on the PEMS functions being carried out correctly.

A VERIFICATION plan leaves it up to the MANUFACTURER how to achieve the requirements of this clause. This is a better and more flexible approach than specifying how to verify a PEMS in this clause. The MANUFACTURER is responsible for planning the VERIFICATION so that it is adequately thorough and then to implement the plan.

The requirement lists activities that affect the thoroughness of the VERIFICATION and which need to be planned.

Subclause 14.11 – PEMS VALIDATION

The final phase of any PEMS DEVELOPMENT LIFE-CYCLE model is PEMS VALIDATION. PEMS VALIDATION is intended to assure that the right product is built. Validation is important for PEMS because unexpected interactions between functions might occur that can only be discovered by validation.

PEMS VALIDATION can include tests for a high volume of data, heavy loads or stresses, human factors, security, performance, configuration compatibility, fault testing, documentation and safety.

Independence is needed to avoid conflicts of interest and because the assumptions of the designer should not influence or limit the extent of the PEMS VALIDATION. Examples of level of independence include:

– separate person;

Copyright International Electrotechnical Commission
Provided by IHS Markit under license with IEC
No reproduction or networking permitted without license from IHS Not for Resale, 08/26/2020 19:12:41 MDT

– separate management;

– separate organization.

Subclause 14.12 – Modification

Typically the design of a PEMS is not completely new but is partly or even largely derived from earlier design(s). Nevertheless, it might be possible to treat the design as if it were completely new and to establish the RISK MANAGEMENT report and demonstrate compliance with the requirements of this standard without reference to previous documentation. If however the RISK MANAGEMENT report does need to include some information from the documentation of the previous design(s), it is then necessary to confirm that all such information remains valid despite the changes introduced in the new design.

Subclause 14.13 – ~~Connection of a PEMS by NETWORK/DATA COUPLING to other equipment~~ PEMS intended to be incorporated into an IT-NETWORK

Many hospitals are operating ME EQUIPMENT in a networked environment today. Originally, these ~~networks~~ IT-NETWORKS were installed to optimize business economic and technical area. For this, a fast electronic data interchange is required. Today, these ~~networks~~ IT-NETWORKS are used for medical applications within the hospital, between hospitals, and from home.

Initially, the use was only the exchange of laboratory data. Now there are large amounts of data transported over the ~~networks~~ IT-NETWORKS, such as medical image data. There are further requests from the user to get “real time” solutions (e.g. control of operation robots via ~~network~~ an IT-NETWORK).

Additional guidance on ~~NETWORK/DATA COUPLING~~ incorporation of a PEMS into an IT-NETWORK is found in Annex H.

Subclause 15.1– Arrangements of controls and indicators of ME EQUIPMENT

Controls, instruments, indicating lamps, etc. that are associated with a specific function of the ME EQUIPMENT should be grouped together.

Subclause 15.2 – Serviceability

The exchange of such parts is expected to be easy to perform, preferably without special TOOLS. In addition, the disassembly of the worn out part or of the part exchanged preventively and the assembly of the spare one should not ~~create a HAZARD~~ result in a HAZARDOUS SITUATION. To ensure this, the instructions for performing such activities have to be easy to understand and to follow, without introducing any RISK of mix-up.

Subclause 15.3.2 – Push test

ENCLOSURES need to have adequate rigidity if they are to maintain a level of protection from internal live parts. This requirement is harmonized with the force test of IEC 60950-1:2005. The force is dependent on the person handling the ME EQUIPMENT, not the weight of the ME EQUIPMENT. In most cases, the application of a force of 250 N is considered reasonably foreseeable. However there can be cases where a RISK ASSESSMENT finds that the 45 N force applied over an area of 625 mm^2, as required by the second edition of this standard, would continue to be an acceptable VERIFICATION method for determining an acceptable level of RISK. For example, ultrasound transducers and similar small HAND-HELD APPLIED PARTS, which balance the needs of robustness with other needs relating to efficacy and biocompatibility,have established track RECORDS of safety and effectiveness over many years, and therefore could continue to use the older VERIFICATION test.

Internal components are not subjected to the force test of IEC 60950-1 because their robustness is verified per the tests of 15.3.4 and 15.3.5.

Copyright International Electrotechnical Commission
Provided by IHS Markit under license with IEC
No reproduction or networking permitted without license from IHS
Not for Resale, 08/26/2020 19:12:41 MDT

Subclause 15.3.3 – Impact test

An ENCLOSURE'S resistance to impact is required to prevent unacceptable RISK during reasonably foreseeable misuse. The energy of the test impact approximates ME EQUIPMENT being accidentally struck by an object in the hand of a passer-by or by a broomstick or mop handle during cleaning of the floor. The test equipment has been simplified and harmonized with other standards containing ENCLOSURE impact requirements, including IEC 60950-1.

Where a MANUFACTURER feels the requirements of this subclause are not necessary to mitigate an unacceptable RISK, justification is documented in the RISK MANAGEMENT FILE per 4.5, along with an identification of alternate requirements met. For example, FIXED ME EQUIPMENT can have one side of the ENCLOSURE protected by the floor, wall or ceiling. The MANUFACTURER documents the evaluation of the probability that the ME EQUIPMENT could be moved or installed incorrectly. The MANUFACTURER also evaluates and identifies, through the RISK MANAGEMENT PROCESS, what resistance to impact the protected side of the ENCLOSURE needs to have to ensure no unacceptable RISKS are generated by failure to comply with the original requirements of this subclause.

Subclause 15.3.4 – Drop test

The tests for HAND-HELD ME EQUIPMENT or its parts that are hand held are different from the test for PORTABLE and MOBILE ME EQUIPMENT because of the difference in practical application.

A drop surface of wood of density > 600 kg/m^3 allows selection of most common hardwoods. Oak, beech, birch, ash and maple are acceptable. These varieties have similar hardness while hardwoods of density < 600 kg/m^3 (e.g. mahogany, elm, sweet gum, cherry) and softwoods have greatly decreased hardness in comparison.

Subclause 15.3.4.2 – PORTABLE ME EQUIPMENT

This test represents NORMAL USE, as explained in the rationale for 15.3.5. This test is not intended to represent reasonably foreseeable misuse. There is not currently a test that directly addresses free fall type reasonably foreseeable misuse, however it is felt the ball impact test in 15.3.3 represents foreseeable misuse, albeit indirectly. As stated in 4.2, if the RISK MANAGEMENT PROCESS concludes that a more severe test is appropriate, this should be done.

Subclause 15.3.5 – Rough handling test

Contrary to what is often assumed, ME EQUIPMENT can be used in a hostile environment. In case of emergency, ME EQUIPMENT is carried or wheeled on trolleys over doorsteps and into elevators and subjected to bumps and vibration. Such conditions can in fact typify NORMAL USE for some ME EQUIPMENT. Encountering obstacles is considered commonplace and quite reasonably foreseeable misuse. Not all obstacles are clearly marked and the OPERATOR cannot always stop the ME EQUIPMENT in time after having become aware of the obstacle

~~The test requirements of 15.3.5 are meant to judge resistance to rough handling, and not stability. Stability test requirements for MOBILE ME EQUIPMENT are in 9.4.~~

The 0,8 m/s speed together with the severity of the obstacles chosen, are considered to represent worst case reasonably foreseeable misuse levels of stress/shock energies. The intent of tis test is to ascertain the risks from damage caused by rough handling shock/stress. Instability is evaluated in 9.4.

The meaning of "in its normal direction of travel" is the direction(s) the ME EQUIPMENT is likely to travel at the maximum normal speed. For most cases, this would be the forward direction. Some ME EQUIPMENT, such as a bed, is likely to travel in a forward or backward direction, at normal speed, and therefore each test should be considered for each direction.

Subclause 15.3.6 – Mould stress relief test

Many thermoforming PROCESSES can leave residual stresses in plastics. Because polymer chains are held together by weak van der Waals bonds, these residual stresses can result in

Copyright International Electrotechnical Commission
Provided by IHS Markit under license with IEC
No reproduction or networking permitted without license from IHS
Not for Resale, 08/26/2020 19:12:41 MDT

viscous flow (deformation). Elevated temperature results in weakening of van der Waals bonds and an increase in the rate of viscous flow. Thermoplastics with low melting temperatures, such as polyethylene and polypropylene, are more susceptible to stress relief deformation than polymers with higher melting temperatures, such as polycarbonate and polyetheramide.

Compliance should be verified by analysis of the polymer properties, when possible. This VERIFICATION should consist of a documented comparison of the maximum temperature the polymer will be exposed to in NORMAL USE and the polymer manufacturer's recommended temperature use range.

Subclause 15.3.7 – Environmental influences

a) ME EQUIPMENT is often used or stored in environmental conditions that are within the INTENDED USE as declared by the MANUFACTER. In such cases no HAZARD is expected. However the environmental conditions could differ from those declared and still the ME EQUIPMENT is expected to remain safe. To ensure this, the RESPONSIBLE ORGANISATION has to perform the periodic inspection and maintenance prescribed by the MANUFACTURER. These activities are expected to prevent any deterioration of the safety level and also detect signs of commencing of any such deterioration. To ensure this, the instructions for preventive maintenance have to be easy to understand and to follow, without introducing any RISK for mix-ups or for overlooking of safety-relevant symptoms.

b) The exchange of such parts is expected to be easy to perform, preferably without special TOOLS. In addition, the disassembly of the worn out part or of the part exchanged preventively and the assembly of the spare one should not create a HAZARD. To ensure this, the instructions for performing such activities have to be easy to understand and to follow, without introducing any RISK of mix-up.

c) Corrosion of metal to metal interfaces should be taken into account.

Subclause 15.4.3 – Batteries

If a HAZARDOUS SITUATION might develop as a result of exhaustion of the battery, means should be provided to forewarn of this condition.

Where appropriate, particular standards should specify the corresponding requirement.

Subclause 15.4.3.5 – Excessive current and voltage protection

Subclause 4.7 requires the ME EQUIPMENT to be SINGLE FAULT SAFE. One possible fault could be the bridging of a CREEPAGE DISTANCE between the positive and negative terminals of an INTERNAL ELECTRICAL POWER SOURCE in the area between the INTERNAL ELECTRICAL POWER SOURCE and any protective device (see Figure A.23).

Copyright International Electrotechnical Commission
Provided by IHS Markit under license with IEC
No reproduction or networking permitted without license from IHS Not for Resale, 08/26/2020 19:12:41 MDT

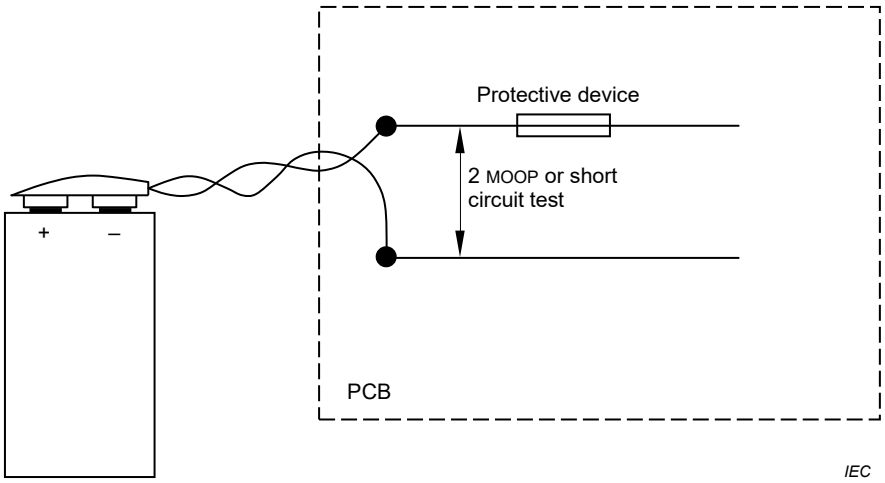

Figure A.23 – Example of the needed MEANS OF OPERATOR PROTECTION between the terminals of an INTERNAL ELECTRICAL POWER SOURCE and a subsequent protective device

A short circuit test would be required to demonstrate that this area is SINGLE FAULT SAFE unless two MEANS OF OPERATOR PROTECTION are present. In that case, the test can be omitted.

Subclause 15.4.4 – Indicators

It is important for an OPERATOR and SERVICE PERSONNEL to be able to determine the functional status of ME EQUIPMENT. In NORMAL USE, the OPERATOR needs to be able to distinguish between ME EQUIPMENT in stand-by and ME EQUIPMENT in a fully functional state. Some ME EQUIPMENT has an extended warm-up period. Other ME EQUIPMENT has standby or battery charging modes.

It can be hazardous for ME EQUIPMENT to be left unattended in the wrong state. SERVICE PERSONNEL need to be able to determine when ME EQUIPMENT is energized to avoid HAZARDS.

Subclause 15.4.7.3 – Entry of liquids

The former IPX8 rating requirement for foot switches amounts to no more than “greater protection than IPX7.” By making this requirement IPX6 minimum, the requirement sets a defined level of protection while allowing higher levels where appropriate.

For equipment used on the floor in areas where liquids are usually not found, the IPX1 requirement is included because it is considered extremely likely that some wetting will occur.

Subclause 15.5 – MAINS SUPPLY TRANSFORMERS of ME EQUIPMENT and transformers providing separation in accordance with 8.5

The addition of “and transformers providing separation in accordance with 8.5” to the original title that only identified “Mains transformers” is intentional. The tests for transformers should be utilized any time that the transformer is used to establish separation between OPERATORS, PATIENTS, etc. and a HAZARD.

Revisions to 15.5 do not change significantly current methods (including those of the second edition of this standard) of testing. The methods and requirements were simplified and now include all different types of protectors like: PTCs, feedback control (switch mode power supplies), primary or secondary over-current devices, etc. Those transformers that have not been tested in accordance with the 5X frequency and 5X voltage tests of 15.5.2 to establish the adequacy of insulation between the turns of a winding that are shorted at the terminals (rather than external to the transformer) to assure that failure of that insulation will not cause maximum allowable temperatures to be exceeded.

Copyright International Electrotechnical Commission
Provided by IHS Markit under license with IEC
No reproduction or networking permitted without license from IHS
Not for Resale, 08/26/2020 19:12:41 MDT

Because of the difficulties that would be encountered when trying to test transformers that are RATED for high frequencies (such as those used in switch mode power supplies), the 2X frequency and voltage tests are specified in those cases as well. The second edition only applied this test where the voltage exceeded 500 V.

Subclause 15.5.1.1 – Transformers

Output windings are required to be “tested in turn” because under overload conditions, testing all windings simultaneously can cause over temperature devices to operate which would not operate if only one winding was being overloaded. A single output winding being overloaded is actually quite likely. Therefore this combination of conditions is considered the likely worst case scenario.

The intent of the requirement is to test under the worst-case condition (nearly always with either a full load or no-load). Such a worst case can be determined through evaluation of the transformer design or by performing a few spot tests. Generally, testing all possible conditions to determine worst case is unnecessary.

The limits of Table 31 are applied at a 25 °C ambient because of the impracticality of performing the overload and short tests inside of a thermal chamber.

Subclause 15.5.2 – Dielectric strength

It is necessary to raise the frequency of the test voltage in proportion to the voltage to prevent saturation of the magnetic core and consequent very high current.

The electrical insulation between the primary winding and other windings, screens and the core of a MAINS SUPPLY TRANSFORMER is presumed to have been investigated by the dielectric strength tests performed on the assembled ME EQUIPMENT as described in 8.8.3. The dielectric strength tests of 8.8.3 need not be repeated.

Subclause 15.5.3 – Construction of transformers used to provide separation as required by 8.5

~~The requirements specified in IEC 61558-1, Subclause 5.12 are generally similar to those in the second edition of this standard but transformers complying with them are likely to be more readily available.~~

The original citation of subclause 5.12 of IEC 61558-1 was made incorrect by modifications to the 61558 series. In reviewing the revised IEC 61558 standards, it was determined that citation of the standard would not reduce the cost of transformers or provide any other benefits since the spacing and dielectric requirements of IEC 60601-1 would be required to be applied to provide MEANS OF PATIENT PROTECTION. For this reason, the citation was deleted, and the principles of the second edition of IEC 60601-1 were employed with reference to spacing and dielectric requirements of the third edition. Where only MEANS OF OPERATOR PROTECTION is required, transformers constructed for use in IEC 60950-1 equipment should be considered acceptable.

Additionally, Annex U of IEC 60950-1:~~2001~~2005, IEC 60950-1:2005/AMD1:2009 and IEC 60950-1/AMD2:2013 includes requirements relating to the use of triple-insulated winding wire in transformers instead of a separate layer of insulation between windings (as would be traditionally be provided by bobbins for example). Transformers which use this method of separation between windings and which comply with all other requirements of this standard should generally be considered to provide an adequate level of BASIC SAFETY.

It was noticed during the evaluation, that transformers complying with IEC 62368-1:2018, will use FIW (fully insulated winding wire) instead of TIW (triple-insulated winding wire). As a result of the comparison, it was considered that the use of this FIW is acceptable for MEANS OF OPERATOR PROTECTION (MOOP) only. The use of FIW as MEANS OF PATIENT PROTECTION (MOPP) needs further investigation during the development of the fourth edition before an alternative test method to comply with the requirements for MOPP can be implemented in the normative text of Annex L.

Copyright International Electrotechnical Commission
Provided by IHS Markit under license with IEC
No reproduction or networking permitted without license from IHS Not for Resale, 08/26/2020 19:12:41 MDT

Clause 16 – ME SYSTEMS

Increasingly, ME EQUIPMENT is being combined with other pieces of equipment that might not have originally been intended for medical application to create systems where one or more of the elements of the system come into contact with the PATIENT. Clause 16 provides requirements to ensure the safety of the PATIENT who could come into contact with ME SYSTEMS.

Clause 16 on ME SYSTEMS is intended to be used by MANUFACTURERS of combinations of electrical equipment that include one or more items of ME EQUIPMENT. The equipment can be separate items or can be in a single ENCLOSURE or a combination of these cases.

Clause 16 is also intended to be used by personnel from institutions for medical practice who assemble or adapt ME SYSTEMS, as they can become the MANUFACTURER by that action. In this case, engineering expertise in the application of the electrical equipment design standards is required to ensure that the ME SYSTEM complies with all requirements of Clause 16.

More and more, such ME SYSTEMS comprise equipment originally manufactured for use in different specific application fields, not necessarily medical, that are connected with each other in a direct or indirect way. ME EQUIPMENT complying with this standard can be connected with other, non-ME EQUIPMENT. The latter equipment might fully meet the requirements in the safety standards applicable in their specific application field. However, they do not always comply with the safety requirements for ME EQUIPMENT and, thereby, influence the safety of the whole ME SYSTEM. It is for this reason that the MANUFACTURER is required to apply RISK MANAGEMENT to the whole ME SYSTEM. One example of an additional HAZARD is the ignition of fire when an ME SYSTEM containing non-ME EQUIPMENT is used in an OXYGEN RICH ENVIRONMENT, possibly accidentally.

The electrical equipment can be situated either in a medically used room that is intended for diagnosis, treatment or monitoring of PATIENTS, or in a non-medically used room where no medical practice is performed. Within a medically used room, electrical equipment might be placed inside or outside a volume that is defined as PATIENT ENVIRONMENT.

There are two situations possible in medical practice.

a) Where Clause 16 does not apply

   Simultaneously operated ME EQUIPMENT, i.e. different ME EQUIPMENT connected at the same time to a PATIENT but not connected to each other. Such ME EQUIPMENT can influence each other. For example, high-frequency surgical equipment in the operating theatre can influence PATIENT monitoring.

   NOTE Assistance can be available from the instructions for use for each ME EQUIPMENT.

b) Where Clause 16 applies

   ME SYSTEMS, consisting of ME EQUIPMENT and possibly also non-ME EQUIPMENT, interconnected permanently or temporarily for a certain purpose such as diagnosis or treatment of a PATIENT. Examples: ME SYSTEMS for diagnostic X-ray examination, endoscopes with video camera, PATIENT monitoring, ultrasound equipment with a personal computer, computed tomography or magnetic resonance imaging.

   The various parts of such an ME SYSTEM could be situated within the PATIENT ENVIRONMENT or outside it but still within a medically used room, or parts of the ME SYSTEM could be located in a non-medically used room containing, for example, electrical power distribution or data processing equipment.

Copyright International Electrotechnical Commission
Provided by IHS Markit under license with IEC
No reproduction or networking permitted without license from IHS Not for Resale, 08/26/2020 19:12:41 MDT

Subclause 16.1 – General requirements for the ME SYSTEMS

The basic requirement for the safety of ME SYSTEMS is that, after installation or subsequent modification, an ME SYSTEM does not result in an unacceptable RISK. Compliance with the requirements imposed on ME SYSTEMS in this standard will imply that the RESIDUAL RISK is presumed to be acceptable, unless there is OBJECTIVE EVIDENCE to the contrary.

The MANUFACTURER of ME SYSTEMS that can be reconfigured by the OPERATOR or the RESPONSIBLE ORGANIZATION could be challenged to provide information on all possible combinations of the equipment, which could represent an unreasonable burden. RISK MANAGEMENT methods provide a very adequate means of determining which combination of items constitutes the largest RISKS, and which measures need to be taken to provide for the adequate level of safety. Ultimately, compliance testing can be done after assembly of the complete ME SYSTEM.

Appropriate documentation concerning the standards compliance can be a declaration of conformity by the MANUFACTURER or a certificate from a test house.

ME SYSTEMS, by their nature, can be frequently modified; Clause 16 does not apply to the modification of individual items in an ME SYSTEM

Subclause 16.2 – ACCOMPANYING DOCUMENTS of an ME SYSTEM

The documents that accompany an ME SYSTEM intended for DIRECT CARDIAC APPLICATION should provide data on such items as:

– use of rubber gloves;

– use of stop-cocks made of insulating material;

– minimum distances between PATIENT and equipment being part of the ME SYSTEM (PATIENT ENVIRONMENT);

– instructions about how to use the ME EQUIPMENT in the typical medical application, for example, use of a catheter.

For safety reasons, particular attention should be paid to the different levels of RISK when, within the PATIENT ENVIRONMENT, electrodes or other body sensors are used on the PATIENT, externally and internally, including direct connections to the heart.

Possible connections to the heart of a PATIENT should be kept isolated from the equipment.

The warning not to place MULTIPLE SOCKET-OUTLETS on the floor is to prevent the ingress of liquids and to prevent mechanical damage.

Furthermore, measures should be taken to ensure that, when assembling or modifying an ME SYSTEM incorporating MULTIPLE SOCKET-OUTLETS, these are mounted in such a way as to prevent ingress of liquids and to avoid mechanical damage during NORMAL USE and transportation.

Relevant safety standards for non-ME EQUIPMENT could specify or require disclosure of permissible environmental conditions. Accordingly, the environmental conditions permitted for various items in an ME SYSTEM can be different. The permissible environmental conditions for the ME SYSTEM is to be specified so that no ~~HAZARD~~ HAZARDOUS SITUATION will arise when operating it within these specified limits.

Subclause 16.3 – Power supply

This requirement is to ensure the safety according to IEC 60601-1 at the ME SYSTEM level.

BASIC SAFETY after assembly is maintained, for example, by one or more of the following measures:

– measures that are built-in within the ME EQUIPMENT, for example, separation of relevant circuits;

– SEPARATION DEVICES provided as ACCESSORIES to the ME EQUIPMENT (see 16.5);

Copyright International Electrotechnical Commission
Provided by IHS Markit under license with IEC
No reproduction or networking permitted without license from IHS Not for Resale, 08/26/2020 19:12:41 MDT

– SEPARATION DEVICES provided as ACCESSORIES to the ME SYSTEM;

– separating transformer;

– additional PROTECTIVE EARTH CONDUCTORS.

Non-ME EQUIPMENT can provide the specified power supply for ME EQUIPMENT in accordance with 5.5 f), 7.9.2.14 and 8.2.1.

Subclause 16.5 – SEPARATION DEVICES

The BASIC SAFETY of some ME EQUIPMENT depends on the precondition that any SIGNAL INPUT/OUTPUT PARTS are connected only to equipment that is specified for this purpose, otherwise LEAKAGE CURRENTS could be increased by unwanted currents flowing through signal cables.

HAZARDOUS SITUATIONS could occur if the SIGNAL INPUT/OUTPUT PART of ME EQUIPMENT is connected to equipment outside the medically used room, possibly in another building and therefore connected to another mains supply branch circuit.

A SEPARATION DEVICE prevents a ~~HAZARD~~ HAZARDOUS SITUATION to the PATIENT or OPERATOR. Additionally, the inclusion of the SEPARATION DEVICE helps to avoid ~~HAZARDS~~ HAZARDOUS SITUATIONS through malfunction of equipment caused by unwanted currents flowing through cables.

The need for a SEPARATION DEVICE depends on the configuration of the ME SYSTEM.

Subclause 16.6 – LEAKAGE CURRENTS

Relevant standards for some non-ME EQUIPMENT can have limits for TOUCH CURRENTS that are higher than required by Clause 16; these higher limits are acceptable only outside the PATIENT ENVIRONMENT. It is essential to reduce TOUCH CURRENTS when non-ME EQUIPMENT is to be used within the PATIENT ENVIRONMENT. LEAKAGE CURRENT reduction measures can include:

– additional PROTECTIVELY EARTHED parts;

– a separating transformer;

– an additional non-conductive ENCLOSURE.

Interconnecting cables and their connector housings are parts of the ENCLOSURE and therefore the LEAKAGE CURRENT limits within the PATIENT ENVIRONMENT, as required in 16.6.1, are applicable.

If a MULTIPLE SOCKET-OUTLET without a separating transformer is used, the interruption of its protective earthing could result in TOUCH CURRENTS equal to the sum of the individual EARTH LEAKAGE CURRENTS.

Subclause 16.6.3 – PATIENT LEAKAGE CURRENT

For ME EQUIPMENT, the maximum allowed values for PATIENT LEAKAGE CURRENT and total PATIENT LEAKAGE CURRENT (applicable with several APPLIED PARTS connected to the ME EQUIPMENT) are given in Table 3 and Table 4; see also 8.7.3. An ME SYSTEM is to provide the equivalent level of safety as provided by ME EQUIPMENT within the PATIENT ENVIRONMENT (see 16.1). Therefore, the same maximum values for PATIENT LEAKAGE CURRENT and total PATIENT LEAKAGE CURRENT apply, regardless whether the APPLIED PARTS are connected to the same element of the ME SYSTEM or not. This holds for the operation of the ME SYSTEM in NORMAL CONDITION, as the single fault concept is not applicable to an ME SYSTEM.

It should be noted that combinations of equipment or of APPLIED PARTS, made by the RESPONSIBLE ORGANIZATION or OPERATOR, that are outside the range of combinations indicated by the MANUFACTURER, could lead to HAZARDOUS SITUATIONS. This warning holds in particular when combinations of equipment are used for medical purposes on the same PATIENT, which have not been intended by their MANUFACTURER(S) to be used in such combinations.

Copyright International Electrotechnical Commission
Provided by IHS Markit under license with IEC
No reproduction or networking permitted without license from IHS
Not for Resale, 08/26/2020 19:12:41 MDT

Subclause 16.7 – Protection against MECHANICAL HAZARDS

Attention should be paid to the effects of interruptions causing unplanned movements, removal of compression forces, and the safe removal of PATIENTS from the PATIENT ENVIRONMENT when a HAZARDOUS SITUATION occurs.

Subclause 16.9.2.1 – MULTIPLE SOCKET-OUTLET

The second edition of this standard used the defined term “auxiliary mains socket-outlet (AMSO)” to describe a socket-outlet intended for provision of mains supply to other ME EQUIPMENT or to other separate parts of the ME EQUIPMENT. The systems collateral standard, IEC 60601-1-1 [13], defined a term “multiple portable socket-outlet (MPSO)”. The two terms have been combined into a new term, “MULTIPLE SOCKET-OUTLET (MSO).” Subclause 57.2 e) of the second edition required that an AMSO be designed so that it could not accept a MAINS PLUG. An exception for emergency trolleys was allowed. With the combination of the two definitions and the change to 8.11.2 to require any MSO on ME EQUIPMENT to comply with 16.9.2.1, the need for rapid exchange in an emergency situation is reconciled with the need to restrict LEAKAGE CURRENT.

Reassignment of the mains connection for the ME SYSTEM is a dangerous practice and beyond the scope of this clause. See 16.2 for disclosure requirements.

Excessive TOUCH CURRENTS can occur unless casual access for additional equipment connections is impeded or prevented.

~~**Subclause 16.9.2.1 c), 3rd dash**~~

~~ME EQUIPMENT with a non-DETACHABLE POWER SUPPLY CORD has an impedance between the protective earth pin in the MAINS PLUG and any part that is PROTECTIVELY EARTHED that does not exceed 200 mΩ. Similarly, the MULTIPLE SOCKET-OUTLET has an impedance that does not exceed 200 mΩ between its MAINS PLUG and its socket-outlets. This results in an impedance that does not exceed 400 mΩ between the MULTIPLE SOCKET-OUTLET MAINS PLUG and any part of ME EQUIPMENT that is PROTECTIVELY EARTHED.~~

~~The impedance of PROTECTIVE EARTH CONNECTIONS is allowed to exceed 200 mΩ when the relevant circuits have limited current capability (see 8.6.4 b)). In such cases in ME EQUIPMENT, this results in an impedance between the protective earth pin in the MAINS PLUG and any part that is PROTECTIVELY EARTHED that exceeds 400 mΩ.~~

Subclause 16.9.2.1 d)

The TOUCH CURRENT of the ME SYSTEM must be less than 500 µA in SINGLE FAULT CONDITION. A separating transformer can be used as a measure to reduce that TOUCH CURRENT. Therefore a separating transformer with BASIC INSULATION is sufficient. The DOUBLE or REINFORCED INSULATION as required for isolating transformers is not needed.

Transformers providing a greater degree of safety e.g. ones constructed to IEC 60601-1 requirements or to the isolating transformer requirements in other parts of the IEC 61558 series, e.g. IEC 61558-2-4 [63] or IEC 61558-2-23 [64], are also acceptable.

The CLASS I requirement for the transformer assembly is necessary to provide connected equipment with a PROTECTIVE EARTH CONNECTION.

Isolation monitoring of the separating transformer is not necessary. SINGLE FAULT CONDITION can be detected during routine maintenance and the occurrence of two independent SINGLE FAULT CONDITIONS is of no concern. The transformer construction can be of a type with or without a PROTECTIVELY EARTHED centre tapped secondary winding.

Subclause 16.9.2.2 – PROTECTIVE EARTH CONNECTIONS in ME SYSTEMS

All PROTECTIVE EARTH CONDUCTORS and POWER SUPPLY CORDS should be routed together.

--`,,```,,,,````-`-`,,`,,`,`,,`---

Copyright International Electrotechnical Commission
Provided by IHS Markit under license with IEC
No reproduction or networking permitted without license from IHS Not for Resale, 08/26/2020 19:12:41 MDT

When a MULTIPLE SOCKET-OUTLET is used to construct an ME SYSTEM, each individual item of equipment plugged in to the MULTIPLE SOCKET-OUTLET needs to meet the relevant ME EQUIPMENT or non-ME EQUIPMENT requirements. The total protective earth impedance when tested as a complete system according to 8.6.4 needs to meet the highest impedance requirement from 8.6.4. a) (i.e. shall not exceed 200 mΩ). This might require measures such as using short power supply cords within the ME SYSTEM and using a POWER SUPPLY CORD for the MULTIPLE SOCKET-OUTLET of greater cross-sectional area than is necessary for current carrying purposes to reduce its protective earth impedance. It is unacceptable practice to connect MULTIPLE SOCKET-OUTLETS in series.

In the design of some ME SYSTEMS, pathway of a fault current caused by a live part to a PROTECTIVE EARTH CONNECTION fault is protected by additional intermediate circuit breakers or fuses. Provided that such intermediate circuit breakers or fuses have a current ratings 13 A or lower, a total protective earth impedance up to 400 mΩ is acceptable.

In the presence of a fault from SUPPLY MAINS to PROTECTIVELY EARTHED parts for certain allowed SUPPLY MAINS installation configurations, a touch voltage can appear on earthed conductive ACCESSIBLE PARTS for an extended time if the protective earth resistance is greater than 400 mΩ and the SUPPLY MAINS fuse is greater than 13 A.

Data in IEC 60479-1 [73] indicates that it is possible for such touch voltage (which results in a touch current) combined with an extended disconnection time present a RISK of ventricular fibrillation (see Figure 20 and Table 11 in IEC 60479-1:2018).

Within the PATIENT ENVIRONMENT it is important to limit potential differences between different parts of an ME SYSTEM, and an adequate connection with a protective earthing system plays an important role in limiting that potential difference. It is therefore important to prevent interruption of that protective means to any part of the ME SYSTEM.

– The additional protective earthing could be used when the TOUCH CURRENT in SINGLE FAULT CONDITION exceeds the allowable limits.
– The additional protective earthing is not necessary for ME EQUIPMENT complying with this standard. However, in the case of non-ME EQUIPMENT this will prevent TOUCH CURRENTS exceeding allowable limits.
– The use of a TOOL is not required to disconnect the MAINS PLUG because the MAINS PLUG will disconnect both the mains and the protective earth.

Clause 17 – Electromagnetic compatibility of ME EQUIPMENT and ME SYSTEMS

IEC 60601-1-2 specifies electromagnetic immunity test levels to minimize the effect of the electromagnetic environment on the ME EQUIPMENT and ME SYSTEMS covered by this standard. It specifies electromagnetic emissions limits to minimize the effect on other equipment of electromagnetic disturbances that could be emitted, intentionally or unintentionally, by ME EQUIPMENT and ME SYSTEMS. It also specifies requirements for identification, marking and documents so that the MANUFACTURER of the ME EQUIPMENT or ME SYSTEM provides information to the RESPONSIBLE ORGANIZATION that is essential in determining the suitability of the ME EQUIPMENT or ME SYSTEM for the electromagnetic environment of use, and in managing the electromagnetic environment of use to permit the ME EQUIPMENT or ME SYSTEM to maintain BASIC SAFETY and provide its ESSENTIAL PERFORMANCE without disturbing other equipment.

Electromagnetic emission requirements are necessary for the protection of:

– safety services (e.g. police, fire and ambulance communications);
– other ME EQUIPMENT and ME SYSTEMS;
– non-ME EQUIPMENT (e.g. computers);
– telecommunications (e.g. radio/TV, telephone, radio-navigation).

More importantly, electromagnetic immunity requirements are necessary to assure that ME EQUIPMENT and ME SYSTEMS maintain BASIC SAFETY and continue to provide their ESSENTIAL

--`,,`,,`,`,,`,,,,,,,,,,`,`,`,,`,,,`,,`,`,,`---

Copyright International Electrotechnical Commission
Provided by IHS Markit under license with IEC
No reproduction or networking permitted without license from IHS Not for Resale, 08/26/2020 19:12:41 MDT

PERFORMANCE in the presence of the electromagnetic disturbances to which they can be expected to be exposed during NORMAL USE.

Annex G – Protection against HAZARDS of ignition of flammable anaesthetic mixtures (see also the rationale for 11.4)

Section six of the second edition of this standard has been moved to a normative annex. This was done in recognition of the fact that flammable anaesthetics are rarely used and their use is expected to cease entirely within a short period. However, it is also recognized that the practice of medicine changes frequently and that even now some MANUFACTURERS might still want to offer ME EQUIPMENT for such applications. In order to assure that the material contained in Section six along with the associated CATEGORY AP and CATEGORY APG RATINGS remain available while improving the readability of the standard for most users, the material has been moved to Annex G.

Subclause G.1.3 – Requirements for ME EQUIPMENT

The most devastating accidents with flammable anaesthetic agents occur when the mixture of the agent with oxygen normally used is that which will cause the most rapid combustion, a state that sometimes is described as “detonation optimum.” The worst example of such an agent is cyclopropane, while the oxygen/ether mixture normally used is far below that point.

Subclause G.5.3 – Low-energy circuits

The graphs of Figure G.1, Figure G.2 and Figure G.3 are given to assist in the design of circuits that fulfil the requirements for allowable limits stated for CATEGORY AP ME EQUIPMENT without performing the ignition test.

Extrapolation for higher voltages is not valid because the ignition condition of gases changes at higher voltages. The limit for inductances is introduced because high inductance values generally produce higher voltages.

Subclause G.5.4 – External ventilation with internal overpressure

The amount of air or inert gas escaping from the ME EQUIPMENT by leakage is assumed to be limited so that hygienic conditions in the medically used room are not disturbed appreciably.

For the purposes of G.5.4 and G.5.5 the term “enclosure” can represent either the ENCLOSURE as defined in 3.26 or a distinct compartment or housing.

Subclause G.5.5 – ENCLOSURES with restricted breathing

Subclause G.5.5 a)

This requirement is regarded as sufficient to prevent ignition in NORMAL USE during an operational period of several hours since average conditions in NORMAL USE are less stringent.

Subclause G.6.2 – Power supply

This requirement prevents the introduction of voltages higher than those permitted by G.6.3. Such voltages can exist on earth wiring.

Subclause G.6.3 – Temperatures and low-energy circuits

The graphs of Figure G.4, Figure G.5 and Figure G.6 are given to assist in the design of circuits that fulfil the requirements for allowable limits stated for CATEGORY APG ME EQUIPMENT, without performing the ignition test.

Copyright International Electrotechnical Commission
Provided by IHS Markit under license with IEC
No reproduction or networking permitted without license from IHS Not for Resale, 08/26/2020 19:12:41 MDT

Annex B
(informative)

Sequence of testing

B.1 General

Tests should, if applicable, be performed in the sequence indicated below, unless otherwise stated by particular standards. See also 5.8.

However, this does not preclude the possibility of conducting a test that preliminary inspection suggests might cause failure.

The tests for radiation HAZARDS in Clause 10, biocompatibility in 11.7, USABILITY in 12.2, ALARM SYSTEMS in 12.3, PEMS in Clause 14 and electromagnetic compatibility in Clause 17 can be performed independently from the tests in the following sequence.

The tests specified for ME SYSTEMS in Clause 16 should be performed in the same sequence as the tests for ME EQUIPMENT.

B.2 RISK MANAGEMENT PROCESS for ME EQUIPMENT or ME SYSTEMS and ESSENTIAL PERFORMANCE

See 4.2 and 4.3.

B.3 General requirements

See 4.1, 4.5 to 4.10 (inclusive) and 5.1 to 5.7(inclusive).

B.4 Classification of ME EQUIPMENT and ME SYSTEMS

See Clause 6.

B.5 Determination of APPLIED PARTS and ACCESSIBLE PARTS

See 5.9.

B.6 ME EQUIPMENT identification, marking and documents

See 7.2 to ~~7.8.2~~ 7.9 (inclusive), Annex C.

B.7 Energy consumption (power input)

See 4.11.

B.8 Limitation of voltage, current or energy

See 8.4.

B.9 Separation of parts

See 8.5.1 to 8.5.4 (inclusive).

Copyright International Electrotechnical Commission
Provided by IHS Markit under license with IEC
No reproduction or networking permitted without license from IHS
Not for Resale, 08/26/2020 19:12:41 MDT

B.10 CREEPAGE DISTANCES and AIR CLEARANCES

See 8.9.

B.11 HAZARDS associated with moving parts

See 9.2 except 9.2.2.4.1.

B.12 HAZARD associated with surfaces, corners and edges

See 9.3.

B.13 Serviceability

See 15.2.

B.14 Accuracy of controls and instruments and protection against hazardous outputs

See 12.1 and 12.4.

B.15 Instability HAZARDS

See 9.4.

B.16 Noise, vibration and acoustic energy

See 9.6.

B.17 Interruption of the power supply / SUPPLY MAINS to ME EQUIPMENT

See 11.8.

B.18 Protective earthing, functional earthing and potential equalization of ME EQUIPMENT

See 8.6.

B.19 Excessive temperatures in ME EQUIPMENT

See 11.1.

B.20 LEAKAGE CURRENTS and PATIENT AUXILIARY CURRENTS and dielectric strength at steady-state operating temperature

See 8.4.2 and 8.7 and 8.8.3.

B.21 Humidity preconditioning treatment

See 5.7.

Copyright International Electrotechnical Commission
Provided by IHS Markit under license with IEC
No reproduction or networking permitted without license from IHS Not for Resale, 08/26/2020 19:12:41 MDT

B.22 ~~Dielectric strength (COLD CONDITION)~~ LEAKAGE CURRENTS and PATIENT AUXILIARY CURRENTS and dielectric strength after humidity preconditioning at ambient temperature in the laboratory

See 8.4.2 and 8.7 and 8.8.3.

B.23 Defibrillation protection

See 8.5.5.

B.24 Expelled parts HAZARD

See 9.5.

B.25 Pressure vessels and parts subject to pneumatic and hydraulic pressure

See 9.7.

B.26 HAZARDS associated with support systems

See 9.8.

B.27 Mechanical strength

See 15.3 and 9.2.2.4.1.

B.28 HAZARDOUS SITUATIONS and fault conditions

See Clause 13.

B.29 MAINS SUPPLY TRANSFORMERS of ME EQUIPMENT and transformers providing separation in accordance with 8.5

See 15.5.

B.30 ME EQUIPMENT components and general assembly

See 15.4 and 8.10.

B.31 MAINS PARTS, components and layout

See 8.11.

B.32 Insulation other than wire insulation

See 8.8.4.

Copyright International Electrotechnical Commission
Provided by IHS Markit under license with IEC
No reproduction or networking permitted without license from IHS
Not for Resale, 08/26/2020 19:12:41 MDT

B.33 Fire prevention and constructional requirements for fire ENCLOSURES of ME EQUIPMENT

See 11.2 and 11.3.

B.34 Overflow, spillage, leakage, ingress of water, cleaning, disinfection, sterilization and compatibility with substances used with the ME EQUIPMENT

See 11.6.

B.35 CATEGORY AP and CATEGORY APG ME EQUIPMENT

See 11.4 and Annex G.

B.36 VERIFICATION of markings

See 7.2 to ~~7.8.2~~ 7.6 (inclusive), Annex C and 7.1.

Copyright International Electrotechnical Commission
Provided by IHS Markit under license with IEC
No reproduction or networking permitted without license from IHS
Not for Resale, 08/26/2020 19:12:41 MDT

Annex C
(informative)

Guide to marking and labelling requirements for ME EQUIPMENT and ME SYSTEMS

C.1 Marking on the outside of ME EQUIPMENT, ME SYSTEMS or their parts

The requirements for marking on the outside of ME EQUIPMENT and its parts are found in 7.2. Additional requirements for marking on the outside of ME EQUIPMENT, ME SYSTEMS and their parts are found in the subclauses listed in Table C.1. Symbols and ~~safety signs~~ SAFETY SIGNS used in marking on the outside of ME EQUIPMENT are found in Annex D.

Table C.1– Marking on the outside of ME EQUIPMENT, ME SYSTEMS or their parts [22)]

Description of marking	Subclause
CATEGORY APG ME EQUIPMENT: marking of	G.3.1
CATEGORY AP ME EQUIPMENT: marking of	G.3.2
CATEGORY AP and APG: marking of major parts	G.3.3
CATEGORY AP and APG ME EQUIPMENT: marking of parts	G.3.5
Depressurizing pressure system elements: warning about	9.7.2
Emergency stop device actuator: marking of	9.2.4
Hazardous voltage: warning of	8.11.1 i)
Mass of PATIENT, if designed for less than 135 kg: marking of	9.8.3.1
Moving parts: warning of	9.2.1
MULTIPLE SOCKET-OUTLET: marking of	16.9.2.1 b)
Overbalancing during transport: warning about	9.4.2.2
POTENTIAL EQUALIZATION CONDUCTOR terminal: marking of	8.6.7
Prohibition against pushing, leaning, resting: warning of	9.4.2.3 a)
Prohibition against sitting or stepping: warning of	9.4.2.3 b)
Reservoir or liquid storage chamber: marking of overflow HAZARD	11.6.2
MECHANICAL PROTECTIVE DEVICE intended to function only once: marking of	9.8.4.3
Separating transformer assembly: marking of	16.9.2.1 d)
Surfaces where application of force results in a RISK of overbalancing: marking of	9.4.2.3
Transport conditions: warning for	9.4.2.2

C.2 Marking on the inside of ME EQUIPMENT, ME SYSTEMS or their parts

The requirements for marking on the inside of ME EQUIPMENT and its parts are found in 7.3. Additional requirements for marking on the inside of ME EQUIPMENT, ME SYSTEMS and their parts are found in the subclauses listed in Table C.2. Symbols used in marking on the inside of ME EQUIPMENT are found in Annex D.

22) See 7.2.1 for the minimum requirements for marking on ME EQUIPMENT and on interchangeable parts.

Copyright International Electrotechnical Commission
Provided by IHS Markit under license with IEC
No reproduction or networking permitted without license from IHS
Not for Resale, 08/26/2020 19:12:41 MDT

Table C.2 – Marking on the inside of ME EQUIPMENT, ME SYSTEMS or their parts

Description of marking	Subclause
Hazardous energies: marking of capacitors or the connected circuit parts	8.4.4
Hazardous voltage: marking of parts	8.11.1 i)
MAINS TERMINAL DEVICES: marking of terminals other than terminal blocks	8.11.4.1
Marking of pressure vessels and pipes: national certification mark	9.7.5
Separating transformer assembly: marking of	16.9.2.1 d)

C.3 Marking of controls and instruments

The requirements for marking of controls and instruments are found in 7.4. Additional requirements for marking of controls and instruments are found in the subclauses listed in Table C.3.

Table C.3 – Marking of controls and instruments

Description of marking	Subclause
Controls: scale marking of	15.4.6.1 b)
Varying the temperature setting of THERMOSTATS: clear indication of	15.4.2.2 ~~a)~~

C.4 ACCOMPANYING DOCUMENTS, general

The requirements for general information to be included in the ACCOMPANYING DOCUMENTS are found in 7.9.1. Additional requirements for general information to be included in the ACCOMPANYING DOCUMENTS are found in the subclauses listed in Table C.4.

Table C.4 – ACCOMPANYING DOCUMENTS, general

Description of requirement	Clause
CATEGORY AP and CATEGORY APG ME EQUIPMENT and parts	G.3.4
CLASS II ME EQUIPMENT with isolated internal screens: explanation of	8.6.9
Defibrillation voltage, any necessary recovery time	8.5.5.1 b)
Fixing of structures to floor, wall, ceiling, etc.	9.8.1
Instability excluding transport: placement and loading of doors, drawers and shelves	9.4.2.2 e)
IT-NETWORK: instructions for connecting ME EQUIPMENT	14.13
Isolation device: requirements for	8.11.4.4
Lifting points: indication of	9.4.4 a)
Mass of PATIENT, if support systems designed for less than 135 kg	9.8.3.1
Mass of PATIENT, if support systems designed for more than 135 kg	9.8.3.1
MECHANICAL PROTECTIVE DEVICE intended to function only once: instruction to call SERVICE PERSONNEL	9.8.4.3
ME EQUIPMENT: placement of SAFE WORKING LOAD	9.4.2.4.3 ~~c)~~
ME SYSTEMS: addition requirements	16.2
Noise: protective means	9.6.2.1 b)
Passing over an obstruction: instructions for	9.4.2.4.3
~~SAFETY DEVICE intended to function only once: instruction to call SERVICE PERSONNEL~~	~~9.8.4.3~~
Working conditions	5.4 a)

Copyright International Electrotechnical Commission
Provided by IHS Markit under license with IEC
No reproduction or networking permitted without license from IHS
Not for Resale, 08/26/2020 19:12:41 MDT

C.5 ACCOMPANYING DOCUMENTS, Instructions for use

The requirements for information to be included in the instructions for use are found in 7.9.2. Additional requirements for information to be included in the instructions for use are found in the subclauses listed in Table C.5.

Table C.5 – ACCOMPANYING DOCUMENTS, instructions for use

Description of requirement	Subclause
ACCESSIBLE PARTS: instruction not to touch them and the PATIENT simultaneously	8.4.2 c)
ACCESSIBLE PARTS: instructions to the OPERATOR to open ACCCESS COVERS	8.4.2 c)
APPLIED PARTS (hot or cold): temperatures and clinical effects of	11.1.2.1
APPLIED PARTS not intended to deliver heat: temperature exceeding 41 °C	11.1.2.2
Cleaning or disinfection PROCESSES: specification of	11.6.6
Effect of multiple cleanings/disinfections	11.6.6
Foot-operated controls: intended for use in areas where liquids are likely to be found	15.4.7.3 b)
Mass of ACCESSORIES	9.8.3.~~2~~1
ME SYSTEMS: other equipment intended to provide power to ME EQUIPMENT	16.3
MOBILE ME EQUIPMENT: requirement that more than one person is needed to move	9.4.2.4.2 ~~a)~~
Moving parts: warning of	9.2.1
POTENTIAL EQUALIZATION CONDUCTOR terminal: information on the function and use of	8.6.7
Reservoir or liquid storage chamber: information on overflow HAZARD	11.6.2
Transport conditions: warning for	9.4.2.2

C.6 ACCOMPANYING DOCUMENTS, technical description

The requirements for information to be included in the technical description are found in 7.9.3. Additional requirements for information to be included in the technical description are found in the subclauses listed in Table C.6.

Table C.6 – ACCOMPANYING DOCUMENTS, technical description

Description of requirement	Clause
~~CLASS II ME EQUIPMENT with isolated internal screens: explanation of~~	~~8.6.9~~
External means of isolation: description of	8.11.1 b)
ME SYSTEM large transient currents: disclosure of	16.3
Non-automatic discharging device for internal capacitors: specification of	8.4.4
~~Network requirements for PEMS intended to be connected to an outside network~~	~~14.13~~

Copyright International Electrotechnical Commission
Provided by IHS Markit under license with IEC
No reproduction or networking permitted without license from IHS
Not for Resale, 08/26/2020 19:12:41 MDT

Annex D
(informative)

Symbols on marking
(see Clause 7)

Symbols are frequently used on ME EQUIPMENT in preference to words with the intention of obviating language differences and permitting easier comprehension of a marking or indication, sometimes in a restricted space. New and improved symbols and ~~safety signs~~ SAFETY SIGNS have been introduced since the publication of the second edition of IEC 60601-1 which necessitates changes in the list of approved symbols and ~~safety signs~~ SAFETY SIGNS for use on ME EQUIPMENT.

Chief among these changes is the revision of the usage of symbol 24 in Table D.1. This symbol was formally used to indicate a warning as well as an informative marking (e.g. this is where the HIGH VOLTAGE is connected). A new ~~safety sign~~ SAFETY SIGN (3) in Table D.2 has been added to indicate, “Warning: Dangerous Voltage.” In this edition of the standard, the ~~safety signs~~ SAFETY SIGNS of Table D.2 are required where a warning is intended while the symbols in Table D.1 are used when the intention is solely to inform.

Similarly is the revision of the usage of symbol 10 in Table D.1, which was formerly used to indicate “attention: consult ACCOMPANYING DOCUMENTS”. That symbol is now used to indicate caution. A new symbol (11) in Table D.1 has been added to indicate, “follow operating instructions”. Additionally, a new ~~safety sign~~ SAFETY SIGN (10) in Table D.2 has been added to mark ME EQUIPMENT where failure to follow operating instructions could place the PATIENT or OPERATOR at RISK.

Consistent use of these symbols and ~~safety signs~~ SAFETY SIGNS in all fields of use (e.g., medical, consumer products, and general transportation) will help ME EQUIPMENT OPERATORS to become familiar with their meaning. Conversely, any inconsistent use will lead to confusion and mistakes and jeopardize safety.

IEC 60878 [60] provides a useful compendium of graphical symbols and ~~safety sign~~ SAFETY SIGN used on electrical equipment in medical practice that were complied from relevant ISO and IEC standards. See also 7.5 and 7.6.

For symbol requirements not met by the symbols in IEC 60878, refer in the first instance to published IEC or ISO symbols, noting that, where necessary, two or more symbols can be grouped together to convey a particular meaning and that, provided the essential communicative characteristics of the basic symbol are maintained, some latitude in graphic design is permissible. The colours of symbols are not specified, except for the background of the AP and APG symbols (see Clause G.3). The colours of ~~safety signs~~ SAFETY SIGNS are specified in ISO 3864-1.

In the following tables, the symbol graphic and title are provided for information.

--`,,```,,,,````-`-`,,`,,`,`,,`---

Copyright International Electrotechnical Commission
Provided by IHS Markit under license with IEC
No reproduction or networking permitted without license from IHS
Not for Resale, 08/26/2020 19:12:41 MDT

Table D.1 – General symbols

No.	Symbol	Reference	Title
1	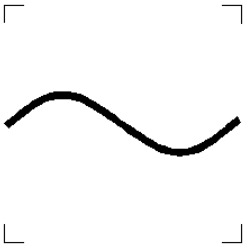	IEC 60417-5032	Alternating current
2		IEC 60417-5032-1	Three-phase alternating current
3		IEC 60417-5032-2	Three-phase alternating current with neutral conductor
4	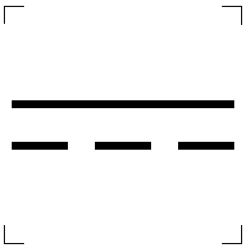	IEC 60417-5031	Direct current
5	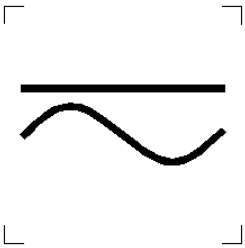	IEC 60417-5033	Both direct and alternating current
6	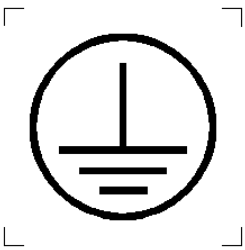	IEC 60417-5019	Protective earth (ground)

Copyright International Electrotechnical Commission
Provided by IHS Markit under license with IEC
No reproduction or networking permitted without license from IHS
Not for Resale, 08/26/2020 19:12:41 MDT

Table D.1 *(continued)*

No.	Symbol	Reference	Title
7	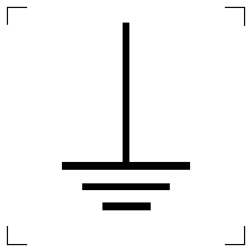	IEC 60417-5017	Earth (ground)
8	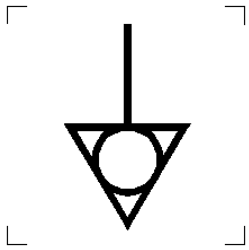	IEC 60417-5021	Equipotentiality
9	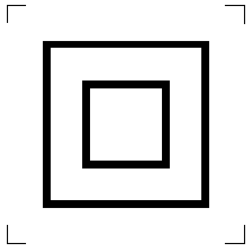	IEC 60417-5172	CLASS II equipment
10		ISO 7000-0434A	Caution In case of application as a ~~safety sign~~ SAFETY SIGN, the rules according to ISO 3864-1 are to be adhered to. See ~~safety sign~~ SAFETY SIGN ISO 7010-W001 (Table D.2, ~~safety sign~~ SAFETY SIGN 2).
11	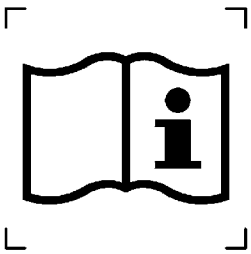	ISO 7000-1641	Operating instructions
12	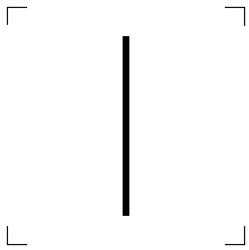	IEC 60417-5007	“ON” (power)

Copyright International Electrotechnical Commission
Provided by IHS Markit under license with IEC
No reproduction or networking permitted without license from IHS
Not for Resale, 08/26/2020 19:12:41 MDT

Table D.1 *(continued)*

No.	Symbol	Reference	Title
13	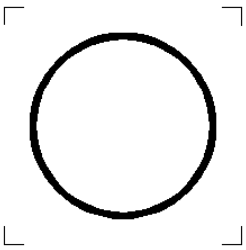	IEC 60417-5008	“OFF” (power)
14	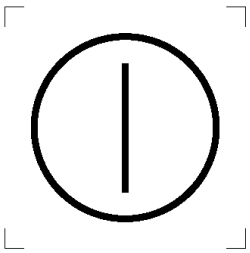	IEC 60417-5010	“ON” / “OFF” (push-push) NOTE Each position, "ON" or "OFF", is a stable position.
15	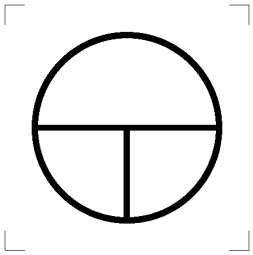	IEC 60417-5011	“ON” / “OFF” (push button) NOTE "OFF" is a stable position, whilst the "ON" position only remains during the time the button is depressed.
16	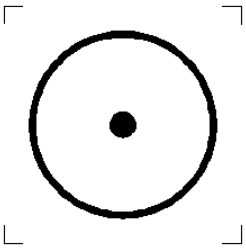	IEC 60417-5264	“ON” for part of equipment
17	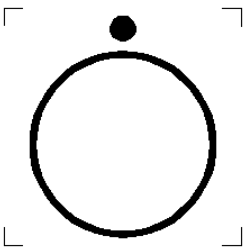	IEC 60417-5265	“OFF” for part of the equipment
18	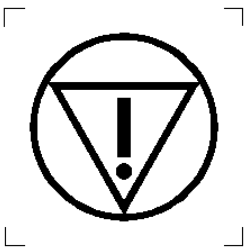	IEC 60417-5638	Emergency stop

Copyright International Electrotechnical Commission
Provided by IHS Markit under license with IEC
No reproduction or networking permitted without license from IHS
Not for Resale, 08/26/2020 19:12:41 MDT

Table D.1 *(continued)*

No.	Symbol	Reference	Title
19	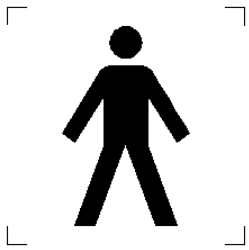	IEC 60417-5840	TYPE B APPLIED PART NOTE Subclause 7.2.10 requires that, for clear differentiation with symbol 20, symbol 19 is not to be applied in such a way as to give the impression of being inscribed within a square.
20	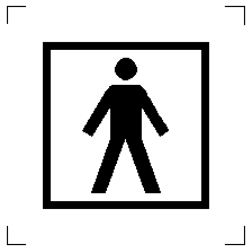	IEC 60417-5333	TYPE BF APPLIED PART
21	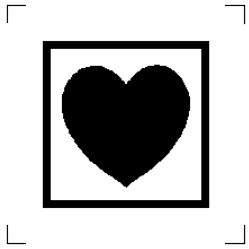	IEC 60417-5335	TYPE CF APPLIED PART
22		IEC 60417-5331	CATEGORY AP equipment
23	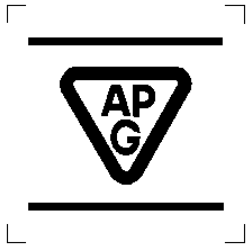	IEC 60417-5332	CATEGORY APG equipment
24	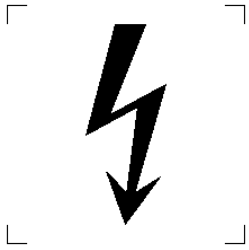	IEC 60417-5036	Dangerous voltage

Copyright International Electrotechnical Commission
Provided by IHS Markit under license with IEC
No reproduction or networking permitted without license from IHS
Not for Resale, 08/26/2020 19:12:41 MDT

Table D.1 *(continued)*

No.	Symbol	Reference	Title
25	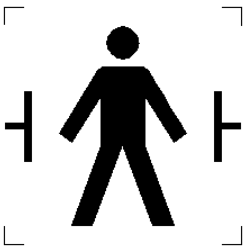	IEC 60417-5841	DEFIBRILLATION-PROOF TYPE B APPLIED PART
26	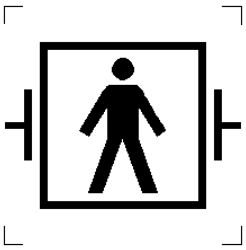	IEC 60417-5334	DEFIBRILLATION-PROOF TYPE BF APPLIED PART
27	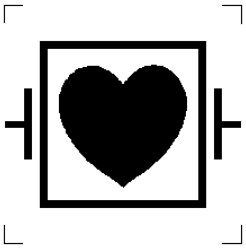	IEC 60417-5336	DEFIBRILLATION-PROOF TYPE CF APPLIED PART
28	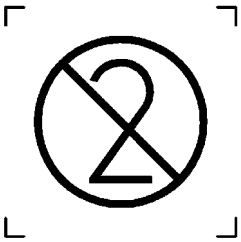	ISO 7000-1051	Do not reuse
29	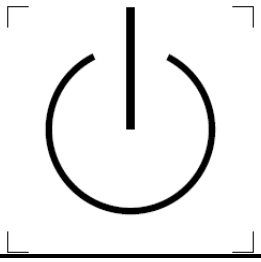	IEC 60417-5009	Stand-by

Copyright International Electrotechnical Commission
Provided by IHS Markit under license with IEC
No reproduction or networking permitted without license from IHS
Not for Resale, 08/26/2020 19:12:41 MDT

Table D.2 – ~~Safety signs~~ SAFETY SIGNS

No.	~~Safety sign~~ SAFETY SIGN	Reference	Title
1		ISO 3864-1, Figure 3	Template for constructing a warning sign NOTE Background colour: yellow Triangular band: Black Symbol or text: Black
2		ISO 7010-W001	General warning sign
3	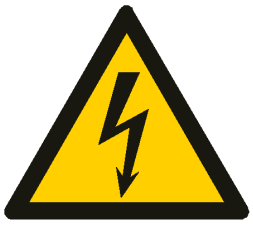	~~IEC 60878~~ ~~ISO 3864-B.3.6~~ [a] ISO 7010-W012	~~Warning: dangerous voltage~~ Warning, electricity
4		ISO 7010-P001 and ISO 3864-1, Figure 1	General prohibition sign and Template for constructing a prohibition sign NOTE Background colour: white Circular band and slash: red Symbol or text: black
5		ISO 7010-P017	No pushing
6		ISO 7010-P018	No sitting

Copyright International Electrotechnical Commission
Provided by IHS Markit under license with IEC
No reproduction or networking permitted without license from IHS
Not for Resale, 08/26/2020 19:12:41 MDT

Table D.2 *(continued)*

No.	Safety sign	Reference	Title
7		ISO 7010-P019	No stepping on surface
8	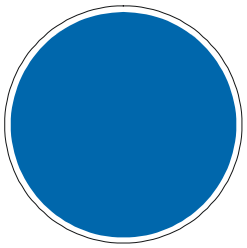	ISO 3864-1 Figure 2	Template for constructing a mandatory action sign NOTE Background colour: blue Symbol or text: white
9		ISO 7010-M001	General mandatory action sign
10		ISO 7010-M002	Refer to instruction manual/ booklet NOTE On ME EQUIPMENT "Follow instructions for use"

[a] The description of this commonly used safety sign appeared in Annex B of ISO 3864:1984. When the safety signs were collected in ISO 7010, this sign was not migrated to the new standard. ISO 3864:1984 was superseded by ISO 3864-1 and ISO 7010 in January 2003. It is expected that this safety sign will be added to ISO 7010 in an upcoming amendment.

Copyright International Electrotechnical Commission
Provided by IHS Markit under license with IEC
No reproduction or networking permitted without license from IHS
Not for Resale, 08/26/2020 19:12:41 MDT

Table D.3 – General codes

1	**N**	IEC 60445	Connection point for the neutral conductor on PERMANENTLY INSTALLED equipment
2	**IPN_1N_2**	IEC 60529	N_1 = 0 Non-protected 1 Protected against solid foreign objects of 50 mm ∅ and greater 2 Protected against solid foreign objects of 12,5 mm ∅ and greater 3 Protected against solid foreign objects of 2,5 mm ∅ and greater 4 Protected against solid foreign objects of 1,0 mm ∅ and greater 5 Dust-protected 6 Dust-tight N_2 = 0 Non-protected 1 Protection against vertically falling water drops 2 Protection against vertically falling water drops when ENCLOSURE tilted up to 15° 3 Protected against spraying water 4 Protected against splashing water 5 Protected against water jets 6 Protected against powerful water jets 7 Protected against the effects of temporary immersion in water 8 Protected against the effects of continuous immersion in water NOTE When a characteristic numeral is not required to be specified, it is replaced by the letter “X” (“XX” if both numerals are omitted).

--`,,```,,,,````-`-`,,`,,`,`,,`---

Copyright International Electrotechnical Commission
Provided by IHS Markit under license with IEC
No reproduction or networking permitted without license from IHS
Not for Resale, 08/26/2020 19:12:41 MDT

Annex E
(informative)

Examples of the connection of the measuring device (MD) for measurement of the PATIENT LEAKAGE CURRENT and PATIENT AUXILIARY CURRENT
(see 8.7)

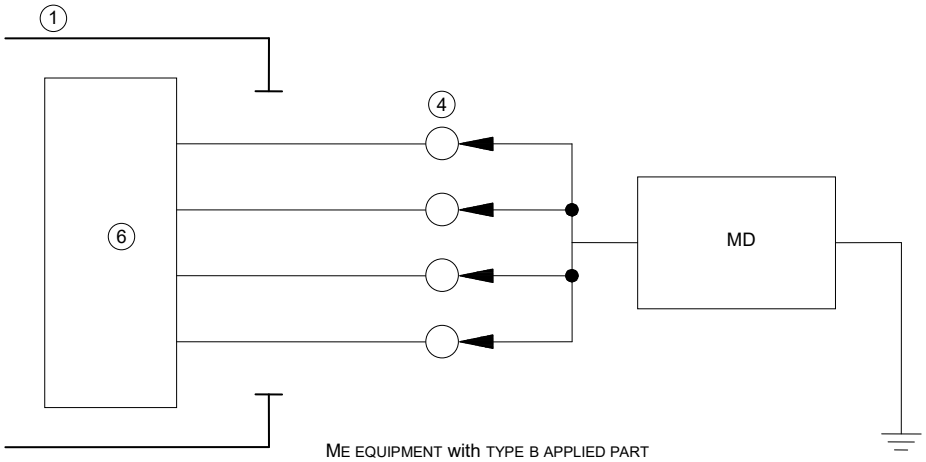

ME EQUIPMENT with TYPE B APPLIED PART
From all PATIENT CONNECTIONS connected together.
For legends, see Table 5

IEC 2442/05

Figure E.1 – TYPE B APPLIED PART

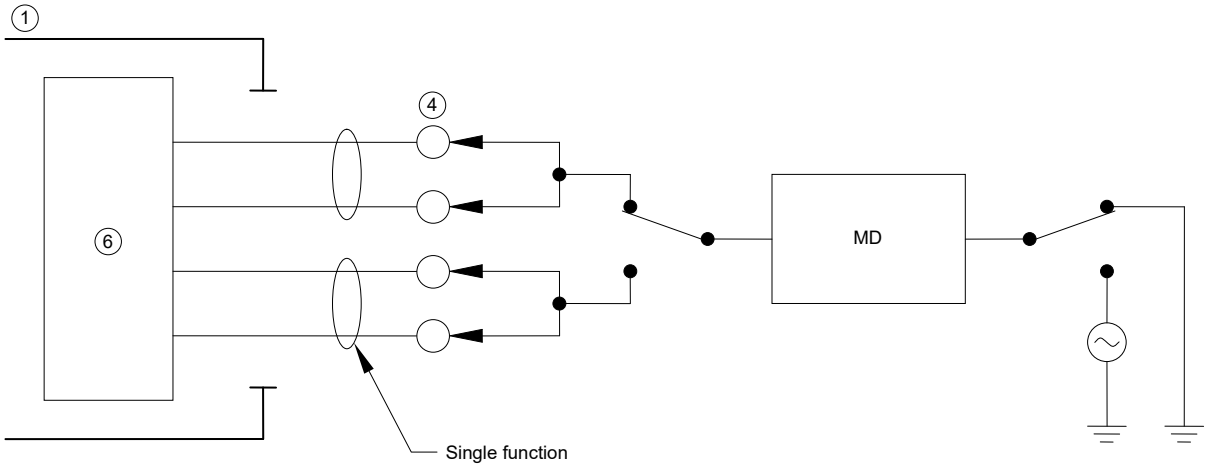

ME EQUIPMENT with TYPE BF APPLIED PART
From and to all PATIENT CONNECTIONS of a single function connected together.
For legends, see Table 5

IEC 2443/05

Figure E.2 – TYPE BF APPLIED PART

--`,,`,,`-`-`,,`,,`,`,,`---
Copyright International Electrotechnical Commission
Provided by IHS Markit under license with IEC
No reproduction or networking permitted without license from IHS
Not for Resale, 08/26/2020 19:12:41 MDT

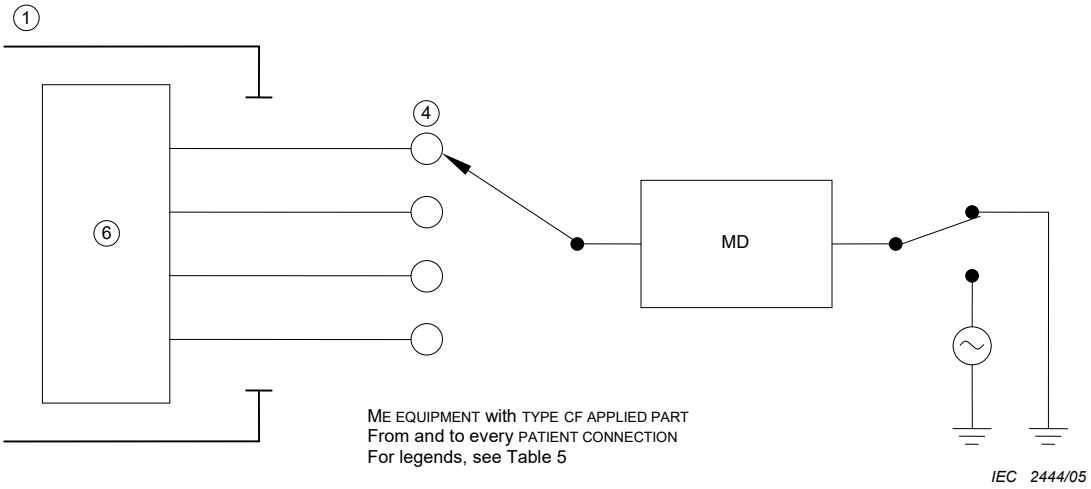

Figure E.3 – TYPE CF APPLIED PART

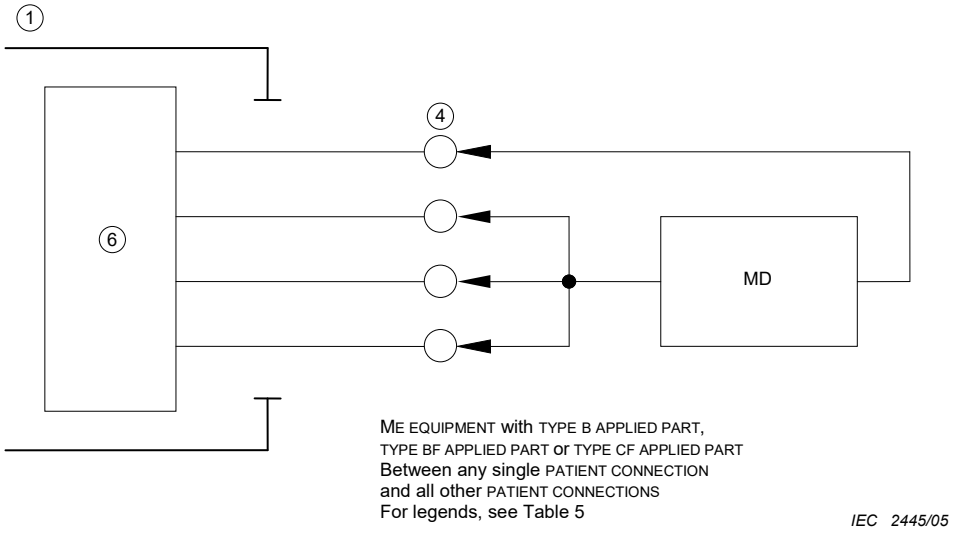

Figure E.4 – PATIENT AUXILIARY CURRENT

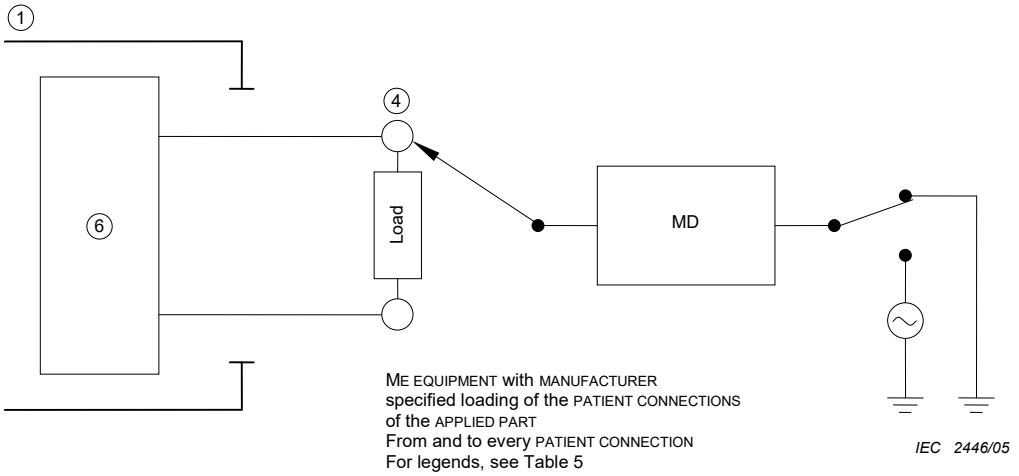

Figure E.5 – Loading of the PATIENT CONNECTIONS if specified by the MANUFACTURER

Copyright International Electrotechnical Commission
Provided by IHS Markit under license with IEC
No reproduction or networking permitted without license from IHS
Not for Resale, 08/26/2020 19:12:41 MDT

Annex F
(informative)

Suitable measuring supply circuits

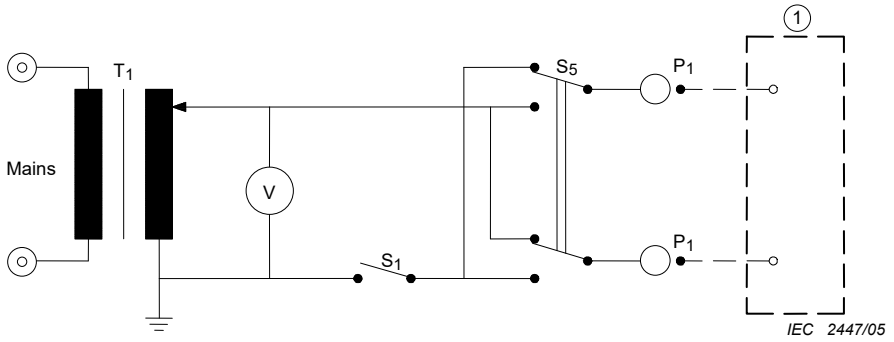

For legends, see Table 5.

Figure F.1 – Measuring supply circuit with one side of the SUPPLY MAINS at approximately earth potential
(see 8.7.4.2)

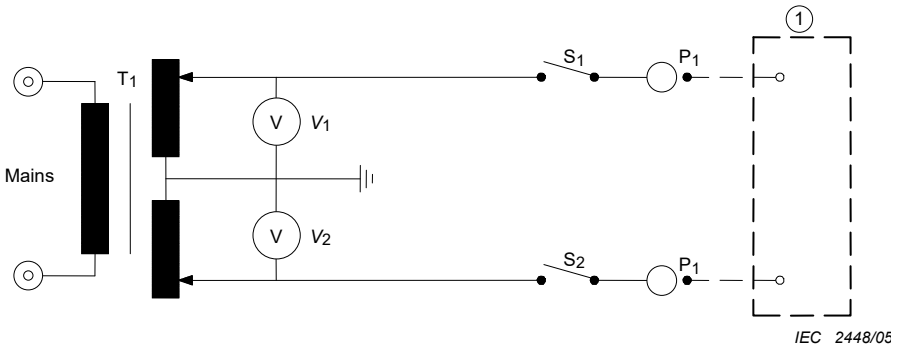

For legends, see Table 5.

Figure F.2 – Measuring supply circuit with SUPPLY MAINS approximately symmetrical to earth potential
(see 8.7.4.2)

--`,,```,,,,````-`-`,,`,,`,`,,`---
Copyright International Electrotechnical Commission
Provided by IHS Markit under license with IEC
No reproduction or networking permitted without license from IHS
Not for Resale, 08/26/2020 19:12:41 MDT

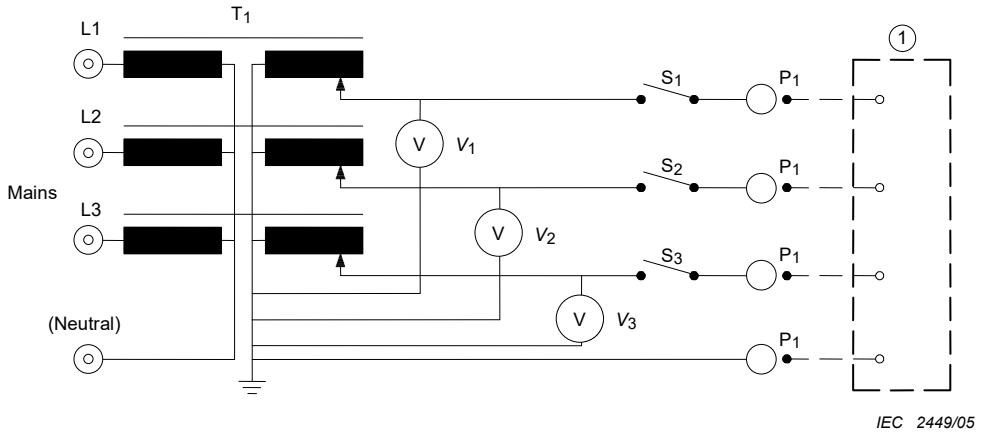

For legends, see Table 5.

Figure F.3 – Measuring supply circuit for polyphase ME EQUIPMENT specified for connection to a polyphase SUPPLY MAINS
(see 8.7.4.2)

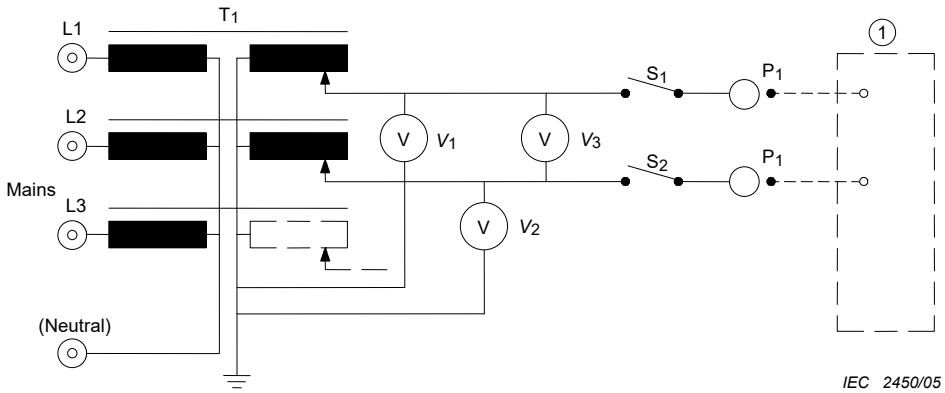

For legends, see Table 5.

Figure F.4 – Measuring supply circuit for single-phase ME EQUIPMENT specified for connection to a polyphase SUPPLY MAINS
(see 8.7.4.2)

Copyright International Electrotechnical Commission
Provided by IHS Markit under license with IEC
No reproduction or networking permitted without license from IHS
Not for Resale, 08/26/2020 19:12:41 MDT

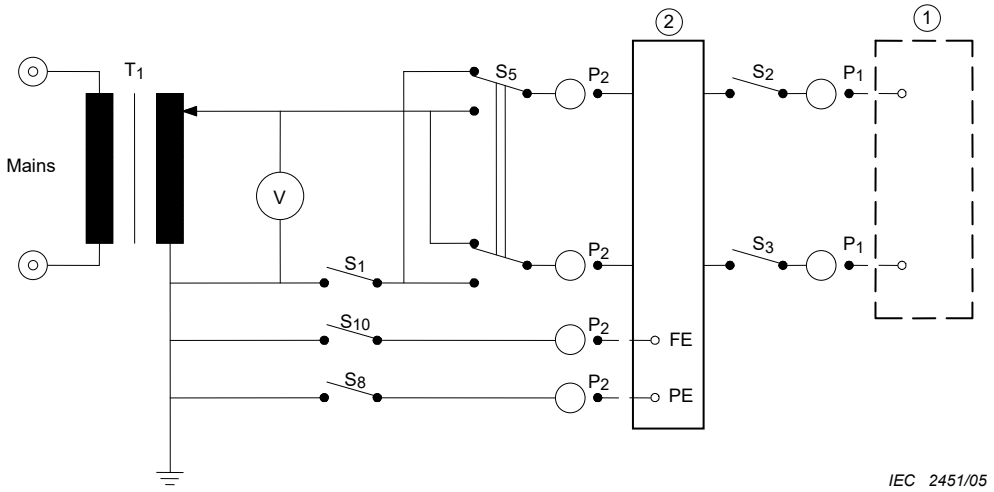

For legends, see Table 5.

Figure F.5 – Measuring supply circuit for ME EQUIPMENT having a separate power supply unit or intended to receive its power from another equipment in an ME SYSTEM
(see 8.7.4.2)

Copyright International Electrotechnical Commission
Provided by IHS Markit under license with IEC
No reproduction or networking permitted without license from IHS
Not for Resale, 08/26/2020 19:12:41 MDT

Annex G
(normative)

Protection against HAZARDS of ignition of flammable anaesthetic mixtures

NOTE This annex replaces the former Section Six: "Protection against HAZARDS of ignition of flammable anaesthetic mixtures" of the second edition.

G.1 Introduction

G.1.1 Applicability

Where ME EQUIPMENT is used in areas in which flammable anaesthetics or flammable agents for disinfection or skin cleaning are applied, an explosion RISK can exist if such anaesthetics or agents are mixed with air, or with oxygen or nitrous oxide.

Ignition of such a mixture can be caused by sparks or by contact with parts having a high surface temperature.

Sparks can be caused where electrical circuits are opened or closed by operation of switches, connectors, fuses or OVER-CURRENT RELEASES and the like.

In HIGH VOLTAGE parts, sparks can be caused by corona. Static discharges can cause sparks.

The probability of occurrence of the ignition of such anaesthetic mixtures depends on their concentration, the appropriate minimum ignition energy, the presence of high surface temperatures and the energy of sparking.

G.1.2 Industrial equipment and components

The constructional requirements of IEC 60079-0 are generally not appropriate for ME EQUIPMENT for several reasons:

a) they lead to constructions of a size, weight or design that are not applicable for medical reasons or that cannot be sterilizable;

b) some constructions allow an explosion inside an ENCLOSURE, but prevent propagation outside it. Such a construction, which might be inherently safe, would be unacceptable in an operating theatre where continuity of operation of ME EQUIPMENT is essential;

c) industrial requirements were made for flammable agents mixed with air. They cannot be applied to mixtures with oxygen or nitrous oxide used in medical practice;

d) in medical practice flammable anaesthetic mixtures occur only in relatively small quantities.

However some of the constructions described in IEC 60079-0 are acceptable for CATEGORY AP ME EQUIPMENT (see G.5.1).

G.1.3 * Requirements for ME EQUIPMENT

In this annex, the location of flammable anaesthetic mixtures is described:

– as much as necessary for the construction of ME EQUIPMENT, as minimum for specified conditions of exhaust and absorption;

– as much as necessary for the allocation of ME EQUIPMENT and the construction of the electrical installation in the IEC 60364 series.

Copyright International Electrotechnical Commission
Provided by IHS Markit under license with IEC
No reproduction or networking permitted without license from IHS
Not for Resale, 08/26/2020 19:12:41 MDT

The recommendations, limits and tests of this annex are based on the results of statistical considerations obtained from experiments with the most readily flammable mixtures of ether vapour with air and with oxygen, using the test apparatus described in Clause G.7. This is justified because combinations with ether have the lowest ignition temperatures and the lowest ignition energies of commonly used agents.

Where temperatures or circuit parameters of ME EQUIPMENT used in a FLAMMABLE ANAESTHETIC MIXTURE WITH AIR exceed allowable limits and sparking cannot be avoided the relevant parts and circuits can be enclosed in ENCLOSURES with pressurized inert gas or clean air or in ENCLOSURES with restricted breathing.

ENCLOSURES with restricted breathing delay the build-up of an ignitable concentration. They are recognized because it is assumed that a period in which ME EQUIPMENT is used in a FLAMMABLE ANAESTHETIC MIXTURE WITH AIR is followed by a period of ventilation during which such a concentration will disappear.

For ME EQUIPMENT containing or used in a FLAMMABLE ANAESTHETIC MIXTURE WITH OXYGEN OR NITROUS OXIDE, requirements, limits and tests are far more stringent.

These recommendations apply not only to NORMAL CONDITION but, additionally, in the SINGLE FAULT CONDITION, as indicated in 4.7. Only two exemptions from an actual ignition test are recognized, these being either the absence of sparks and limited temperature or limited temperature and restricted circuit parameters.

G.2 Locations and basic requirements

G.2.1 Parts of CATEGORY APG ME EQUIPMENT

Parts of CATEGORY APG ME EQUIPMENT in which a FLAMMABLE ANAESTHETIC MIXTURE WITH AIR occurs shall be CATEGORY AP or APG ME EQUIPMENT and shall comply with the requirements of Clause G.3, G.4 and G.5.

G.2.2 FLAMMABLE ANAESTHETIC MIXTURE WITH AIR

Where a FLAMMABLE ANAESTHETIC MIXTURE WITH AIR occurs because of a leakage or discharge of a FLAMMABLE ANAESTHETIC MIXTURE WITH OXYGEN OR NITROUS OXIDE from an ENCLOSURE, it is considered to propagate to a volume surrounding the leakage or discharge point at a distance from 5 cm to 25 cm from such a point.

G.2.3 FLAMMABLE ANAESTHETIC MIXTURE WITH OXYGEN OR NITROUS OXIDE

A FLAMMABLE ANAESTHETIC MIXTURE WITH OXYGEN OR NITROUS OXIDE may be contained in a completely or partly enclosed ME EQUIPMENT part and in the PATIENT'S respiratory tract. Such a mixture is considered to propagate to a distance of 5 cm from an ENCLOSURE part where leakage or discharge occurs.

G.2.4 ME EQUIPMENT specified for use with FLAMMABLE ANAESTHETIC MIXTURE WITH AIR

ME EQUIPMENT or parts thereof specified for use with FLAMMABLE ANAESTHETIC MIXTURE WITH AIR (in a location defined in G.2.2) shall be CATEGORY AP or APG ME EQUIPMENT and shall comply with the requirements of Clause G.4 and G.5.

--`,,```,,,,````-`-`,,`,,`,`,,`---

Copyright International Electrotechnical Commission
Provided by IHS Markit under license with IEC
No reproduction or networking permitted without license from IHS Not for Resale, 08/26/2020 19:12:41 MDT

G.2.5 ME EQUIPMENT specified for use with FLAMMABLE ANAESTHETIC MIXTURE WITH OXYGEN OR NITROUS OXIDE

ME EQUIPMENT or parts thereof specified for use with FLAMMABLE ANAESTHETIC MIXTURE WITH OXYGEN OR NITROUS OXIDE (in a location defined in G.2.2) shall be CATEGORY APG ME EQUIPMENT and shall comply with the requirements of G.4 and G.6.

Compliance with the requirements of ~~G.2.3 through~~ G.2.4 and G.2.5 ~~(inclusive)~~ is checked by inspection and by the appropriate tests of Clause G.3, G.4 ~~and~~, G.5 and G.6.

These tests shall be performed after applicable tests according to 11.6.6 and 11.6.7.

G.3 Marking, ACCOMPANYING DOCUMENTS

G.3.1 CATEGORY APG marking

CATEGORY APG ME EQUIPMENT shall be marked on a prominent location with a green-coloured band at least 2 cm wide imprinted with the characters “APG” (see symbol IEC 60417-5332 (~~DB:~~2002-10) (Table D.1, symbol 23)). The length of the green-coloured band should be at least 4 cm. The size of the marking should be as large as possible for the particular case. If this marking is impossible, the relevant information shall be given in the instructions for use.

Compliance is checked by inspection and by application of the tests and criteria in 7.1.2 and 7.1.3.

G.3.2 CATEGORY AP marking

CATEGORY AP ME EQUIPMENT shall be marked on a prominent location with a green-coloured circle of at least 2 cm diameter, imprinted with the characters “AP” (see symbol IEC 60417-5331 (~~DB:~~2002-10) (Table D.1, symbol 22)).

The size of the marking should be as large as possible for the particular case. If this marking is impossible, the relevant information shall be given in the instructions for use.

Compliance is checked by inspection and by application of the tests and criteria in 7.1.2 and 7.1.3.

G.3.3 Placement of markings

The marking according to G.3.1 and G.3.2 ~~and G.3.3~~ shall be present on the major part of the ME EQUIPMENT if this part is CATEGORY AP or CATEGORY APG. It need not be repeated on detachable parts that can only be used together with the marked ME EQUIPMENT.

Compliance is checked by inspection.

G.3.4 ACCOMPANYING DOCUMENTS

ACCOMPANYING DOCUMENTS shall contain an indication to enable the RESPONSIBLE ORGANIZATION to distinguish the parts of ME EQUIPMENT (see G.3.5) that are CATEGORY AP and CATEGORY APG.

Compliance is checked by inspection.

G.3.5 Marking when parts of ME EQUIPMENT are CATEGORY AP or CATEGORY APG

On ME EQUIPMENT in which only certain ME EQUIPMENT parts are CATEGORY AP or CATEGORY APG, the marking shall clearly indicate which parts are CATEGORY AP or CATEGORY APG.

Compliance is checked by inspection.

Copyright International Electrotechnical Commission
Provided by IHS Markit under license with IEC
No reproduction or networking permitted without license from IHS
Not for Resale, 08/26/2020 19:12:41 MDT

G.4 Common requirements for CATEGORY AP and CATEGORY APG ME EQUIPMENT

G.4.1 Electrical connections

a) CREEPAGE DISTANCES and AIR CLEARANCES between the connection points of POWER SUPPLY CORD shall be according to THE Table 12 values for one MEANS OF PATIENT PROTECTION.

b) Connections, except those in the circuits described in G.5.3 and G.6.3, shall be protected against accidental disconnection in NORMAL USE or shall be so designed that connection or disconnection can be performed only with the use of a TOOL.

c) CATEGORY AP and CATEGORY APG ME EQUIPMENT shall not be provided with a DETACHABLE POWER SUPPLY CORD unless the circuit complies with the requirements of G.5.3 and G.6.3.

Compliance is checked by inspection or measurement.

G.4.2 Construction details

a) Opening of an ENCLOSURE providing protection against the penetration of gases or vapours into the ME EQUIPMENT or into parts thereof shall be possible only with the aid of a TOOL.

Compliance is checked by inspection.

b) To minimize arcing and sparking due to foreign objects penetrating the ENCLOSURE:

- top covers of ENCLOSURES shall have no openings; openings for controls are permitted if these openings are covered by the control knob;
- openings in side-covers shall have such dimensions that penetration by a solid cylindrical object of more than 4 mm diameter is prevented;
- openings in base plates shall have such dimensions that penetration by a solid cylindrical object of more than 12 mm diameter is prevented.

Compliance is checked by means of a cylindrical test rod of 4 mm diameter for side-covers and 12 mm diameter for base plates. The test rod is not to enter the ENCLOSURE when applied in all possible directions without appreciable force.

c) Where insulation of electrical conductors equal to one MEANS OF PATIENT PROTECTION may contact a part containing a FLAMMABLE ANAESTHETIC MIXTURE WITH OXYGEN OR NITROUS OXIDE or ignitable gases alone or oxygen, a short circuit of these conductors or a short circuit of one conductor to a conductive part containing the gas or mixture shall not result in loss of integrity of such a part or result in an inadmissible temperature ~~or in a HAZARD~~ in such a part (see G.6.3 a)) or in any HAZARDOUS SITUATION.

Compliance is checked by inspection. In case of doubt, a short-circuit test (without explosive gases) should be performed and the temperature in the relevant part should be measured if possible. The short-circuit test need not be performed if the product of the open-circuit voltage in volts and the short-circuit current in amperes does not exceed 10.

G.4.3 Prevention of electrostatic charges

a) Electrostatic charges shall be prevented on CATEGORY AP and CATEGORY APG ME EQUIPMENT by a combination of appropriate measures such as:

- the use of antistatic materials with a limited electrical resistance as specified in G.4.3 b), and

Copyright International Electrotechnical Commission
Provided by IHS Markit under license with IEC
No reproduction or networking permitted without license from IHS Not for Resale, 08/26/2020 19:12:41 MDT

– provision of electrically conductive paths from ME EQUIPMENT or its parts to a conductive floor or to the protective earth system or the potential equalization system or via wheels to an antistatic floor of the medically used room.

b) The electrical resistance limits of anaesthetic tubing, mattresses and pads, castor tyres and other antistatic material shall comply with ISO 2882.

Compliance with the allowable resistance limits given in ISO 2882 is checked by measurements according to ISO 1853, ISO 2878 and ISO 23529.

G.4.4 Corona

Parts and components of ME EQUIPMENT operating at more than 2 000 V a.c. or more than 2 400 V d.c. that are not included in ENCLOSURES in compliance with G.5.4 or G.5.5 shall be so designed that corona cannot be produced.

Compliance is checked by inspection and measurement.

G.5 Requirements and tests for CATEGORY AP ME EQUIPMENT, parts and components thereof

G.5.1 General

ME EQUIPMENT, its parts or components shall not ignite FLAMMABLE ANAESTHETIC MIXTURES WITH AIR in NORMAL USE and NORMAL CONDITION.

ME EQUIPMENT, its parts or components complying with one of Subclauses G.5.2 to G.5.5 (inclusive) are considered to comply with the requirement of this subclause.

ME EQUIPMENT, its parts or components complying with the requirements of IEC 60079-0 for pressurized ENCLOSURES (IEC 60079-2), for sand-filled ENCLOSURES (IEC 60079-5) or for oil-immersed equipment (IEC 60079-6) as well as with the requirements of this standard (excluding those of G.5.2 to G.5.5), are considered to comply with the requirements for CATEGORY AP ME EQUIPMENT.

G.5.2 Temperature limits

ME EQUIPMENT, its parts or components not producing sparks and not producing operating temperatures of surfaces, in contact with gas mixtures in NORMAL USE and NORMAL CONDITION, exceeding 150 °C in case of restricted vertical air circulation by convection, or exceeding 200 °C in case of unrestricted vertical air circulation, if measured at an ambient temperature of 25 °C, are considered to comply with the requirements of G.5.1.

The operating temperatures are measured during the tests mentioned in 11.1.

G.5.3 * Low-energy circuits

ME EQUIPMENT, its parts or components that may produce sparks in NORMAL USE and NORMAL CONDITION of the ME EQUIPMENT (for example, switches, relays, plug connections that can be detached without the use of a TOOL, including connections inside ME EQUIPMENT that are not sufficiently locked or secured, and brush motors) shall comply with the temperature requirements of G.5.2 and additionally the voltage U_{max} and the current I_{max}, which can occur in their circuits, taking into account the capacitance C_{max} and the inductance L_{max} shall comply with the following:

$U_{max} \leq U_{zR}$ with a given current I_{zR}, see Figure G.1,

$U_{max} \leq U_c$ with a given capacitance C_{max}, see Figure G.2,

$I_{max} \leq I_{zR}$ with a given voltage U_{zR}, see Figure G.1, and

--`,```,,,,,,,,,,```-`-`,,`,,`,`,,`---

Copyright International Electrotechnical Commission
Provided by IHS Markit under license with IEC
No reproduction or networking permitted without license from IHS
Not for Resale, 08/26/2020 19:12:41 MDT

$I_{max} \leq I_{zL}$ with a given inductance L_{max} and a $U_{max} \leq 24$ V, see Figure G.3.

– The graphs of Figure G.1, Figure G.2 and Figure G.3 have been obtained with the test apparatus according to ~~G.6~~ Figure G.7 with the most readily flammable mixtures of ether vapour with air (ether volume percentage 4,3 ± 0,2 %) for an ignition probability (without safety factor) of 10^{-3}.

– Extrapolation of the graph of Figure G.1 is allowed for combinations of currents and corresponding voltages within the limitations $I_{zR} \cdot U_{zR} \leq 50$ W.

Extrapolation for voltages of more than 42 V is not valid.

– Extrapolation of the graph of Figure G.2 is allowed for combinations of capacitances and corresponding voltages within the limitations:

$$\frac{C}{2} U^2 \leq 1{,}2 \text{ mJ}$$

Extrapolation for voltages of more than 242 V is not valid.

If the equivalent resistance R is less than 8 000 Ω, U_{max} is additionally determined with the actual resistance R.

– Extrapolation of the graph of Figure G.3 is allowed for combinations of currents and corresponding inductances within the limitations

$$\frac{L}{2} I^2 \leq 0{,}3 \text{ mJ}$$

Extrapolation for inductances larger than 900 mH is not valid.

– Voltage U_{max} is taken as the highest supply voltage occurring in the circuit under investigation with the sparking contact open, taking into account the MAINS VOLTAGE variations required in 4.10.

– Current I_{max} is taken as the highest current flowing in the circuit under investigation with the sparking contact closed, taking into account the MAINS VOLTAGE variations required in 4.10.

– Capacitance C_{max} and inductance L_{max}, are taken as the values that occur at the component under investigation that produces sparks in the ME EQUIPMENT.

– If the circuit is supplied with a.c., the peak value is taken into account.

– If the circuit is complicated and consists of more than one capacitance, inductance and resistance, or a combination thereof, an equivalent circuit is calculated to determine the equivalent maximum capacitance, the equivalent maximum inductance and additionally the equivalent U_{max} and I_{max}, either as d.c. values or as a.c. peak values.

Compliance is checked either by temperature measurement and determination of U_{max}, I_{max}, R, L_{max} and C_{max} and application of Figure G.1, Figure G.2 and Figure G.3, or by examination of the design data.

Copyright International Electrotechnical Commission
Provided by IHS Markit under license with IEC
No reproduction or networking permitted without license from IHS
Not for Resale, 08/26/2020 19:12:41 MDT

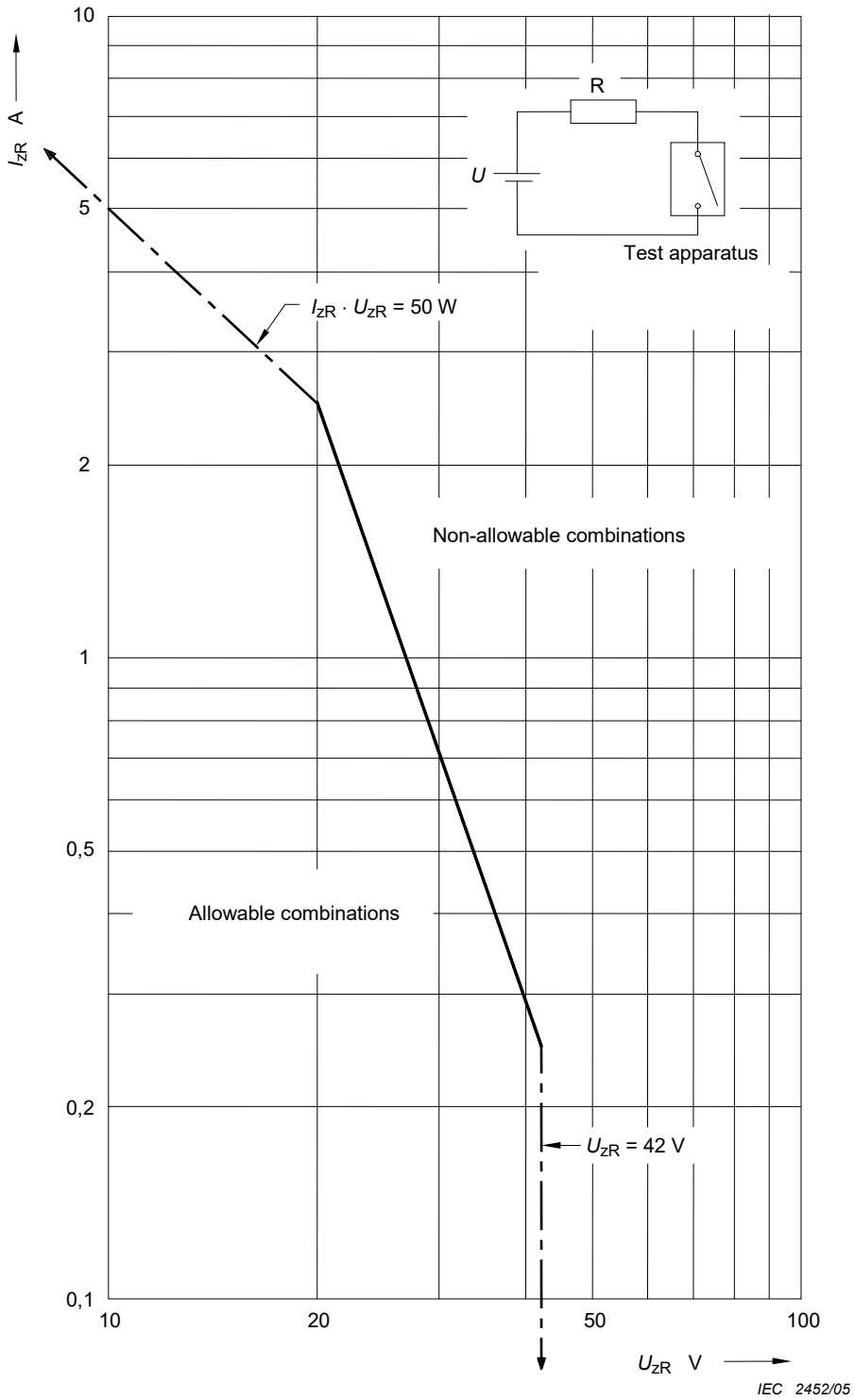

Figure G.1– Maximum allowable current I_{zR} as a function of the maximum allowable voltage U_{zR} measured in a purely resistive circuit with the most flammable mixture of ether vapour with air

Copyright International Electrotechnical Commission
Provided by IHS Markit under license with IEC
No reproduction or networking permitted without license from IHS
Not for Resale, 08/26/2020 19:12:41 MDT

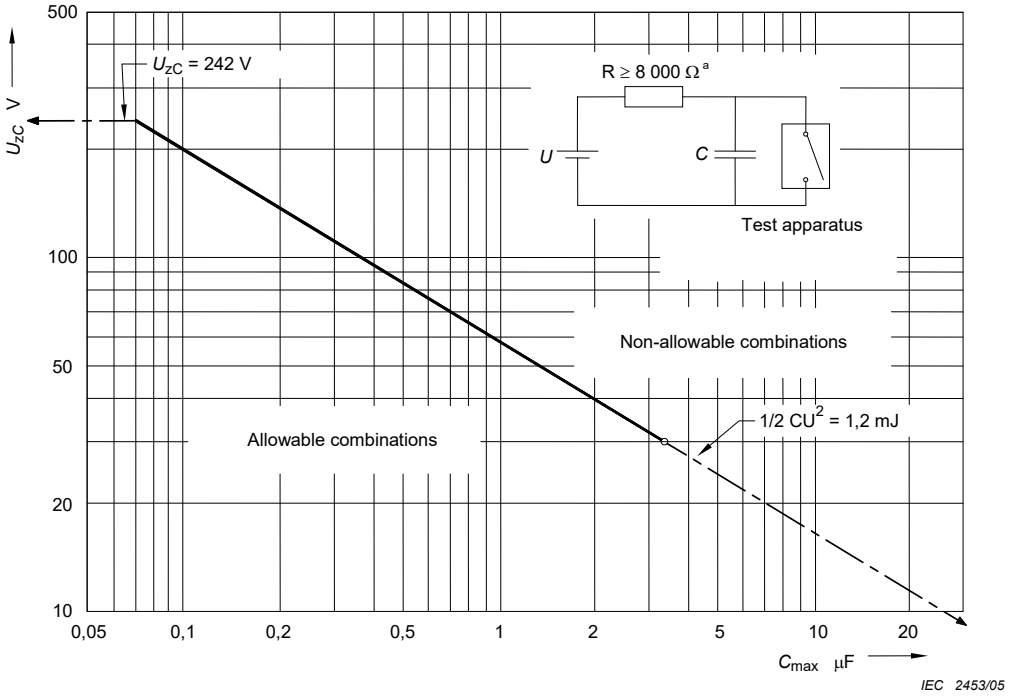

[a] 8 000 Ω or the actual resistance, if *R* is less than 8 000 Ω

Figure G.2 – Maximum allowable voltage U_{zC} as a function of the capacitance C_{max} measured in a capacitive circuit with the most flammable mixture of ether vapour with air

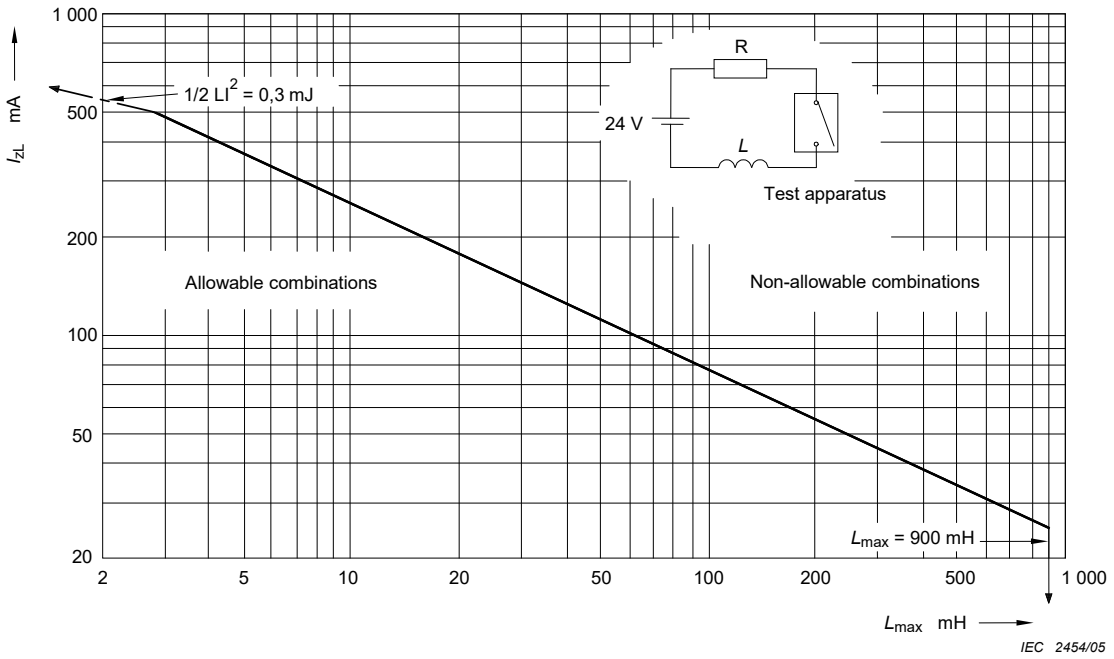

Figure G.3 – Maximum allowable current I_{zL} as a function of the inductance L_{max} measured in an inductive circuit with the most flammable mixture of ether vapour with air

Copyright International Electrotechnical Commission
Provided by IHS Markit under license with IEC
No reproduction or networking permitted without license from IHS
Not for Resale, 08/26/2020 19:12:41 MDT

G.5.4 * External ventilation with internal overpressure

Where ME EQUIPMENT, its parts or components are enclosed in an ENCLOSURE with external ventilation by means of internal overpressure the following requirements shall apply.

a) FLAMMABLE ANAESTHETIC MIXTURES WITH AIR that might have penetrated into the ENCLOSURE of ME EQUIPMENT or of an ME EQUIPMENT part shall be removed by ventilation before the ME EQUIPMENT or the ME EQUIPMENT part can be energized, and subsequently the penetration of such mixtures during operation shall be prevented by maintenance of overpressure within the ME EQUIPMENT or the ME EQUIPMENT part by means of air not containing flammable gases or vapours or by means of a physiologically acceptable inert gas (for example nitrogen).

b) The overpressure inside the ENCLOSURE shall be at least 75 Pa in NORMAL CONDITION. The overpressure shall be maintained at the site of potential ignition even if the air or inert gas can escape through openings in the ENCLOSURE that are necessary for the normal operation of ME EQUIPMENT or its parts.

   Energizing ME EQUIPMENT shall only be possible after the required minimum overpressure has been present for a time sufficient to ventilate the relevant ENCLOSURE so that the displaced volume of air or of inert gas is at least five times the volume of the ENCLOSURE. (However, ME EQUIPMENT may be energized at any time or repeatedly if the overpressure is continuously present.)

c) If the overpressure drops below 50 Pa during operation, ignition sources shall be de-energized automatically by means that either shall be located in a place where the requirements and tests of Clause G.4 do not apply, or comply with the requirements of Clause G.5.

d) The external surface of the ENCLOSURE in which the internal overpressure is maintained shall not attain in NORMAL CONDITION and NORMAL USE an operating temperature exceeding 150 °C, measured in an ambient temperature of 25 °C.

   Compliance with the requirements of G.5.4 a) to G.5.4 d) is checked by temperature, pressure and flow measurements and inspection of the pressure monitoring device.

G.5.5 ENCLOSURES with restricted breathing

Where ME EQUIPMENT, its parts or components are enclosed in an ENCLOSURE with restricted breathing the following requirements shall apply:

a) * ENCLOSURES with restricted breathing shall be so designed that the formation of a FLAMMABLE ANAESTHETIC MIXTURE WITH AIR inside the ENCLOSURE does not occur whilst the ENCLOSURE is surrounded by a FLAMMABLE ANAESTHETIC MIXTURE WITH AIR of a high concentration for a period of at least 30 min but without any pressure difference to the space inside the ENCLOSURE.

b) If the required tightness is obtained by gaskets or sealing, the material used shall therefore be resistant to ageing.

   Compliance is checked by application of test B-b of IEC 60068-2-2, Clause 15, temperature 70 °C ± 2 °C, duration 96 h.

c) If the ENCLOSURE contains inlets for flexible cords, their gas-tightness shall be maintained when the cords are stressed by bending or pulling. The cords shall be fitted with adequate anchorages to limit these stresses (see 8.11.3.5).

Copyright International Electrotechnical Commission
Provided by IHS Markit under license with IEC
No reproduction or networking permitted without license from IHS
Not for Resale, 08/26/2020 19:12:41 MDT

Compliance with the requirements of G.5.5 a), G.5.5 b) and G.5.5 c) is checked by application of the following tests:

After completion of the test of G.5.4 b) if relevant, an internal overpressure of 400 Pa is created and 30 pulls of the value shown in Table G.1 are applied to each flexible cord alternately, in the axial direction of the cord inlet and in the least favourable perpendicular direction, each pull without jerks and of 1 s duration. At the end of the test the overpressure is not be reduced to less than 200 Pa.

Table G.1 – Gas-tightness of cord inlets

Mass (*m*) of ME EQUIPMENT kg	**Pull** N
$m \leq 1$	30
$1 < m \leq 4$	60
$m > 4$	100

When the ENCLOSURE of ME EQUIPMENT parts or components is sealed or gas-tight and no doubt exists that the ENCLOSURE complies with the aforementioned requirement, the ENCLOSURE is tested by inspection only.

The operating temperature of the external surface of the ENCLOSURE shall not exceed 150 °C measured at an ambient temperature of 25 °C. The steady state operating temperature of the ENCLOSURE is also measured.

G.6 Requirements and tests for CATEGORY APG ME EQUIPMENT, parts and components thereof

G.6.1 General

ME EQUIPMENT, its parts or components shall not ignite FLAMMABLE ANAESTHETIC MIXTURE WITH OXYGEN OR NITROUS OXIDE. This requirement applies both in NORMAL USE and in the event of any applicable SINGLE FAULT CONDITION, as described in 4.7.

ME EQUIPMENT, its parts or components that do not comply with the requirements of G.6.3 are tested by a CONTINUOUS OPERATION test over a period of 10 min in an ether/oxygen mixture (ether volume percentage 12,2 % ± 0,4 %) after the thermal steady state condition has been attained, but not longer than 3 h after switching on.

G.6.2 * Power supply

Parts or components of CATEGORY APG ME EQUIPMENT that operate in a FLAMMABLE ANAESTHETIC MIXTURE WITH OXYGEN OR NITROUS OXIDE shall be supplied from a source that is isolated from earth by at least insulation equal to one MEANS OF PATIENT PROTECTION and from electrical parts by insulation equal to two MEANS OF PATIENT PROTECTION.

Compliance is checked by inspection of circuit diagrams and measurement.

G.6.3 * Temperatures and low-energy circuits

ME EQUIPMENT, and its parts or components are considered to comply with the requirements of G.6.1 without being tested according to G.6.1 if, in NORMAL USE, NORMAL CONDITION and SINGLE FAULT CONDITIONS (see 4.7):

a) no sparks are produced and no temperatures exceeding 90 °C occur, or

--`,,```,,,,````-`-`,,`,,`,`,,`---

Copyright International Electrotechnical Commission
Provided by IHS Markit under license with IEC
No reproduction or networking permitted without license from IHS Not for Resale, 08/26/2020 19:12:41 MDT

b) a temperature limit of 90 °C is not exceeded, ME EQUIPMENT or its parts contain components that may produce sparks in NORMAL USE, NORMAL CONDITION and applicable SINGLE FAULT CONDITIONS, but the voltage U_{max} and the current I_{max} that can occur in their circuits, taking into account the capacitance C_{max} and the inductance Lmax, comply with the following:

$U_{max} \leq$ ~~L~~U_{zR} with a given I_{zR}, see Figure G.4, and

$U_{max} \leq U_{zC}$ with given C_{max}, see Figure G.5, as well as

$I_{max} \leq I_{zR}$ with a given voltage U_{zR}, see Figure G.4, and

$I_{max} \leq I_{zL}$ with a given inductance L_{max} and $U_{max} \leq 24$ V, see Figure G.6.

– The graphs in Figure G.4, Figure G.5 and Figure G.6 have been obtained with the test apparatus according to ~~F.8~~ Figure G.7 with the most readily flammable mixture of ether vapour with oxygen (ether volume percentage ~~12,2 ± 0,4 %~~ 4,3 ± 0,2 %) for an ignition probability of 10^{-3}. The maximum allowable values of I_{zR} (Figure G.4), U_{zC} (Figure G.5) and I_{zL} (Figure G.6) include a safety factor of 1,5.

– Extrapolation of the curves of Figure G.4, Figure G.5 and Figure G.6 is limited to the areas indicated.

– Voltage U_{max} is taken as the highest no-load voltage occurring in the circuit under investigation, taking into account MAINS VOLTAGE variations as required in 4.10.

– Current I_{max} is taken as the highest current flowing in the circuit under investigation, taking into account MAINS VOLTAGE variations as required in 4.10.

– Capacitance C_{max} and inductance L_{max} are taken as values that occur in the relevant circuit.

– If the equivalent resistance R in Figure G.5 is less than 8 000 Ω, U_{max} is additionally determined with the actual resistance R.

– If the circuit is supplied with a.c., the peak value is taken into account.

– If the circuit is complicated and consists of more than one capacitance, inductance and resistance or a combination thereof an equivalent circuit is calculated to determine the equivalent maximum capacitance, the equivalent maximum inductance and, additionally, the equivalent U_{max} and I_{max} either as d.c. values or a.c. peak values.

– If the energy produced in an inductance or capacitance in a circuit is limited by voltage-limiting or current-limiting devices preventing the limits of Figure G.4, Figure G.5 and Figure G.6 being exceeded, two independent components shall be applied, so that the required limitation of voltage or current is obtained even in the case of a first fault (short circuit or open circuit) in one of these components.

This requirement does not apply to transformers designed and made according to this standard and to wire-wound current-limiting resistors provided with a protection against unwinding of the wire in the event of rupture.

Compliance is checked by inspection, temperature measurements, comparison with design data or by measurement of U_{max}, I_{max}, R, L_{max} and C_{max} and using Figure G.4, Figure G.5 and Figure G.6.

Copyright International Electrotechnical Commission
Provided by IHS Markit under license with IEC
No reproduction or networking permitted without license from IHS
Not for Resale, 08/26/2020 19:12:41 MDT

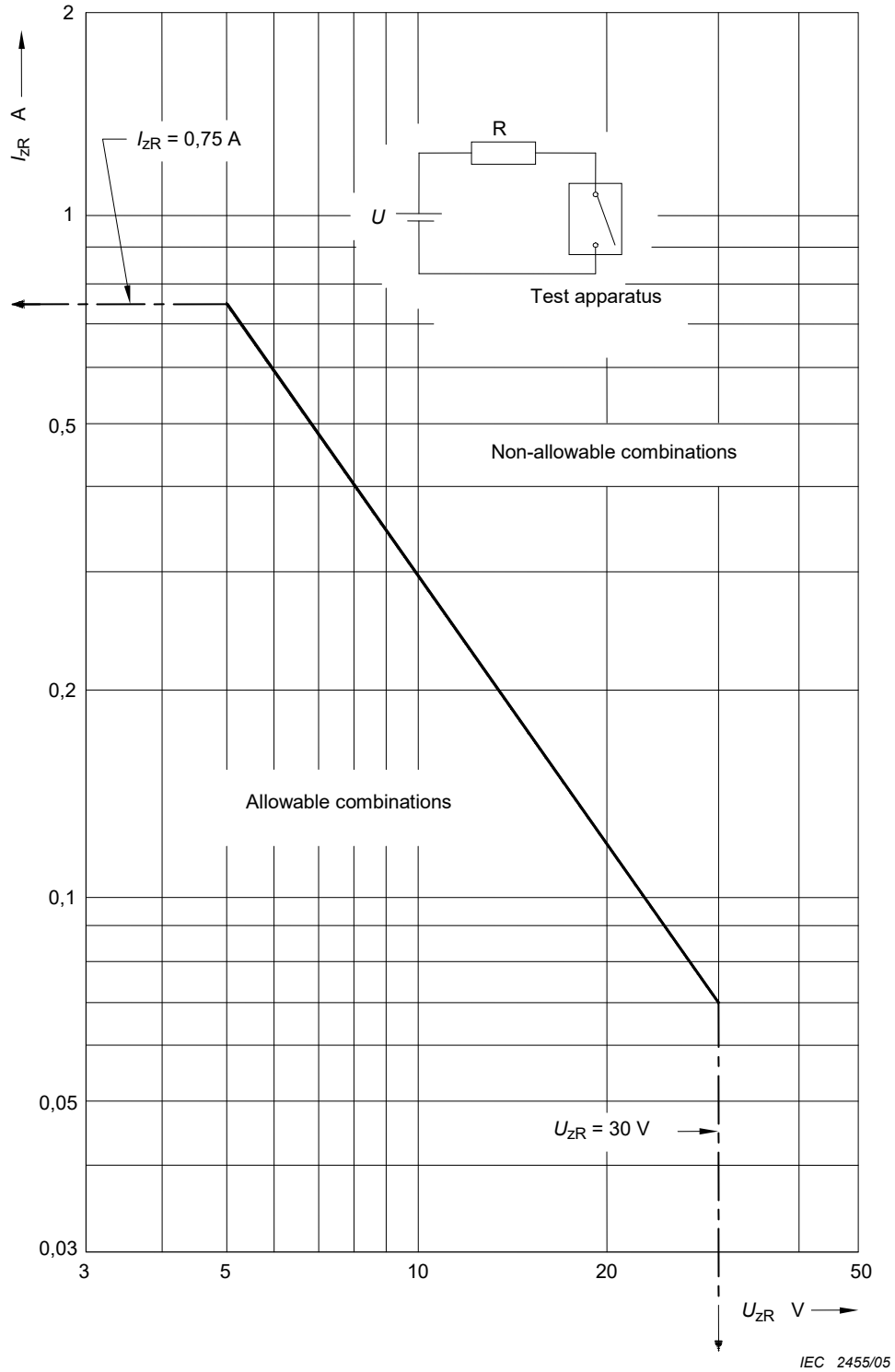

Figure G.4 – Maximum allowable current I_{zR} as a function of the maximum allowable voltage U_{zR} measured in a purely resistive circuit with the most flammable mixture of ether vapour with oxygen

Copyright International Electrotechnical Commission
Provided by IHS Markit under license with IEC
No reproduction or networking permitted without license from IHS
Not for Resale, 08/26/2020 19:12:41 MDT

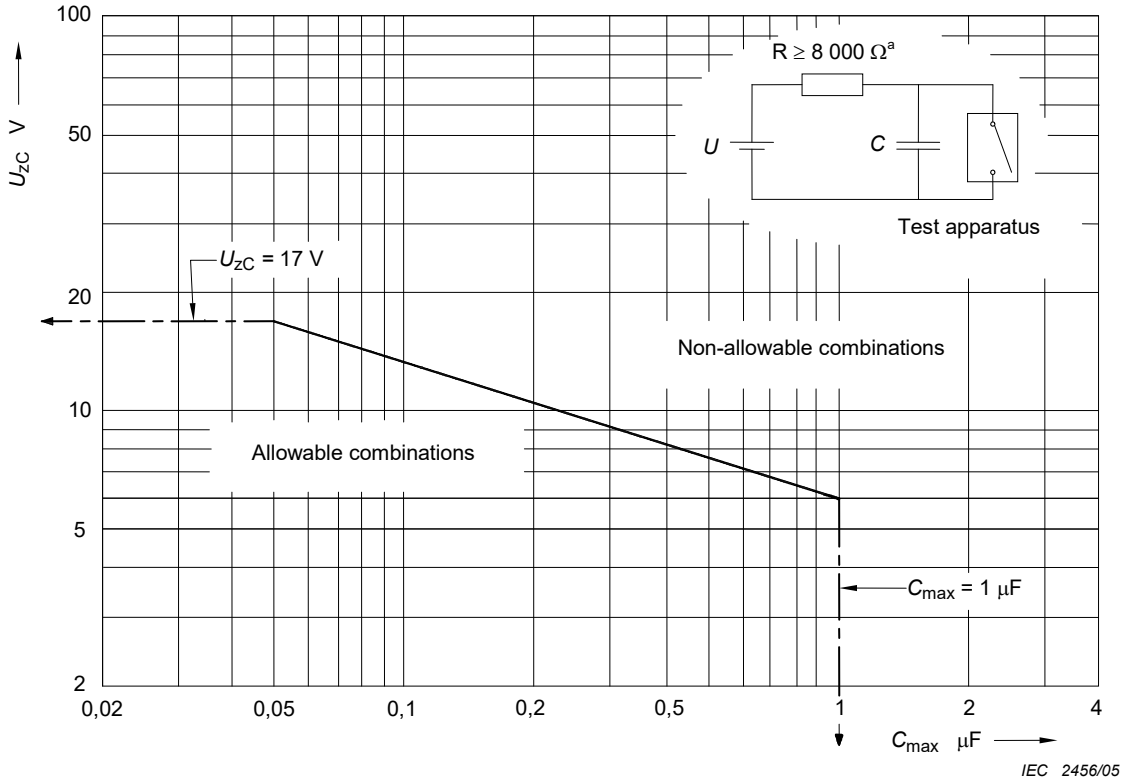

[a] 8 000 Ω or the actual resistance, if *R* is less than 8 000 Ω

Figure G.5 – Maximum allowable voltage U_{ZC} as a function of the capacitance C_{max} measured in a capacitive circuit with the most flammable mixture of ether vapour with oxygen

Copyright International Electrotechnical Commission
Provided by IHS Markit under license with IEC
No reproduction or networking permitted without license from IHS
Not for Resale, 08/26/2020 19:12:41 MDT

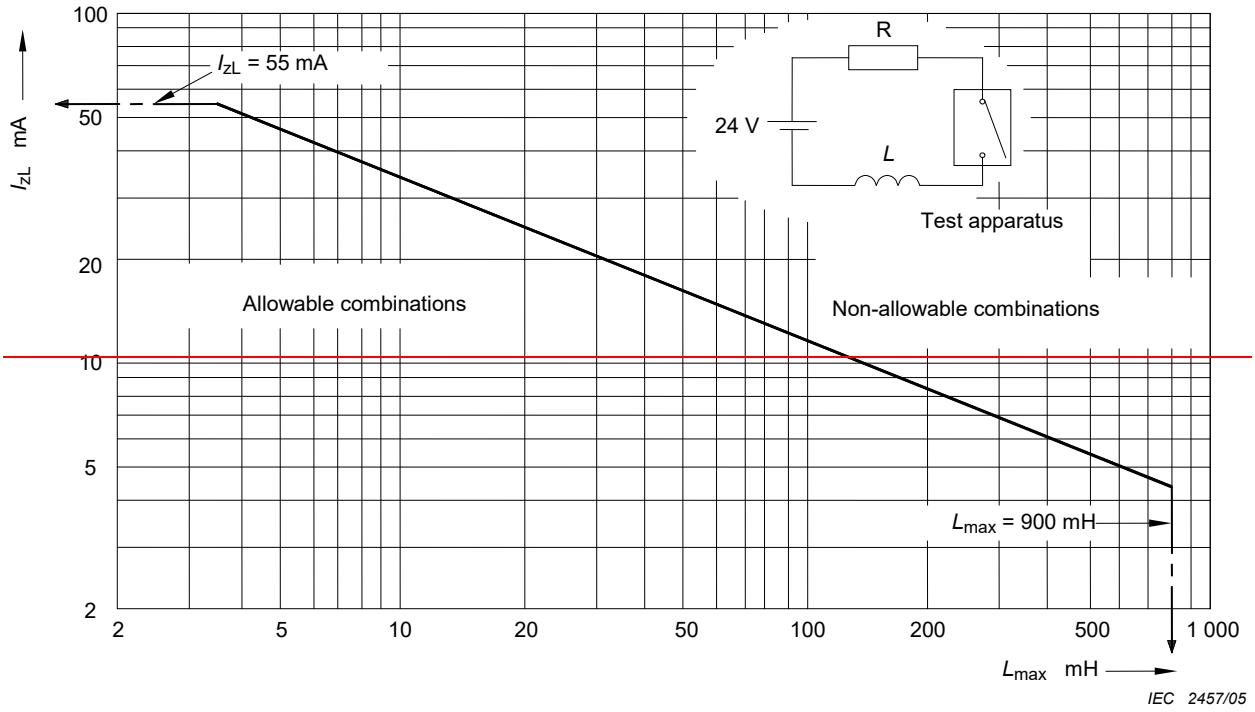

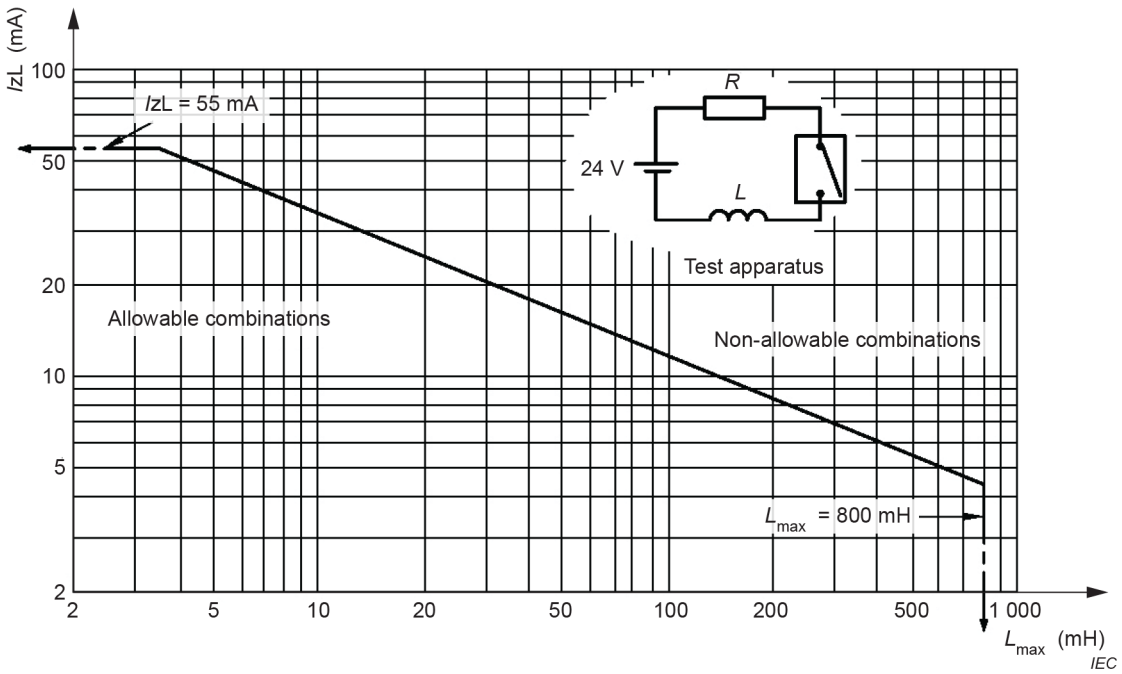

Figure G.6 – Maximum allowable current I_{zL} as a function of the inductance L_{max} measured in an inductive circuit with the most flammable mixture of ether vapour with oxygen

G.6.4 Heating elements

ME EQUIPMENT, its parts and components that heat a FLAMMABLE ANAESTHETIC MIXTURE WITH OXYGEN OR NITROUS OXIDE shall be provided with a non-SELF-RESETTING THERMAL CUT-OUT, as an additional protection against overheating.

Compliance is checked by the corresponding test of 15.4.2.1.

Copyright International Electrotechnical Commission
Provided by IHS Markit under license with IEC
No reproduction or networking permitted without license from IHS
Not for Resale, 08/26/2020 19:12:41 MDT

The current-carrying part of the heating element shall not be in direct contact with the FLAMMABLE ANAESTHETIC MIXTURE WITH OXYGEN OR NITROUS OXIDE.

Compliance is checked by inspection.

G.7 Test apparatus for flammable mixtures

NOTE Formally Appendix F of the second edition.

The test apparatus comprises an ignition space with a volume of at least 250 cm^3, which contains the prescribed atmosphere or mixture and a contact arrangement (see Figure G.7) providing sparks by opening and closing.

The contact arrangement consists of a cadmium disk with two groves and a second disk with four tungsten wires having a diameter of 0,2 mm that slides over the first disk. The free length of the tungsten wires is 11 mm. The shaft to which the tungsten wires are connected rotates with a speed of 80 r/min. The shaft connected to the cadmium disk turns in opposite direction to the shaft connected to the disk with wires.

The ratio of the rotation speed of the shaft connected to the wires and the other shaft is 50:12.

Both shafts are isolated from each other and from the frame.

The ignition space must be able to support an internal overpressure of 1,5 MPa.

With the contact arrangement, the circuit to be tested is closed or opened and it is checked if the sparks will ignite the atmosphere or mixture under test.

Copyright International Electrotechnical Commission
Provided by IHS Markit under license with IEC
No reproduction or networking permitted without license from IHS Not for Resale, 08/26/2020 19:12:41 MDT

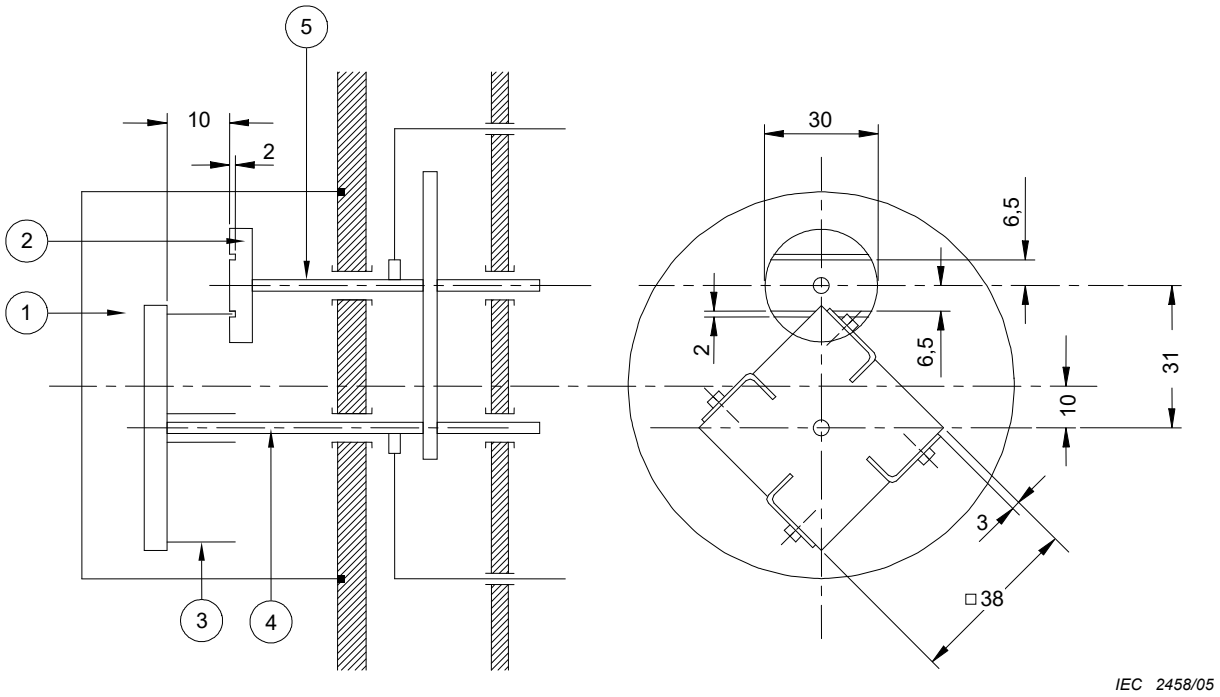

Dimensions in millimetres

Legend

1 Ignition space
2 Cadmium disk
3 Tungsten wire
4 Shaft of wire disk
5 Shaft of disk with grooves

Figure G.7 – Test apparatus

Copyright International Electrotechnical Commission
Provided by IHS Markit under license with IEC
No reproduction or networking permitted without license from IHS
Not for Resale, 08/26/2020 19:12:41 MDT

Annex H
(informative)

PEMS structure, PEMS DEVELOPMENT LIFE-CYCLE and documentation

H.1 Examples for PEMS/PESS structures

A PEMS can be a very simple piece of ME EQUIPMENT or a complex ME SYSTEM or anything in between.

Figure H.1 shows some possible examples of a PEMS.

Figure H.1 a) shows a complex system. The PEMS breaks down into a number of major subsystems, which in turn are made up of subsystems, which include a PESS.

Figure H.1 b) shows a simpler implementation. In this case the intermediate major subsystem level is missing and the PESS is a subsystem of the PEMS itself.

Figure H.1 c) illustrates the simplest implementation of a PEMS. In this case the PEMS and the PESS are the same.

The structure of the PEMS is extremely important for implementing safety requirements. An architecture should be documented for the PEMS that describes the structure of the PEMS and the relationship between each PESS and the PEMS as a whole. The architecture should indicate:

– the division of the PEMS into components, especially those implemented in each PESS and including software components;
– the functions to be performed by each PESS and its components (including where appropriate safety-related functions);
– the interfaces between software components;
– the interfaces between software components and components external to the software.

H.2 PEMS DEVELOPMENT LIFE-CYCLE model

Compliance with the PEMS clause of this standard (Clause 14) requires that a PEMS DEVELOPMENT LIFE-CYCLE be specified and then followed; it does not require that any particular PEMS DEVELOPMENT LIFE-CYCLE is used, but it does require that the PEMS DEVELOPMENT LIFE-CYCLE has certain attributes. These requirements can be found in 14.4.

The PEMS DEVELOPMENT LIFE-CYCLE is a part of the overall product life-cycle.

Figure H.2 is a view of the PEMS DEVELOPMENT LIFE-CYCLE which shows activities grouped into two main PROCESSES. On the left is decomposition PROCESS and on the right is the integration PROCESS.

Figure H.2 illustrates:

– layered design activities;
– for each layer of design, a corresponding layer of integration and VERIFICATION;
– verified parts are integrated to assemble the next higher layer;
– problem resolution PROCESS interactions.

Copyright International Electrotechnical Commission
Provided by IHS Markit under license with IEC
No reproduction or networking permitted without license from IHS Not for Resale, 08/26/2020 19:12:41 MDT

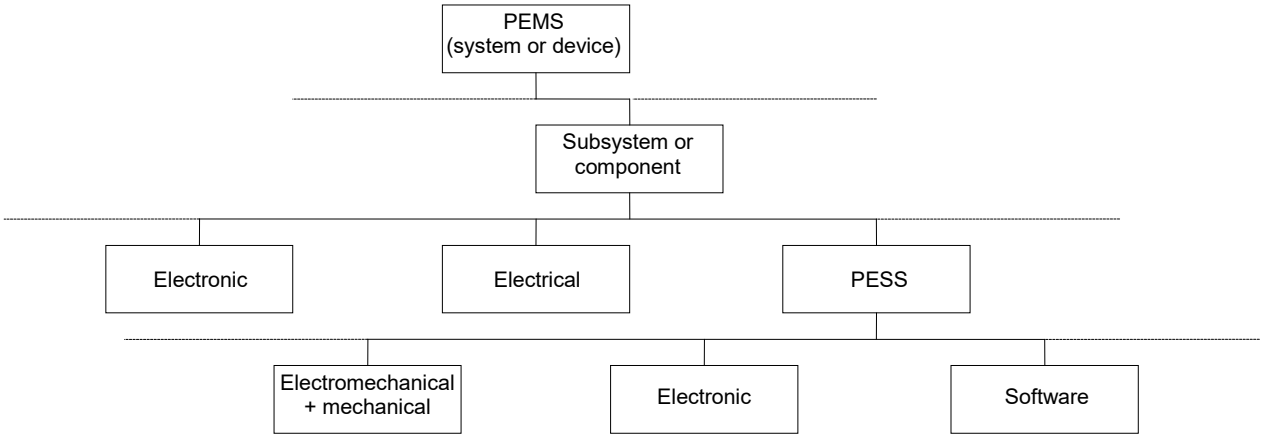

a) Example of a complex system

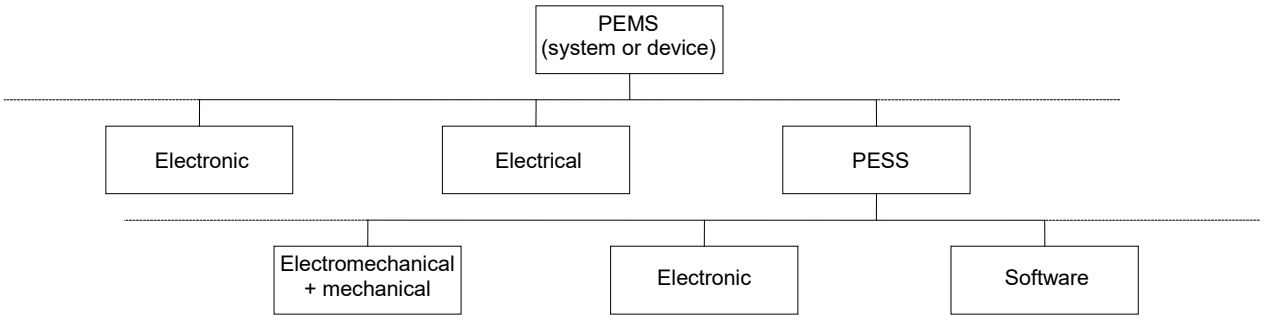

b) Example of a simpler implementation

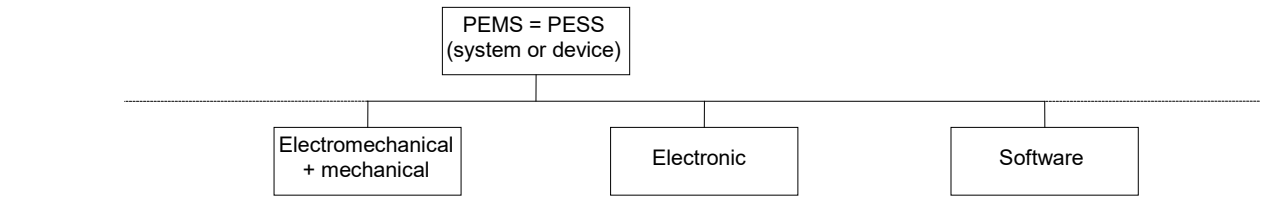

c) Example of the simplest implementation

IEC 2459/05

Figure H.1 – Examples of PEMS/ PESS structures

Copyright International Electrotechnical Commission
Provided by IHS Markit under license with IEC
No reproduction or networking permitted without license from IHS
Not for Resale, 08/26/2020 19:12:41 MDT

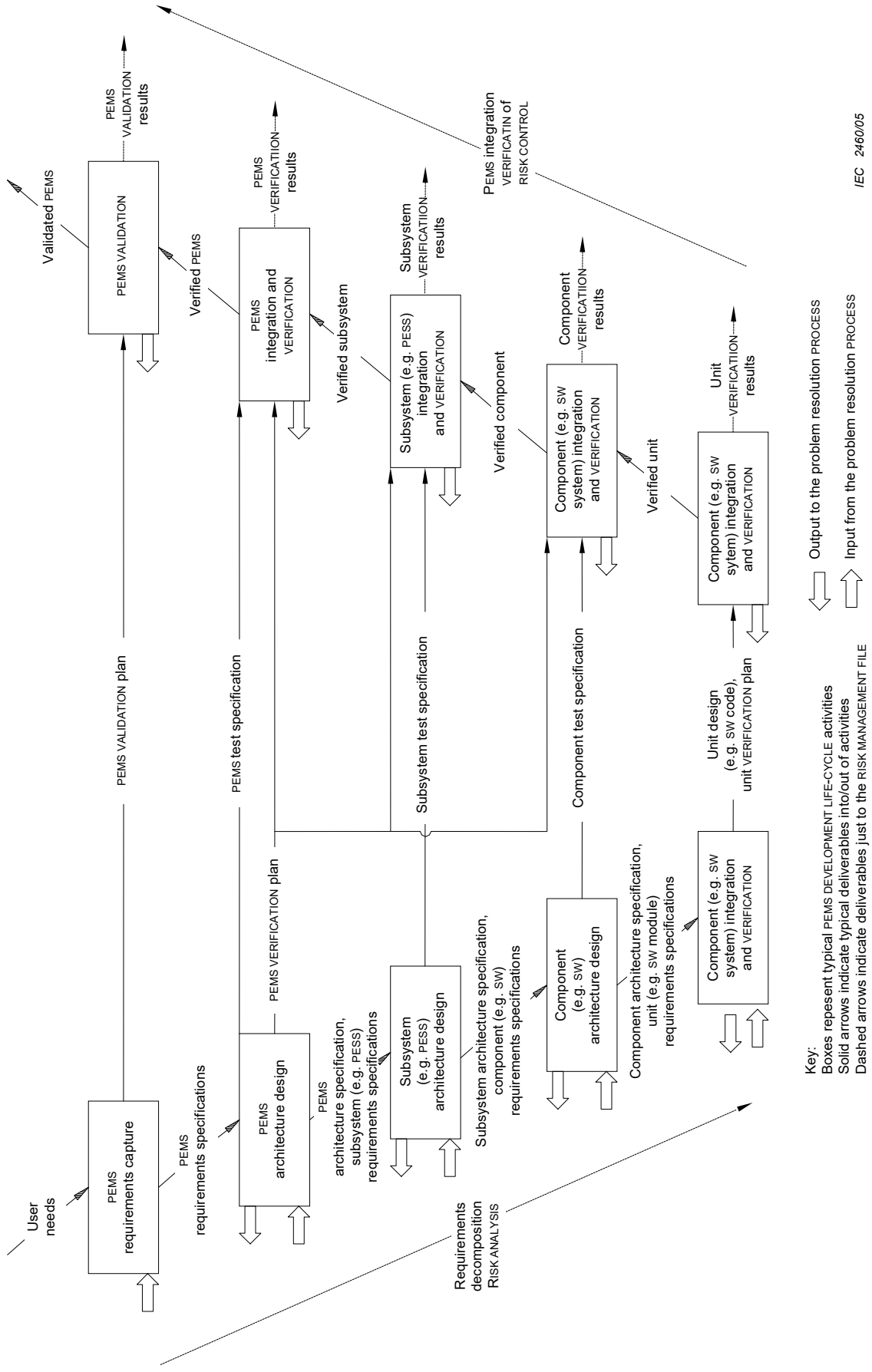

Figure H.2 – A PEMS DEVELOPMENT LIFE-CYCLE model

Copyright International Electrotechnical Commission
Provided by IHS Markit under license with IEC
No reproduction or networking permitted without license from IHS
Not for Resale, 08/26/2020 19:12:41 MDT

As the design is decomposed from the requirements, the functional building blocks, architecture and technology are decided. The decomposition PROCESS concludes when the design information enables the components of the PEMS to be built (examples of such design information are circuit diagrams and software code). The decomposition components are integrated together. VERIFICATION is performed as the components are integrated to determine whether or not the implementation satisfies the requirements. At the conclusion of the integration PROCESS, a PEMS VALIDATION is performed to determine whether or not the PEMS works as intended.

H.3 Software PROCESSES

H.3.1 PEMS DEVELOPMENT LIFE-CYCLE

A PEMS DEVELOPMENT LIFE-CYCLE, such as the one illustrated in Figure H.2, consists of a number of PROCESSES that are composed of activities. Each activity is performed to accomplish specific goals. To apply RISK MANAGEMENT, confidence in the engineering activities on which the RISK MANAGEMENT is based is needed. In particular, this is a requirement for the software life-cycle.

IEC 62304 [26] (under development) describes the processes to be included in the software development life-cycle for the development of safe medical device software.

H.3.2 Requirements specification

To determine which functions create or control RISKS, it is necessary to fully identify the requirements of the PEMS/PESS. It is not possible to do an adequate RISK ASSESSMENT without a complete requirement specification and an architectural design that meets that specification. The requirements should include, as appropriate to the PEMS software:

- functional and capability requirements, including ESSENTIAL PERFORMANCE, physical characteristics, and environmental conditions under which the software is to perform;
- interfaces external to the software;
- safety requirements including RISK CONTROL measures for hardware failures and potential software defects and specifications related to methods of operation and maintenance, environmental influences, and RISK CONTROL;
- software driven alarm signals, warnings and OPERATOR messages;
- security requirements, where lack of security would compromise safety;
- human-factors engineering requirements related to the use of the PEMS, including those related to support for manual operations, human-equipment interactions, constraints on personnel, and areas needing concentrated human attention that are sensitive to human errors and training;
- data definition and database requirements;
- installation and acceptance requirements for the PEMS software;
- documentation to be developed;
- operation and execution requirements;
- maintenance requirements.

RISK ASSESSMENT should be used to determine the extent to which the architecture design can be used to mitigate the RISKS.

Copyright International Electrotechnical Commission
Provided by IHS Markit under license with IEC
No reproduction or networking permitted without license from IHS Not for Resale, 08/26/2020 19:12:41 MDT

H.3.3 Third-party and off-the-shelf (OTS) software

To have the ability to identify known or foreseeable HAZARDS, it is also necessary to characterise any third-party or OTS software used in the PEMS. The developer should establish software requirements for third-party or OTS software. These requirements should include the following:

– title and manufacturer, version level, release date, patch number and upgrade designation;

– the system hardware and software necessary to support proper operation (e.g. processor type and speed, memory type and size, and system, communication and display software requirements);

– interfaces to the software component;

– safety critical and RISK CONTROL measure functions dependent on the software component.

H.3.4 Integration

The developer should establish an integration plan to integrate the components of each PESS and of the PEMS. The plan should include the approach, responsibilities and sequence, and include all software components. If the PESS software is built using incremental integration methods, sufficient regression testing should be performed to ensure that previous VERIFICATION is still sufficient. Integration tests should include test cases which expose software behaviour not only in response to the normal case, but also in response to exceptional, stress or worst case conditions.

H.3.5 Configuration management

Because the RISK ANALYSIS relies on the requirements of the software, configuration management and change control are necessary to ensure that additional software functionality is not added during development without being considered by the RISK MANAGEMENT PROCESS. A configuration management plan should be established that describes:

– the items to be controlled;

– the configuration management activities;

– PROCEDURES and schedule for performing these activities;

– responsibilities for performing these activities;

– PROCEDURES to control the receipt, installation, and acceptance of each software component.

A scheme should be established for the unique identification of software configuration items and version control. This scheme should include any third-party and OTS software components.

H.3.6 Modification/change control

For modification/change control, the following should be performed:

– identification and recording of change requests;

– analysis and evaluation of the changes;

– approval or disapproval of the request;

– implementation, VERIFICATION and release of the modified software.

An audit trail should be maintained, whereby each modification, the reason for the modification, and authorization of the modification can be traced. RECORDS of the history of controlled items should be retrievable.

IEC 62304 describes the processes to be included in the software development life-cycle for the development of safe medical device software.

Copyright International Electrotechnical Commission
Provided by IHS Markit under license with IEC
No reproduction or networking permitted without license from IHS
Not for Resale, 08/26/2020 19:12:41 MDT

H.4 Design and implementation

During application of the PEMS DEVELOPMENT LIFE-CYCLE model, design and implementation will include the selection of:

a) the design environment, for example:
   - software development methods;
   - computer aided software engineering (CASE) tools;
   - programming language;
   - hardware and software development platforms;
   - simulation tools;
   - design and coding standards;

b) electronic components;

c) redundant hardware;

d) human-PEMS interface;

e) energy sources;

f) environmental conditions;

g) third-party software;

h) networking options.

These elements of the design environment can be characterized in general and in the specific manner of their use in the design and implementation PROCESS.

H.5 Documentation

~~Figure H.3 includes all of the documentation required by Clause 14 and ISO 14971:2000. It is intended to show an example structure only. Particular documentary references can be consolidated or distributed among several documents. The clause numbers proceeded by a "#" are references to the clause numbers in ISO 14971:2000. Other numbers refer to the subclauses of this standard.~~ Not used.

Copyright International Electrotechnical Commission
Provided by IHS Markit under license with IEC
No reproduction or networking permitted without license from IHS
Not for Resale, 08/26/2020 19:12:41 MDT

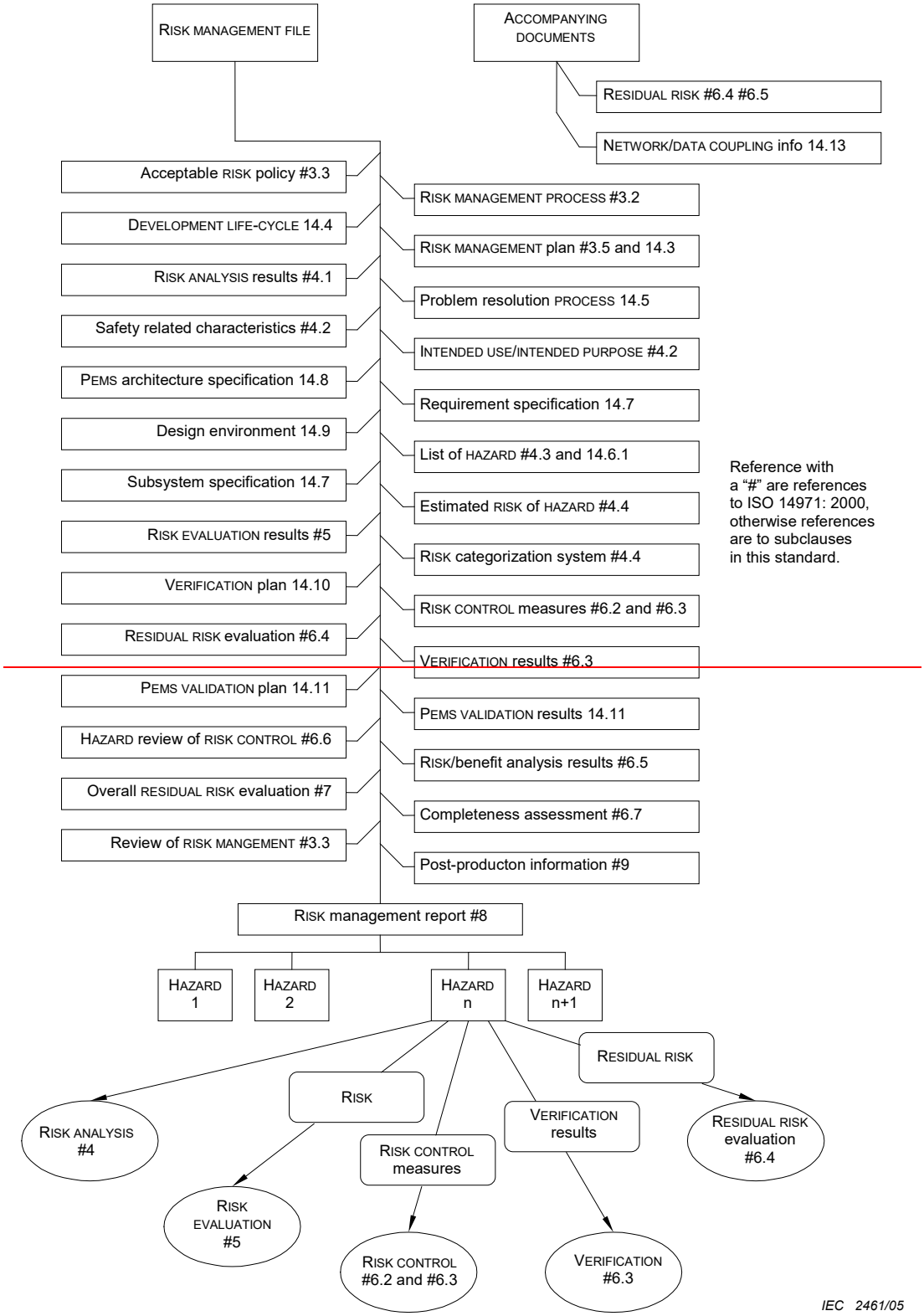

Figure H.3 – ~~PEMS documentation requirements from Clause 14 and ISO 14971:2000~~
Not used

Copyright International Electrotechnical Commission
Provided by IHS Markit under license with IEC
No reproduction or networking permitted without license from IHS
Not for Resale, 08/26/2020 19:12:41 MDT

H.6 ~~NETWORK/DATA COUPLING~~ PEMS intended to be incorporated into an IT-NETWORK

H.6.1 General

In the context of this standard, the information transmitted ~~as a part of NETWORK/DATA COUPLING~~ over an IT-NETWORK is that intended by the MANUFACTURER to be transmittable (i.e. not through illegal or illicit actions of unauthorized persons).

~~NETWORK/DATA COUPLING as used in this standard does not include information transferred across user interfaces. The MANUFACTURER stipulates the possible information types and their transmission protocols in the technical description (see 14.13).~~

H.6.2 System integration responsibilities

ME EQUIPMENT and ME SYSTEMS will sometimes be used together ~~to create a system~~ on an IT-NETWORK. This is likely to become more frequent with the increasing use of computers to analyze clinical data and control treatment.

Sometimes ME EQUIPMENT will have been designed by the MANUFACTURER to work on an IT-NETWORK with other ME EQUIPMENT, however, it will often be the case that ~~the separate~~ ME EQUIPMENT will not have been designed to work with ~~each other~~ all other ME EQUIPMENT on an IT-NETWORK. Someone has to be responsible for ensuring that all the separate ME EQUIPMENT on an IT-network work together satisfactorily ~~in the integrated system~~; in other words, someone has to be responsible for designing the ~~integrated system~~ IT-NETWORK.

It is recognized that the ~~system~~ IT-NETWORK integrator often has to comply with particular regulatory requirements.

In order to perform its function, the ~~system~~ IT-NETWORK integrator needs to know:

– how the integrated ~~system~~ IT-NETWORK is intended to be used;
– the required performance of the integrated ~~system~~ IT-NETWORK;
– the intended configuration of the ~~system~~ IT-NETWORK;
– the constraints on the extendibility of the ~~system~~ IT-NETWORK;
– the specifications of all ME EQUIPMENT and other equipment to be integrated;
– the performance of each ME EQUIPMENT and other equipment; and
– the information flow in and around the ~~system~~ IT-NETWORK.

This information will not be available to the individual MANUFACTURERS, and for this reason each individual MANUFACTURER cannot carry out the role of ~~system~~ IT-NETWORK integrator. In any case the ~~system~~ IT-NETWORK integrator has to be a single person or organisation that has overall responsibility, this overall responsibility can not be shared between several different MANUFACTURERS. The responsibility of a MANUFACTURER is limited to providing the required information on their equipment (see 14.13).

Obviously a RESPONSIBLE ORGANIZATION can employ a MANUFACTURER to integrate their ~~system~~ IT-NETWORK. In this case the whole ~~system~~ IT-NETWORK can become an ME SYSTEM and it will be the MANUFACTURER'S responsibility to provide a correctly integrated system. In this case the system could be separately regulated.

The ~~system~~ IT-NETWORK integrator should be competent to assess and address the HAZARDS that are likely to arise from integrating a ~~system~~ IT-NETWORK and to ensure that the RESIDUAL RISKS of the individual PEMS are maintained.

Typically a ~~system~~ IT-NETWORK integrator would:

– plan the integration of any ME EQUIPMENT or ME SYSTEM and non-medical equipment in accordance with the instructions provided by the various MANUFACTURERS;

--`,,`,,`-`-`,,`,,`,`,,`---
Copyright International Electrotechnical Commission
Provided by IHS Markit under license with IEC
No reproduction or networking permitted without license from IHS
Not for Resale, 08/26/2020 19:12:41 MDT

– perform RISK MANAGEMENT on the integrated ~~system~~ IT-NETWORK; and

– pass on any MANUFACTURER'S instructions to the RESPONSIBLE ORGANIZATION where these are required for the safe operation of the integrated ~~system~~ IT-NETWORK. These instructions should include warnings about the HAZARDS of any change of configuration.

H.7 Design considerations for ~~NETWORK/DATA COUPLING~~ IT-NETWORKS

H.7.1 ~~Introduction~~ Overview

From the viewpoint of a PEMS MANUFACTURER, any type of ~~a NETWORK/DATA COUPLING~~ an IT-NETWORK is a source of additional ~~causes for HAZARDS~~ HAZARDOUS SITUATIONS. In principle any ~~NETWORK/DATA COUPLING~~ IT-NETWORK that is outside the control of the PEMS MANUFACTURER should never be presumed to be 100 % reliable.

H.7.2 Causes of ~~HAZARDS~~ HAZARDOUS SITUATIONS associated with ~~NETWORK/DATA COUPLING~~ IT-NETWORKS

In ~~NETWORK/DATA COUPLED systems~~ IT-NETWORKS, likely causes for ~~HAZARDS~~ HAZARDOUS SITUATIONS are:

– loss of data;

– inappropriate data interchange;

– corrupted data;

– inappropriate timing of data;

– unexpected receipt of data;

– unauthorized access to data.

~~Supplementing Annex A of ISO 14971:2000 when identifying the causes of HAZARDS associated with NETWORK/DATA COUPLING, at least the following should be considered:~~

Supplementing Annex C of ISO 14971:2019, at least the following initiating events or circumstances that can lead to HAZARDOUS SITUATIONS associated with IT-NETWORKS should be considered:

– remote servicing (external access to the network);

– operating system (compatibility of operating systems);

– modification/upgrades of software (operating systems, applications, etc.);

– interface compatibility (data collisions, data formats):

  - connections (modification of hardware, network connectors);
  - network interface boards (compatibility);
  - network protocols (DICOM, HL7, etc.);

– packet address structure/timing;

– normal network loads/bandwidth;

– peak network load;

– data media (longevity and retrievability);

– security (viruses, worms, unauthorized software updates or upgrades);

– maximum acceptable response time;

– acceptable failure rate of the network;

– availability of the network (planned and unplanned maintenance);

– inconsistency in interfaces/formats resulting in loss of fidelity during information transfer;

Copyright International Electrotechnical Commission
Provided by IHS Markit under license with IEC
No reproduction or networking permitted without license from IHS
Not for Resale, 08/26/2020 19:12:41 MDT

– heterogeneous network topologies.

~~Supplementing Annex D of ISO 14971:2000 when considering the potential causes for HAZARDS listed above, the following questions should be taken into account:~~

The following questions should be taken into account when identifying the characteristics that could impact on safety:

a) Reasonably foreseeable misuses

Is connection to the network inconsistent with the INTENDED USE of each constituent PEMS?

b) Incorrect data flow to or from each constituent PEMS

What are the data transferred by the network used for, and to which tasks are they related? What are the consequences of a breakdown of the ~~NETWORK/DATA COUPLING~~ IT-NETWORK ?

c) Deviation from the specified operational characteristics of any constituent PEMS

What are the operational characteristics of the PEMS and to what degree are they affected by the ~~NETWORK/DATA COUPLING~~ IT-NETWORK?

d) Incomplete characterization of ~~NETWORK/DATA COUPLING~~ IT-NETWORK parameters

Is the network topology, configuration, parameters (e.g. open or closed, bandwidth, transmission protocol) completely characterized? Are there any breakdown characteristics/concepts and what are these?

e) Excessive use/load of the ~~NETWORK/DATA COUPLING~~ IT-NETWORK by the network nodes

What is the planned number of network nodes and their assumed degree of use? Are the resources sufficient to meet the needs of both the ~~NETWORK/DATA COUPLING~~ IT-NETWORK itself and the devices connected to it?

f) Use errors

What skills are required by the OPERATOR for the effective operation of the system?

g) Inadequate configuration management

Do periodic service tasks alter the ~~network's~~ IT-NETWORK'S characteristics (e.g. after remote access, updates or upgrades)? Does the RESPONSIBLE ORGANIZATION ensure that modifications to each constituent PEMS are reviewed and approved?

h) Information in wrong place

Does data arrive at a convenient and predictable location? Is it accompanied by irrelevant data that could confuse the OPERATOR or obscure the wanted data? When it arrives, is its source adequately indicated?

H.7.3 ~~Network classification based on the consequence to the PATIENT~~ Not used

~~H.7.3.1 Consequence to the PATIENT~~

~~In order to relate the causes in H.7.2 to the consequences for the PATIENT, it may be useful to classify NETWORK/DATA COUPLINGS both by the consequences and the reaction time, where reaction time is the time delay between a NETWORK/DATA COUPLING failure and the onset of HARM to the PATIENT.~~

~~Table H.1 contains an example of a NETWORK/DATA COUPLING classification based on these considerations.~~

~~H.7.3.2 Class C NETWORK/DATA COUPLING (PATIENT vital data, time critical)~~

~~This is the NETWORK/DATA COUPLING for all time critical application/PROCESSES. It is not linked to any other network, because a link could result in uncontrollable RISKS. All resources are available only for the nodes of this network. The availability needs to be close to 100 %. Disruptions need to be avoided and last for only a few minutes per year. Responsibility is~~

Copyright International Electrotechnical Commission
Provided by IHS Markit under license with IEC
No reproduction or networking permitted without license from IHS
Not for Resale, 08/26/2020 19:12:41 MDT

assigned to a single PEMS MANUFACTURER/system contractor only. Network nodes comply with the requirements established by this MANUFACTURER/contractor. An example of this class is a PATIENT monitoring network.

Table H.1 – NETWORK/DATA COUPLING classification Not used

Consequence	Reaction time	Class	Example(s)
Death/serious injury	Second(s)	C	Infusion (closed loop); false control of a surgical robot
	Minute(s)	C	Suppressed alarm transmission
	Hour(s)	C/B	False therapy data to ventilator
Medium injury	Second(s)	C	Wrong alarm transmission, false control of a surgical robot
	Minute(s)	C/B	Wrong alarm transmission, false control of a surgical robot
	Hour(s)	C/B	Falsified image; loss of a therapy report
Minor injury	Second(s)	B	
	Minute(s)	B	Loss of a radiograph
	Hour(s)	B/A	
Negligible	Second(s)	A	
	Minute(s)	A	
	Hour(s)	A	

H.7.3.3 Class B NETWORK/DATA COUPLING (PATIENT vital data, non-time critical)

This is the NETWORK/DATA COUPLING for non-time critical application/PROCESSES that handle therapeutic or diagnostic PATIENT data. This NETWORK/DATA COUPLING can be linked to another one by a defined and controllable/secured interface. The availability needs to be very high, and because of a lack of alternatives, disruptions should last only for short periods.

– The responsibility is assigned to the RESPONSIBLE ORGANIZATION or system integrator. In the case of multiple PEMS, the contention of data priority needs to be defined.

– The network nodes should follow selected criteria/minimum set of parameters. A radiology network can serve as an example.

H.7.3.4 Class A NETWORK/DATA COUPLING

This is the NETWORK/DATA COUPLING for any applications (including PATIENT administrative/demographic data) that operate on validated PATIENT data only and are not assigned to class "C" or "B" networks. Also, it can be accepted that these applications are unavailable for a longer period because there are alternatives. An example is a general hospital administration network where:

– the responsibility is assigned to the RESPONSIBLE ORGANIZATION;

– there are many types of network nodes.

Copyright International Electrotechnical Commission
Provided by IHS Markit under license with IEC
No reproduction or networking permitted without license from IHS
Not for Resale, 08/26/2020 19:12:41 MDT

H.7.4 ~~NETWORK/DATA COUPLING~~ IT-NETWORK parameters

The use of ~~a NETWORK/DATA COUPLING~~ an IT-NETWORK for exchange of data either between PEMS or between PEMS and other information technology equipment requires the knowledge about both the structure of the ~~NETWORK/DATA COUPLING~~ IT-NETWORK and the PROCESSES/functions running inside them. This is important because MANUFACTURERS of PEMS or ~~NETWORK/DATA COUPLINGS~~ IT-NETWORKS should select the configuration of their products such that:

– they comply with internationally recognized network standards (Ethernet, Fast Ethernet, GigaBitEthernet, FDDI, etc.) and use the available bandwidth appropriately according to the INTENDED USE;

– they achieve the optimal performance for their application

A mixture of different ~~NETWORK/DATA COUPLINGS~~ IT-NETWORK configurations/parameter settings can emerge which are not always compatible for the different ~~NETWORK/DATA COUPLINGS~~ IT-NETWORK nodes in spite of the fact that they comply to valid international standards.

To avoid or at least to minimize the resulting potential of disruption, a match of a minimum set of ~~NETWORK/DATA COUPLINGS~~ IT-NETWORK parameters derived from the relevant standards is required.

~~To ensure a reliable installation of NETWORK/DATA COUPLED PEMS and minimize the RISK to PATIENTS, the PEMS MANUFACTURER, the RESPONSIBLE ORGANIZATION, and the system integrator need to communicate all relevant technical parameters to each other. This level of detail is necessary to avoid inappropriate assumptions that result in unacceptable RISK.~~

Figure H.4 contains a list of parameters potentially required to be specified. Due to the rapid evolution of ~~NETWORK/DATA COUPLING~~ IT-NETWORK technology, this table should be seen as a starting point. It should be clear if the table should be maintained and who should be responsible for maintaining it.

Copyright International Electrotechnical Commission
Provided by IHS Markit under license with IEC
No reproduction or networking permitted without license from IHS
Not for Resale, 08/26/2020 19:12:41 MDT

Objects	Description		Value/Comment
Application and Operating System:			
Operating System / Version:			
Network protocols:			
Detailed data for specific application / transport protocol (if used)			
HL7	HL 7 version		
	Formats of message types used		
	Free fields (~~which~~ that are used)		
	Ports		
	HL7 Protocol (TCP/IP Lower Layer)		
DICOM Service classes	**A) Test:**	Verification	
	B) Transfer:	Storage	
		Query/Retrieve	
	C) Documentation:	Print management	
	D) Organization:	Modality work list management	
		Performed procedure step	
	E) Information:	Study contents notification	
		Patient management	
		Storage commitment	
		Study component management	
		Results management	
	F) External Storage:	Media storage	
DICOM Objects	e.g. COMPUTER RADIOGRAPHY IMAGE		
	Other Modality Objects		
DICOM host name			
DICOM AET called			
DICOM AET calling			
DICOM Port called			
DICOM Port calling			
Detailed Parameters with respect to the lower protocol layers			
Network data	**Physical connection**		
	Network interface card parameters		
Network-Administration			
Port number of connected Switch / HUB / Router			
IP-Address			
Subnet mask			
Host-Name			
IT-Domain			
Active-Directory / LDAP Server			
Default Gateway (Access via Router)			
Remote Control			
Remote Monitoring			
Modem Connection			
Remote Service IP-Address			
Other Parameters			

Figure H.4 – Example of potential parameters required to be specified for ~~NETWORK/DATA COUPLING~~ an IT-NETWORK

Copyright International Electrotechnical Commission
Provided by IHS Markit under license with IEC
No reproduction or networking permitted without license from IHS
Not for Resale, 08/26/2020 19:12:41 MDT

Annex I
(informative)

ME SYSTEMS aspects

I.1 Combinations of ME EQUIPMENT and non-ME EQUIPMENT

I.1.1 Introduction

This annex provides a summary of situations that could occur when different combinations of equipment are used in various medical environments. To keep this summary short, no more than two items of equipment (A and B) are used per situation.

I.1.2 Localities in a medical environment

The following localities are foreseen (see also Table I.1):

– the PATIENT ENVIRONMENT as part of a medically used room;

– a medically used room, excluding the PATIENT ENVIRONMENT;

– the non-medically used room (a room not designed for medical treatment, for example, an office or a storage room).

A protective earth can be dedicated to each of the three localities listed above.

NOTE A potential difference *(V)* can exist between the protective earths in different localities. In case of an interruption of protective earthing (fault condition) for equipment in the PATIENT ENVIRONMENT, this potential difference can appear on the ENCLOSURE of the equipment ~~causing a HAZARD~~ resulting in a HAZARDOUS SITUATION for the OPERATOR or for the PATIENT if the OPERATOR simultaneously touches the equipment and the PATIENT, or for the PATIENT if the ~~ME EQUIPMENT~~ APPLIED PART is of TYPE B.

I.1.3 Basic principles

– PATIENTS should only be connected to APPLIED PARTS of ME EQUIPMENT complying with this standard. Other equipment should comply with relevant IEC or ISO standards.

– In fault condition the allowable TOUCH CURRENT is 500 μA.

– All equipment complying with the safety standard applicable to the originally intended, non-medical use, herein called IEC XXXXX, and placed in the PATIENT ENVIRONMENT needs measures to limit the TOUCH CURRENT, if this exceeds the values specified in 16.6.1.

I.1.4 Examples of ME SYSTEMS

Two items of equipment are placed within the PATIENT ENVIRONMENT (see situation No. 1 in Table I.1).

There are several possibilities designated 1a through 1f:

1a: Items A and B both comply with IEC 60601: Subclause 16.6 is satisfied.

1b: Items A and B both comply with IEC 60601 and are powered through a MULTIPLE SOCKET-OUTLET: LEAKAGE CURRENTS might be too high when the earth conductor in the MULTIPLE SOCKET-OUTLET is broken.

1c: Item A complies with IEC 60601 and item B complies with IEC XXXXX: only the TOUCH CURRENT of item B has to be limited when any single PROTECTIVE EARTH CONDUCTOR or the equivalent conductor of the equipment, is interrupted, if necessary, by applying an additional protective earth or a separating transformer to item B.

1d: Same as 1c, with both items powered through a MULTIPLE SOCKET-OUTLET: LEAKAGE CURRENTS might be too high for causes as listed under 1b and 1c.

Copyright International Electrotechnical Commission
Provided by IHS Markit under license with IEC
No reproduction or networking permitted without license from IHS
Not for Resale, 08/26/2020 19:12:41 MDT

1e: Item A is powered from item B with item A complying to IEC 60601 and being an insert to item B, complying to IEC XXXXX. Item B needs the measures for a power supply as described by the MANUFACTURER and needs to fulfil the requirement of 16.3. If necessary, apply an additional protective earth or a separating transformer to item B.

1f: Same as 1e, with item A not being an insert to item B: see 1e.

Situations 2 and 3 can be derived from situation 1 of Table I.1.

NOTE The practical means of compliance indicated in Table I.1 are not intended to be an exhaustive list.

Copyright International Electrotechnical Commission
Provided by IHS Markit under license with IEC
No reproduction or networking permitted without license from IHS Not for Resale, 08/26/2020 19:12:41 MDT

Table I.1 – Some examples of ME SYSTEMS for illustration

Situation No.		Medically used room		Non-medically used room	Examples of possible causes for exceeding LEAKAGE CURRENT limits	Practical means of compliance Apply 16.5 in all situations
		Inside the PATIENT ENVIRONMENT	Outside the PATIENT ENVIRONMENT			
1	**1a** Items A and B are ME EQUIPMENT	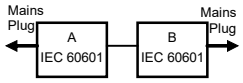			Multiplied APPLIED PARTS of the same type can cause the total PATIENT LEAKAGE CURRENT to exceed limits See Note 1.	– Verify total PATIENT LEAKAGE CURRENT
	1b Items A and B are ME EQUIPMENT powered via a MULTIPLE SOCKET-OUTLET	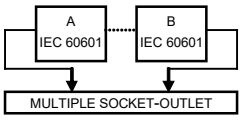			Earth conductor of the MULTIPLE SOCKET-OUTLET is broken See also 1a.	– Additional PROTECTIVE EARTH CONNECTION (for A or B) or, – Separating transformer
	1c Item A is ME EQUIPMENT and B is Non-ME EQUIPMENT	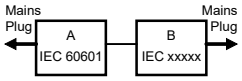			Due to high TOUCH CURRENT of B	– Additional PROTECTIVE EARTH CONNECTION (for B) or, – Separating transformer (for B)
	1d Item A is ME EQUIPMENT and B is non-ME EQUIPMENT powered via a MULTIPLE SOCKET-OUTLET	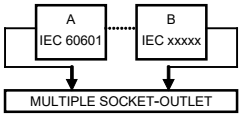			The earth conductor of the MULTIPLE SOCKET-OUTLET is broken or, Due to high TOUCH CURRENT of B	– Additional PROTECTIVE EARTH CONNECTION (for A or B) or, – Separating transformer
	1e Item A is ME EQUIPMENT powered from specified power supply in item B	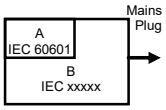			Due to high TOUCH CURRENT of B	– Additional PROTECTIVE EARTH CONNECTION (for B) or, – Separating transformer (for B)
	1f Item A is ME EQUIPMENT powered from NON-ME EQUIPMENT power supply in B	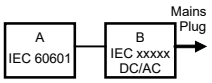				

Copyright International Electrotechnical Commission
Provided by IHS Markit under license with IEC
No reproduction or networking permitted without license from IHS
Not for Resale, 08/26/2020 19:12:41 MDT

Table I.1 *(continued)*

Situation No.		Medically used room: Inside the PATIENT ENVIRONMENT	Medically used room: Outside the PATIENT ENVIRONMENT	Non-medically used room	Examples of possible causes for exceeding LEAKAGE CURRENT limits	Practical means of compliance Apply 16.5 in all situations
2	**2a** Items A and B are ME EQUIPMENT				No causes of exceeding LEAKAGE CURRENT	– No further measures are necessary
	2b Items A and item B are ME EQUIPMENT powered via a MULTIPLE SOCKET-OUTLET	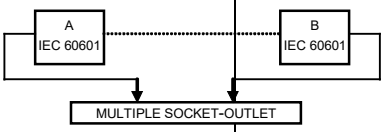			Earth conductor of the MULTIPLE SOCKET-OUTLET is broken	– Additional PROTECTIVE EARTH CONNECTION (for A or B) or, – Separating transformer
	2c Item A is ME EQUIPMENT and item B is non-ME EQUIPMENT				Due to high TOUCH CURRENT of B See rationale for 16.5.	– Do not use metal connector housing or, – SEPARATION DEVICE
	2d Item A is ME EQUIPMENT and item B is non-ME EQUIPMENT powered via a MULTIPLE SOCKET-OUTLET	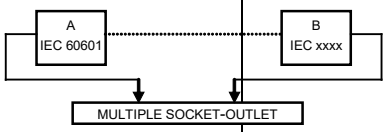			The earth conductor of the MULTIPLE SOCKET-OUTLET is broken	– Additional PROTECTIVE EARTH CONNECTION (for A or B) or, – Separating transformer
3	**3a** Items A and B are ME EQUIPMENT	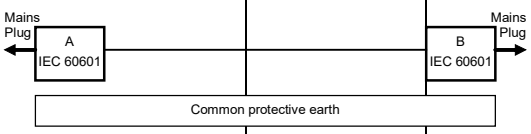			No causes of exceeding LEAKAGE CURRENT	– No further measures are necessary
	3b Item A is ME EQUIPMENT and item B is non-ME EQUIPMENT	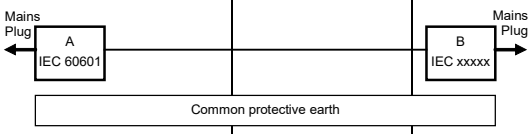			Due to high TOUCH CURRENT of B See rationale for 16.5.	– Do not use metal connector housing for SIGNAL INPUT/OUTPUT PART or, – SEPARATION DEVICE
	3c Item A is ME EQUIPMENT and item B in is ME EQUIPMENT or non-ME EQUIPMENT				a) Potential difference between PROTECTIVE EARTH CONNECTIONS of A and B b) Due to high TOUCH CURRENT of B See rationale for 16.5.	– Additional PROTECTIVE EARTH CONNECTION for (A), or – SEPARATION DEVICE, or – Do not use metal connector housing in the PATIENT ENVIRONMENT

Copyright International Electrotechnical Commission
Provided by IHS Markit under license with IEC
No reproduction or networking permitted without license from IHS
Not for Resale, 08/26/2020 19:12:41 MDT

Table I.1 *(continued)*

NOTE 1 No causes of TOUCH CURRENT or EARTH LEAKAGE CURRENT exceeding limits.
NOTE 2 IEC 60601: MEDICAL ELECTRICAL EQUIPMENT in compliance with IEC 60601.
NOTE 3 IEC xxxxx: Non-medical equipment in compliance with relevant IEC safety standards.
NOTE 4 Separating transformer: see 16.9.2.1.
NOTE 5 If equipment "B" is outside the PATIENT ENVIRONMENT and if equipment "A" is a CLASS II equipment and has accessible conductive parts connected to the PROTECTIVE EARTH CONNECTION of equipment "B" then additional safety measures could be necessary, for example: additional protective earth for "B" or separating transformer or SEPARATION DEVICE.

I.2 Examples of application of MULTIPLE SOCKET-OUTLETS (MSO)

Figure I.1 shows an example of the construction of a MULTIPLE SOCKET-OUTLET. Figure I.2 shows some examples of application of MUPTILE SOCKET-OUTLETS.

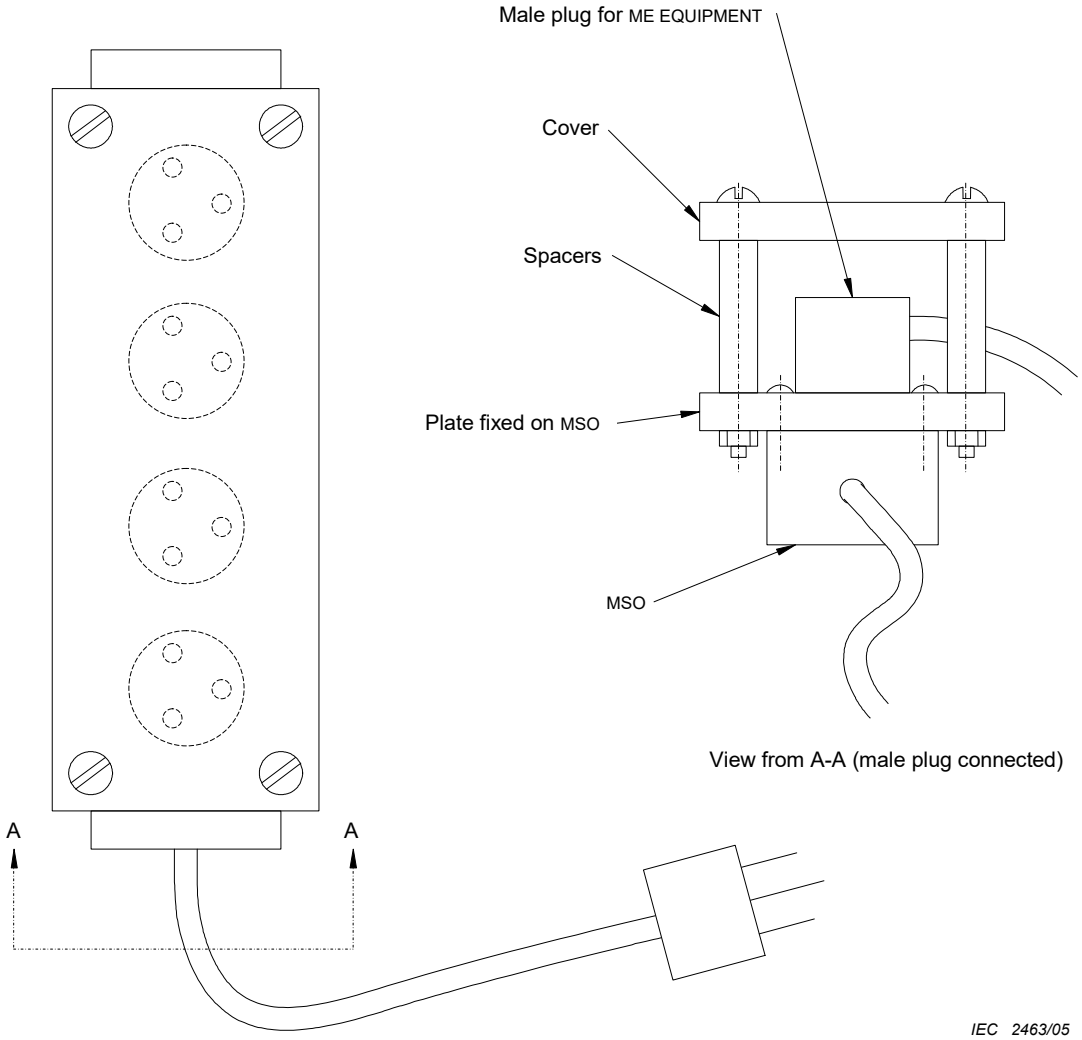

Figure I.1 – Example of the construction of a MULTIPLE SOCKET-OUTLET (MSO) (accessible only with the use of a TOOL)

Copyright International Electrotechnical Commission
Provided by IHS Markit under license with IEC
No reproduction or networking permitted without license from IHS
Not for Resale, 08/26/2020 19:12:41 MDT

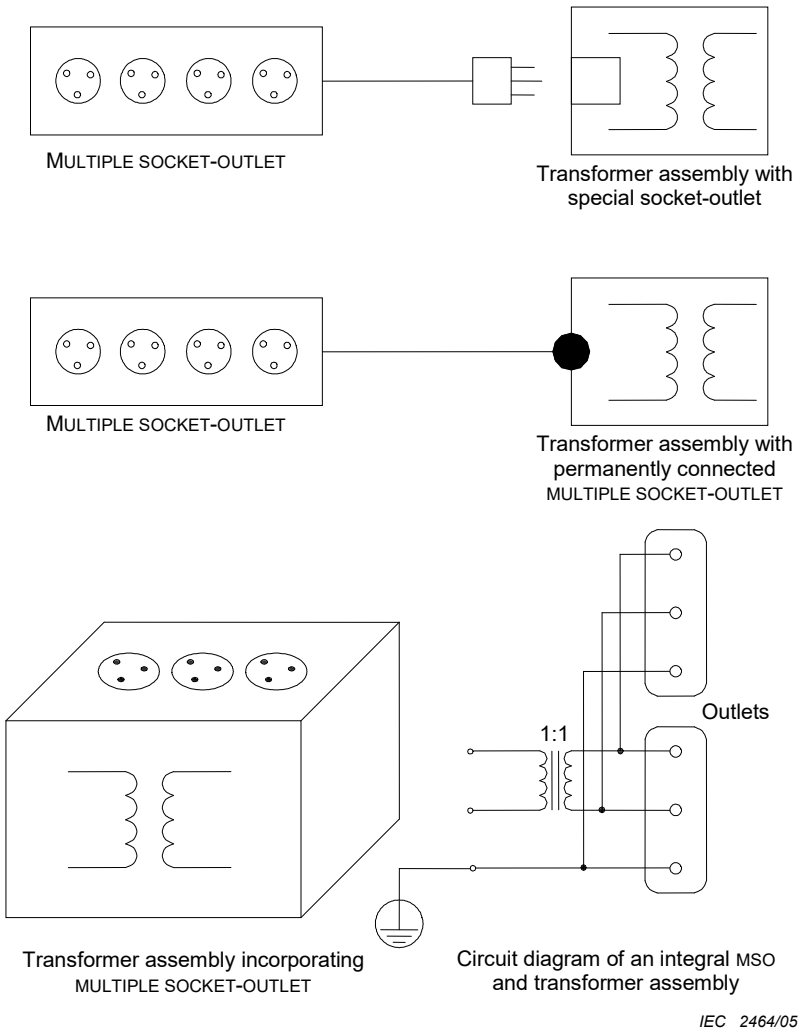

Figure I.2 – Examples of application of MULTIPLE SOCKET-OUTLETS (MSO)

Copyright International Electrotechnical Commission
Provided by IHS Markit under license with IEC
No reproduction or networking permitted without license from IHS
Not for Resale, 08/26/2020 19:12:41 MDT

Annex J
(informative)

Survey of insulation paths

(see 8.5.1)

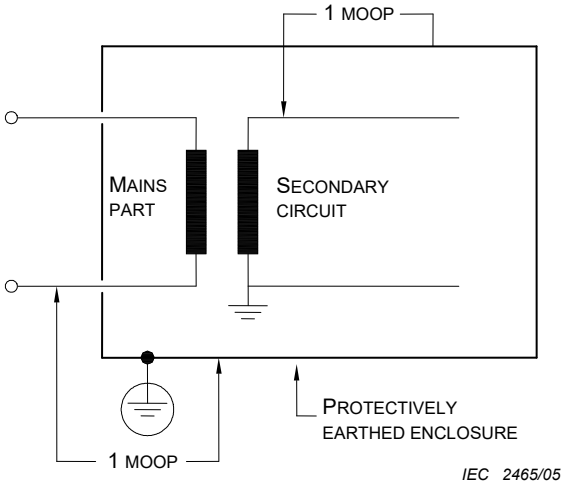

Figure J.1 – Insulation example 1

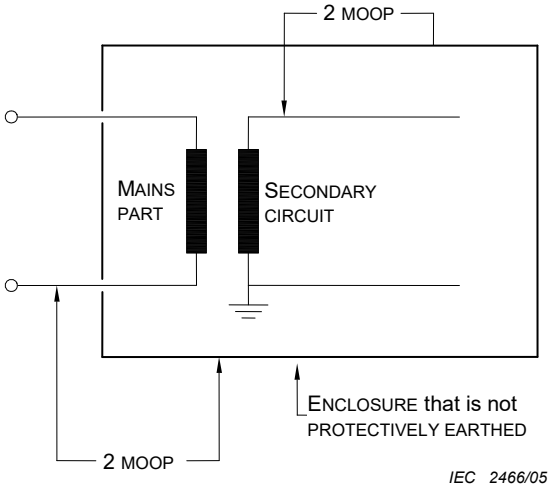

Figure J.2 – Insulation example 2

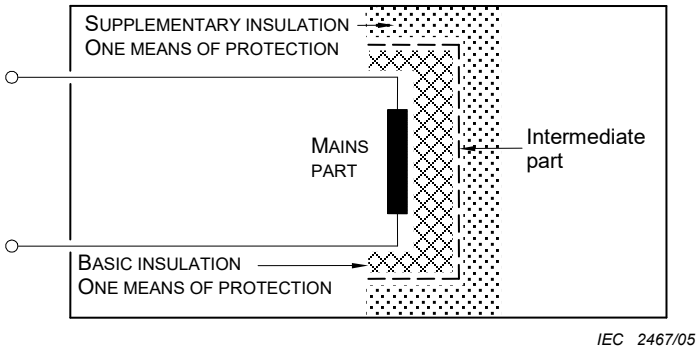

Figure J.3 – Insulation example 3

Copyright International Electrotechnical Commission
Provided by IHS Markit under license with IEC
No reproduction or networking permitted without license from IHS
Not for Resale, 08/26/2020 19:12:41 MDT

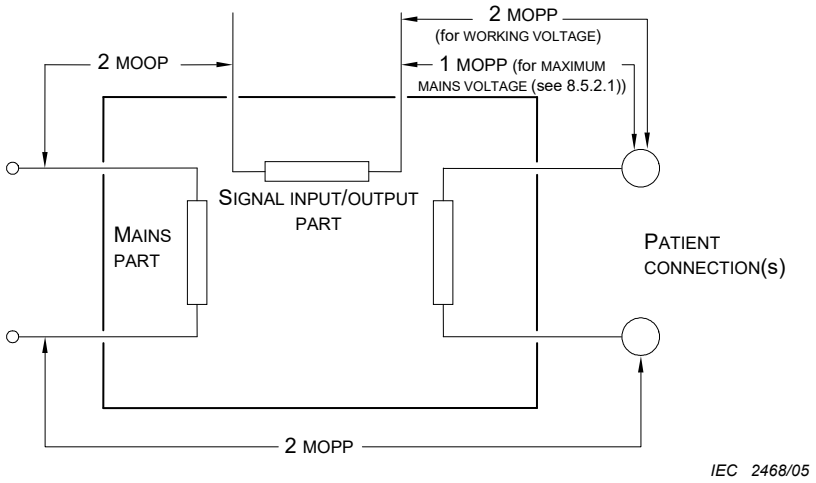

Figure J.4 – Insulation example 4

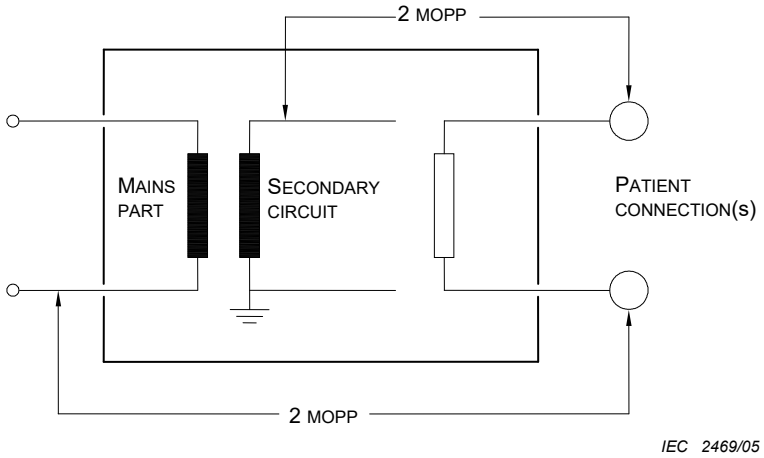

Figure J.5 – Insulation example 5

--`,,```,,,,````-`-`,,`,,`,`,,`---
Copyright International Electrotechnical Commission
Provided by IHS Markit under license with IEC
No reproduction or networking permitted without license from IHS
Not for Resale, 08/26/2020 19:12:41 MDT

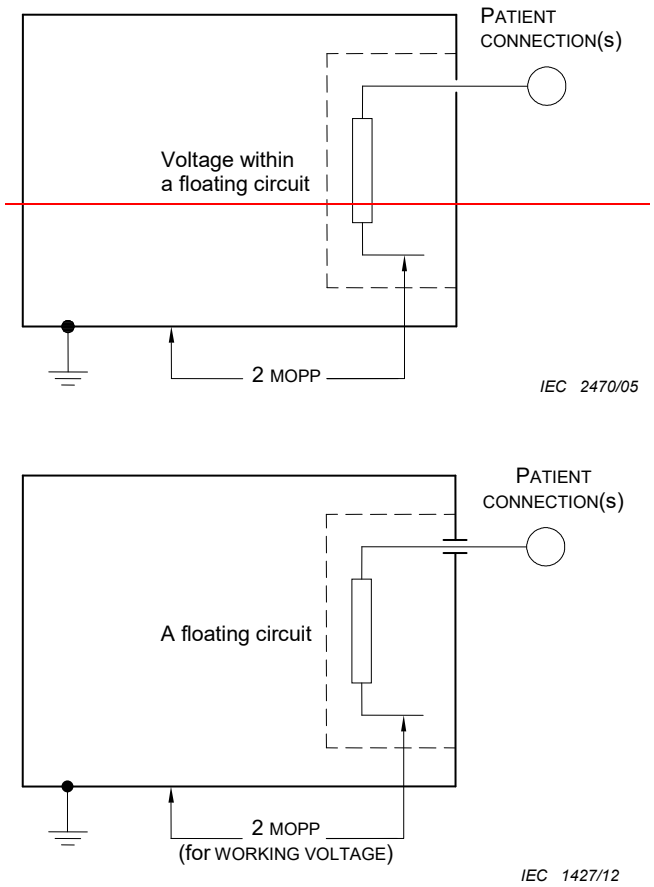

Figure J.6 – Insulation example 6

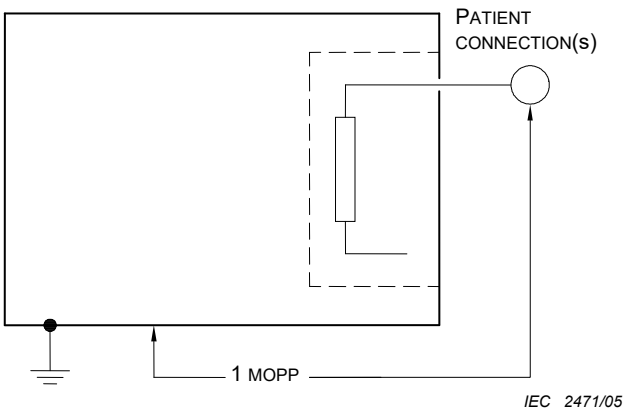

NOTE WORKING VOLTAGE is the MAXIMUM MAINS VOLTAGE.

Figure J.7 – Insulation example 7

Copyright International Electrotechnical Commission
Provided by IHS Markit under license with IEC
No reproduction or networking permitted without license from IHS
Not for Resale, 08/26/2020 19:12:41 MDT

Annex K
(informative)

Simplified PATIENT LEAKAGE CURRENT diagrams

Figure K.2, Figure K.4 and Figure K.5 illustrate a special test condition in Table 4, which is neither a NORMAL CONDITION nor a SINGLE FAULT CONDITION.

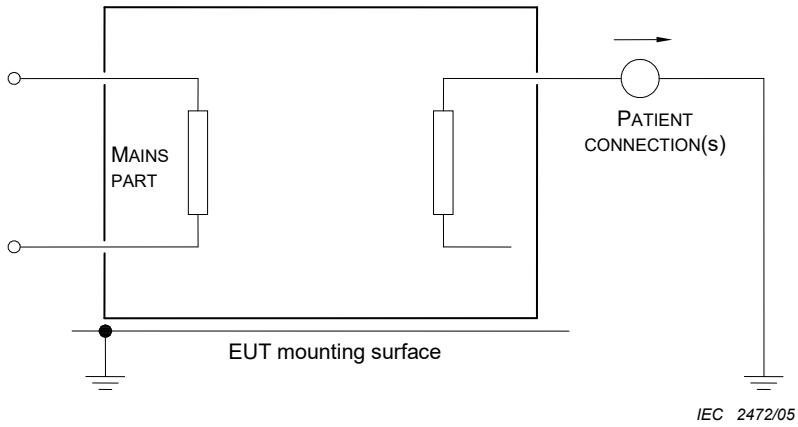

Current in μA

APPLIED PART TYPE	NORMAL CONDITION	SINGLE FAULT CONDITION
CF	10	50
BF	100	500
B	100	500

Example with the measuring supply circuit of Figure F.1.

Figure K.1 – ME EQUIPMENT with an ENCLOSURE made of insulating material
(simplified Figure 15)
(see 8.7.4.7 a))

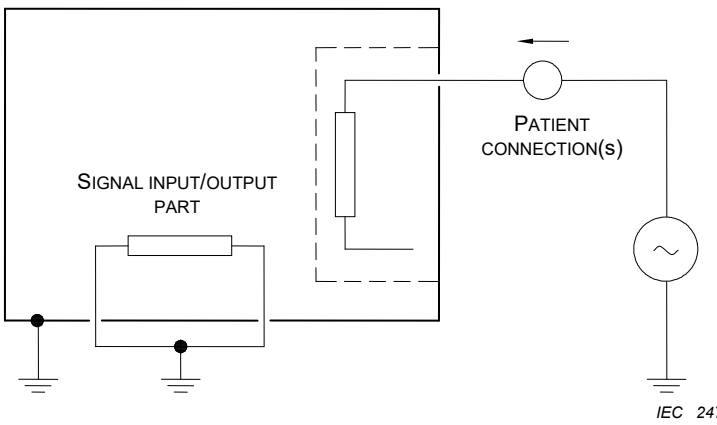

Current in μA

APPLIED PART TYPE	Special test condition
CF	50
BF	5 000
B	—

Example with the measuring supply circuit of Figure F.1.

Figure K.2 – ME EQUIPMENT with an F-TYPE APPLIED PART
(simplified Figure 16)
(see 8.7.4.7 b))

Copyright International Electrotechnical Commission
Provided by IHS Markit under license with IEC
No reproduction or networking permitted without license from IHS
Not for Resale, 08/26/2020 19:12:41 MDT

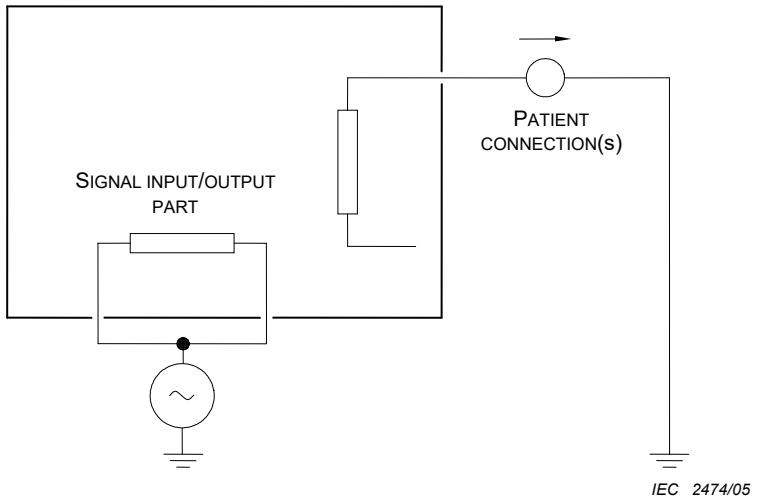

Current in μA

APPLIED PART TYPE	NORMAL CONDITION	SINGLE FAULT CONDITION
CF	10	50
BF	100	500
B	100	500

Example with the measuring supply circuit of Figure F.1.

Figure K.3 – ME EQUIPMENT with an APPLIED PART and a SIGNAL INPUT/OUTPUT PART
(simplified Figure 17)
(see 8.7.4.7 c))

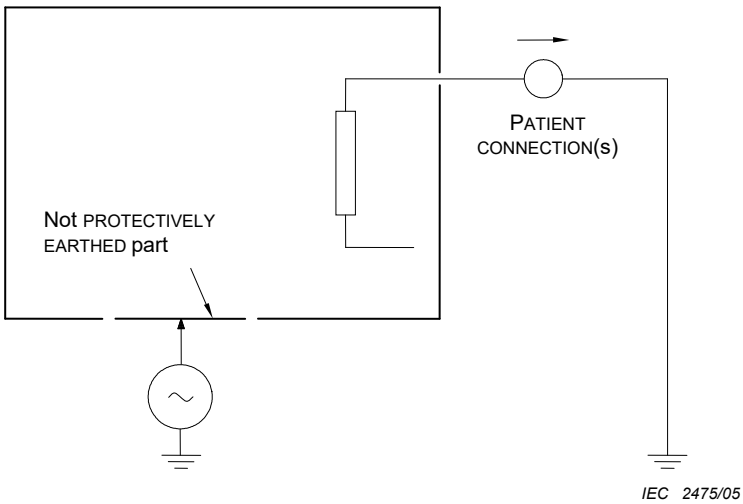

Current in μA

APPLIED PART TYPE	Special test condition
CF	—
BF	—
B	500

Example with the measuring supply circuit of Figure F.1.

Figure K.4 – ME EQUIPMENT with a PATIENT CONNECTION of a TYPE B APPLIED PART that is not PROTECTIVELY EARTHED
(simplified Figure 18)
(see 8.7.4.7 d))

Copyright International Electrotechnical Commission
Provided by IHS Markit under license with IEC
No reproduction or networking permitted without license from IHS
Not for Resale, 08/26/2020 19:12:41 MDT

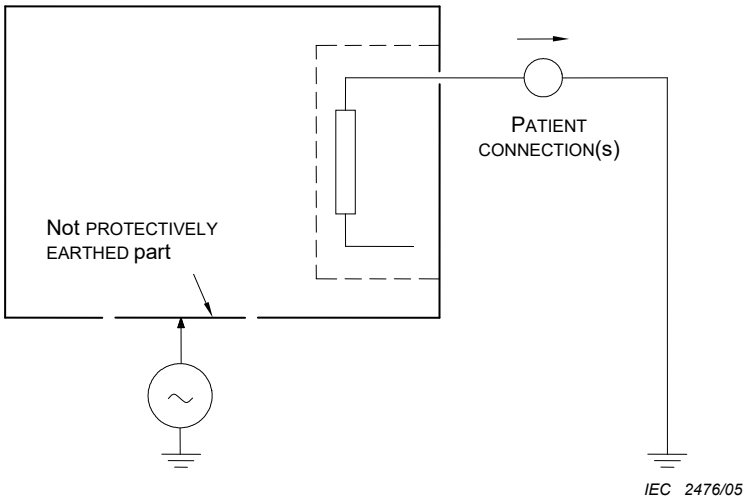

Current in μA

APPLIED PART TYPE	Special test condition
CF	—
BF	500
B	—

Example with the measuring supply circuit of Figure F.1.

Figure K.5 – ME EQUIPMENT with a PATIENT CONNECTION of a TYPE BF APPLIED PART that is not PROTECTIVELY EARTHED
(simplified Figure 18)
(see 8.7.4.7 d))

Copyright International Electrotechnical Commission
Provided by IHS Markit under license with IEC
No reproduction or networking permitted without license from IHS
Not for Resale, 08/26/2020 19:12:41 MDT

Annex L
(normative)

Insulated winding wires for use without interleaved insulation
(see 8.8.2)

L.1 Introduction

This annex specifies winding wire whose insulation may be used to provide BASIC INSULATION, SUPPLEMENTARY INSULATION, DOUBLE INSULATION or REINFORCED INSULATION in wound components without interleaved insulation.

This annex covers round winding wires having diameters between 0,05 mm and 5,00 mm.

For insulated winding wires used as MEANS OF OPERATOR PROTECTION (MOOP), an alternative test method according to IEC 62368-1:2018, G.5.3.4 is considered acceptable.

L.2 Wire construction

If the wire is insulated with two or more spirally wrapped layers of tape, the overlap of layers shall be adequate to ensure continued overlap during manufacture of the wound component. The layers of spirally wrapped wire insulation shall be sufficiently secured to maintain the amount of overlap.

L.3 TYPE TEST

The wire shall pass the tests of L.3.1 to L.3.4, carried out at a temperature between 15 °C and 35 °C and a relative humidity between 45 % and 75 %, unless specified otherwise.

L.3.1 Dielectric strength

The test sample is prepared according to IEC 60851-5:~~1996~~2008, Subclause 4.4.1 (for a twisted pair). The sample is then subjected to the test of 8.8.3 for the appropriate type and number of MOP(s). The test voltage is at least twice the appropriate voltage in Table 6 and Table 7 (see 8.8.3), with a minimum of:

– *3 000 V for BASIC INSULATION or SUPPLEMENTARY INSULATION; or*

– *6 000 V for REINFORCED INSULATION.*

L.3.2 Flexibility and adherence

The sample is subjected to test 8 of IEC 60851-3:~~1996~~2009, Subclause 5.1.1, using the mandrel diameters of Table L.1. The test sample is then examined in accordance with IEC 60851-3:~~1997~~2009, Subclause 5.1.1.4, followed by the test of 8.8.3, for the appropriate type and number of MOP(s), except that the test voltage is applied between the wire and the mandrel. The test voltage is at least the appropriate voltage in Table 6 and Table 7 (see 8.8.3) with a minimum of:

– *1 500 V for BASIC INSULATION or SUPPLEMENTARY INSULATION; or*

– *3 000 V for REINFORCED INSULATION.*

Copyright International Electrotechnical Commission
Provided by IHS Markit under license with IEC
No reproduction or networking permitted without license from IHS Not for Resale, 08/26/2020 19:12:41 MDT

Table L.1– Mandrel diameter

NOMINAL conductor diameter mm	Mandrel diameter mm ± 0,2 mm
0,05 – 0,34	4,0
0,35 – 0,49	6,0
0,50 – 0,74	8,0
0,75 – 2,49	10,0
2,50 – 5,00	four times the conductor diameter [a]
[a] In accordance with IEC 60317-43 [9].	

The tension to be applied to the wire during winding on the mandrel is calculated from the wire diameter to be equivalent to 118 MPa ± 11,8 MPa (118 N/mm² ± 11,8 N/mm²).

L.3.3 Heat shock

The sample is subjected to test 9 of IEC 60851-6:1996, followed by the dielectric strength test of 8.8.3 for the appropriate type and number of MOP(s), except that the test voltage is applied between the wire and the mandrel. The voltage is not less than the appropriate voltage in Table 6 and Table 7 (see 8.8.3) with a minimum of:

– *1 500 V for BASIC INSULATION or SUPPLEMENTARY INSULATION; or*

– *3 000 V for REINFORCED INSULATION.*

The oven temperature is the relevant temperature for the thermal class of insulation in Table L.2.

The mandrel diameter and tension applied to the wire during winding on the mandrel are as in L.3.2.

The electric strength test is conducted at room temperature after removal from the oven.

Table L.2 – Oven temperature

Thermal class	A (105)	E (120)	B (130)	F (155)	H (180)
Oven temperature °C ± 5 °C	200	215	225	240	260

L.3.4 Retention of electric strength after bending

Five samples are prepared as in L.3.2 above and tested as follows. Each sample is removed from the mandrel, placed in a container and positioned so that it can be surrounded by at least 5 mm of metal shot. The ends of the conductor in the sample are to be sufficiently long to avoid flash over. The shot is to be not more than 2 mm in diameter and consists of balls of stainless steel, nickel or nickel plated iron. The shot is gently poured into the container until the sample under test is covered by at least 5 mm of shot. The shot is cleaned periodically with a suitable solvent (for example, 1,1,1-trichloroethane).

NOTE The above test PROCEDURE is reproduced from 4.6.1.c) of IEC 60851-5:1988 (second edition including amendment 1), now withdrawn. It is not included in the ~~third~~ fourth edition of that standard.

--`,,`,,`-`-`,,`,,`,`,,`---

Copyright International Electrotechnical Commission
Provided by IHS Markit under license with IEC
No reproduction or networking permitted without license from IHS Not for Resale, 08/26/2020 19:12:41 MDT

The test voltage is at least the appropriate test voltage in Table 6 and Table 7 (see 8.8.3) for the appropriate type and number of MOP(s), with a minimum of:

– *1 500 V for BASIC INSULATION or SUPPLEMENTARY INSULATION; or*

– *3 000 V for REINFORCED INSULATION.*

The test voltage is applied between the shot and the conductor.

The mandrel diameter and tension applied to the wire during winding on the mandrel are as in L.3.2.

L.4 Tests during manufacture

L.4.1 General

The wire is subjected by the wire manufacturer to electric strength tests during manufacture as specified in L.4.2 and L.4.3.

L.4.2 Routine testing

The test voltage for routine testing is to be the appropriate voltage in Table 6 and Table 7 (see 8.8.3) for the appropriate type and number of MOP(s), with a minimum of:

– *1 500 V r.m.s. or 2 100 V peak for BASIC INSULATION or SUPPLEMENTARY INSULATION; or*

– *3 000 V r.m.s. or 4 200 V peak for REINFORCED INSULATION.*

L.4.3 Sampling tests

Twisted pair samples are tested in accordance with IEC 60851-5:~~1996~~2008, Subclause 4.4.1. The minimum breakdown voltage is twice the appropriate voltage in Table 6 and Table 7 (see 8.8.3) for the appropriate type and number of MOP(s),with a minimum of:

– *3 000 V r.m.s. or 4 200 V peak for BASIC INSULATION or SUPPLEMENTARY INSULATION; or*

– *6 000 V r.m.s. or 8 400 V peak for REINFORCED INSULATION.*

Copyright International Electrotechnical Commission
Provided by IHS Markit under license with IEC
No reproduction or networking permitted without license from IHS Not for Resale, 08/26/2020 19:12:41 MDT

Annex M
(normative)

Reduction of pollution degrees
(see 8.9.1.8)

Table M.1 shows additional protective measures that may be used to reduce the pollution degree.

Table M.1 – Reduction of the pollution degree of internal environment through the use of additional protection

Additional protection	From pollution degree 2 of external environment to:	From pollution degree 3 of external environment to:
ENCLOSURE IPX4 of IEC 60529	2	2
ENCLOSURE IPX5 or IPX6 of IEC 60529	2	2
ENCLOSURE IPX7 or IPX8 of IEC 60529	2 (see note)	2 (see note)
Hermetically sealed ENCLOSURE	1	1
Constantly heated	1	1
Encapsulated	1	1
Coated	1	2
NOTE Reduction can be to pollution degree 1, if the equipment is manufactured with a low internal humidity and the manufacturer's instructions specify that, after opening the ENCLOSURE, the ENCLOSURE is reassembled in a controlled humidity environment or a desiccant is used.		

Copyright International Electrotechnical Commission
Provided by IHS Markit under license with IEC
No reproduction or networking permitted without license from IHS
Not for Resale, 08/26/2020 19:12:41 MDT

Bibliography

[1] IEC 60050-151:2001, *International Electrotechnical Vocabulary (IEV) – Part 151: Electrical and magnetic devices*

[2] IEC 60050-195:1998, *International Electrotechnical Vocabulary (IEV) – Part 195: Earthing and protection against electric shock*

Amendment 1 (2001)

[3] IEC 60050-441:2001, *International Electrotechnical Vocabulary (IEV) – Chapter 441: Switchgear, controlgear and fuses*

[4] IEC 60050-826:2004, *International Electrotechnical Vocabulary (IEV) – Part 826: Electrical installations*

[5] IEC 60073, *Basic and safety principles for man-machine interface, marking and identification – Coding principles for indication devices and actuators*

[6] IEC 60086-1, *Primary batteries - Part 1: General*

[7] IEC 60127-6, *Miniature fuses – Part 6: Fuse holders for miniature fuse links*

[8] IEC 60309-1, *Plugs, socket-outlets and couplers for industrial purposes – Part 1: General requirements*

[9] IEC 60317-43, *Specifications for particular types of winding wires – Part 43:Aromatic polyimide tape wrapped round copper wire, class 240*

[10] IEC 60364-7-710, *Electrical installations of buildings – Part 7-710: Requirements for special installations or locations – Medical locations*

[11] ~~IEC 60479-1:1994, *Effects of current on human beings and livestock – Part 1: General aspects*~~ Void

[12] IEC 60513:1994, *Fundamental aspects of safety standards for medical electrical equipment*

[13] IEC 60601-1-1:2000, *Medical electrical equipment – Part 1-1: General requirements for safety – Collateral standard: Safety requirements for medical electrical systems*

[14] IEC 60601-1-4:1996, *Medical electrical equipment – Part 1: General requirements for safety – 4. Collateral standard: Programmable electrical medical systems*
Amendment 1 (1999)[23)]

[15] IEC 60601-2-4, *Medical electrical equipment – Part 2-4: Particular requirements for the safety of cardiac defibrillators*

[16] IEC 60601-2-49:2001, *Medical electrical equipment – Part 2-49: Particular requirements for the safety of multifunction patient monitoring equipment*

[17] IEC 60695-1-10, *Fire hazard testing – Part 1-10: Guidance for assessing the fire hazard of electrotechnical products – General guidelines*

[18] IEC 60721 (all parts), *Classification of environmental conditions*

[19] IEC 60788:2004, *Medical electrical equipment – Glossary of defined terms*

23) There exists a consolidated edition 1.1 (2000) including IEC 60601-1-4 (1996) and its Amendment 1 (1999).

Copyright International Electrotechnical Commission
Provided by IHS Markit under license with IEC
No reproduction or networking permitted without license from IHS Not for Resale, 08/26/2020 19:12:41 MDT

[20] IEC 60990, *Methods of measurement of touch current and protective conductor current*

[21] IEC 61000-4-11, *Electromagnetic compatibility (EMC) – Part 4-11: Testing and measurement techniques – Voltage dips, short interruptions and voltage variations immunity tests*

[22] IEC 61010-1:~~2001~~2010, *Safety requirements for electrical equipment for measurement, control, and laboratory use – Part 1: General requirements*

[23] IEC 61140:2001, *Protection against electric shock – Common aspects for installation and equipment*

[24] IEC 61258, *Guidelines for the development and use of medical electrical equipment educational materials*

[25] IEC 62079:2001, *Preparation of instructions – Structuring, content and preparation*

[26] ~~IEC 62304, *Medical device software – Software life-cycle processes* [24)]~~
IEC 80001-1:2010, *Application of risk management for IT-networks incorporating medical devices – Part 1: Roles, responsibilities and activities*

[27] ISO 407, *Small medical gas cylinders – Pin-index yoke-type valve connections*

[28] ISO 5805, *Mechanical vibration and shock – Human exposure – Vocabulary*

[29] ISO 8041, *Human response to vibration – Measuring instrumentation*

[30] ISO 13485, *Medical devices – Quality management systems – Requirements for regulatory purposes*

[31] ISO 14708-1, *Implants for surgery – Active implantable medical devices – General requirements for safety, marking and for information to be provided by the manufacturer*

[32] IEV-DB:2002, *International Electrotechnical Vocabulary*

[33] ISO/IEC Guide 51:1999, *Safety aspects – Guidelines for their inclusion in standards*

[34] ACGIH Threshold Limit Values and Biological Exposure Indices (2000 handbook)
ISBN: 1-882417-36-4

[35] ASTM STP 1262, *Environmental Toxicology and Risk Assessment, 4th Volume*, Editor(s): T.W. La Point, F. T. Price, E.E. Little, Published 1996, ISBN:0-8031-1998-4

[36] ASTM STP 1267, *Flammability and Sensitivity of Materials in Oxygen-Enriched Atmospheres:7th Volume*, Editor(s): Janoff/Royals/Gunaji, Published 1996, ISBN:0-8031-2004-4

[37] ASTM STP 1395, *Flammability and Sensitivity of Materials in Oxygen-Enriched Atmospheres*, Ninth Volume, Editor(s): T.A. Steinberg; B.E. Newton; H.D. Beeson, Published 2000, ISBN:0-8031-2871-1

[38] EN 563, *Safety of machinery – Temperatures of touchable surfaces – Ergonomic data to establish temperature limit values for hot surfaces*

[39] ICRP Publication 60:1990 *Recommendations of the International Commission on Radiological Protection*, Annals of the ICRP Volume 21/1-3, International Commission on Radiological Protection, 1992

~~[24)] To be published.~~

Copyright International Electrotechnical Commission
Provided by IHS Markit under license with IEC
No reproduction or networking permitted without license from IHS
Not for Resale, 08/26/2020 19:12:41 MDT

[40] MIL-HDBK-217:1995, *Reliability prediction of electronic equipment*

[41] NFPA 53:1999, *Recommended practice on materials, equipment and systems used in oxygen-enriched atmospheres*

[42] NFPA 99:2002, *Standard for Health Care Facilities*

[43] UL 1439:1998, *Test for sharpness of edges on equipment*

[44] UL 2601-1:1997, *Medical Electrical Equipment, Part 1: General Requirements for Safety*

[45] DALZIEL, CF., LEE, WR., Re-evaluation of lethal electric currents. *IEEE Transactions on Industry and General Applications*, September/October 1968, Vol. 1 GA–4, No. 5

[46] DOLAN, AM., HORACEK, BM., RAUTAHARAJU, PM., *Medical Instrumentation* (abstract), January 12, 1953, 1978

[47] GREEN, HL., *Electrical Safety Symposium Report*. Department of Health and Social Security, United Kingdom, October 1975

[48] KEESEY, JC. and LETCHER, FS., Human thresholds of electric shock at power transmission frequencies. *Arch. Environ. Health*, October 1970, Vol. 21

[49] ROY, OZ., 60 Hz Ventricular fibrillation and rhythm thresholds and the non-pacing intracardiac catheter. *Medical and Biological Engineering*, March 1975

[50] RAFFERTY, E B., GREEN, HL., YACOUB, MH., Disturbances of heart rhythm produced by 50 Hz leakage currents in human subjects. *Cardiovascular Research*, March 1975, Vol. 9, No. 2, pp. 263-265

[51] SANDERS, MS. and McCORMICK, EJ., *Human Factors In Engineering and Design,"* 7th Ed., McGraw-Hill, Inc., ISBN 0-07-054901-X

[52] SCHWARTZ, SI., SHIRES, GT., SPENCER, FC., STORER, EH., *Principles of Surgery,* 7th Ed., McGraw-Hill, Inc., ISBN 0-07-054256-2

[53] STARMER, CF. and WHALEN, RE., Current density and electrically induced ventricular fibrillation. *Medical Instrumentation*, January-February 1973, Vol. 7, No. 1.

[54] WATSON, AB. and WRIGHT, JS., Electrical thresholds for ventricular fibrillation in man. *Medical Journal of Australia*, June 16, 1973

[55] IEC 60332-1-2, Tests on electric and optical fibre cables under fire conditions Part 1-2: Test for vertical flame propagation for a single insulated wire or cable – Procedure for 1 kW pre-mixed flame

[56] IEC 60332-2-2, Tests on electric and optical fibre cables under fire conditions Part 2-2: Test for vertical flame propagation for a single small insulated wire or cable – Procedure for diffusion flame

[57] IEC 60601-1-11, Medical electrical equipment – Part 1-11: General requirements for basic safety and essential performance – Collateral Standard: Requirements for medical electrical equipment and medical electrical systems used in the home healthcare environment

[58] IEC 60601-1-12, Medical electrical equipment – Part 1-12: General requirements for basic safety and essential performance – Collateral Standard: Requirements for medical electrical equipment and medical electrical systems used in the emergency medical services environment

Copyright International Electrotechnical Commission
Provided by IHS Markit under license with IEC
No reproduction or networking permitted without license from IHS Not for Resale, 08/26/2020 19:12:41 MDT

[59] IEC 60601-2-22, Medical electrical equipment – Part 2-22: Particular requirements for basic safety and essential performance of surgical, cosmetic, therapeutic and diagnostic laser equipment

[60] IEC 60878, Graphical symbols for electrical equipment in medical practice

[61] IEC 61010 (all parts), Safety requirements for electrical equipment for measurement, control, and laboratory use

[62] IEC 61558-1, Safety of power transformers, power supplies, reactors and similar products – Part 1: General requirements and tests

[63] IEC 61558-2-4, Safety of transformers, reactors, power supply units and similar products for supply voltages up to 1 100 V – Part 2-4: Particular requirements and tests for isolating transformers and power supply units incorporating isolating transformers

[64] IEC 61558-2-23, Safety of transformers, reactors, power supply units and combinations thereof – Part 2-23: Particular requirements and tests for transformers and power supply units for construction sites

[65] IEC 62353, Medical electrical equipment – Recurrent test and test after repair of medical electrical equipment

[66] IEC/TR 62354, General testing procedures for medical electrical equipment

[67] IEC 62471:2006, Photobiological safety of lamps and lamp systems

[68] ISO 7396-1, Medical gas pipeline systems – Part 1: Pipeline systems for compressed medical gases and vacuum

[69] ISO 14708 (all parts), Implants for surgery – Active implantable medical devices

[70] ISO 15001, Anaesthetic and respiratory equipment – Compatibility with oxygen

[71] ANSI/AAMI HE-75:2009, Human Factors Engineering – Design of Medical Devices

[72] UL 2556:2007, UL Standard for Safety Wire and Cable Test Methods

[73] IEC 60479-1:2018, *Effects of current on human beings and livestock – Part 1: General aspects*

[74] IEC 60601-1:1988, *Medical electrical equipment – Part 1: General requirements for safety*
Amendment 1:1991
Amendment 2:1995

[75] IEC 60601-2-57, *Medical electrical equipment – Part 2-57: Particular requirements for the basic safety and essential performance of non-laser light source equipment intended for therapeutic, diagnostic, monitoring and cosmetic/aesthetic use*

[76] IEC 62366-1:2015, *Medical devices – Part 1: Application of usability engineering to medical devices*

Copyright International Electrotechnical Commission
Provided by IHS Markit under license with IEC
No reproduction or networking permitted without license from IHS
Not for Resale, 08/26/2020 19:12:41 MDT

[77] IEC TR 62368-2:2019, *Audio/video, information and communication technology equipment – Part 2: Explanatory information related to IEC 62368-1:2018*

[78] ISO 2409, *Paints and varnishes – Cross-cut test*

[79] ISO 4624, *Paints and varnishes – Pull-off test for adhesion*

[80] ISO 10524-1:2018, *Pressure regulators for use with medical gases – Part 1: Pressure regulators and pressure regulators with flow-metering devices*

[81] ISO 13732-1:2006, *Ergonomics of the thermal environment – Methods for the assessment of human responses to contact with surfaces – Part 1: Hot surfaces*

[82] UL 746C, *Standard for Polymeric Materials – Use in Electrical Equipment Evaluations*

Copyright International Electrotechnical Commission
Provided by IHS Markit under license with IEC
No reproduction or networking permitted without license from IHS
Not for Resale, 08/26/2020 19:12:41 MDT

INDEX OF ABBREVIATIONS AND ACRONYMS

Abbreviation	Term
a.c.	Alternating current
AEL	Accessible emission limit
AMSO	Auxiliary mains socket-outlet
AP	Anaesthetic-proof
APG	Anaesthetic-proof category G (gas)
CASE	Computer aided software engineering
CAT	Computer assisted tomography
CRT	Cathode ray tube
CTI	Comparative tracking index
d.c.	Direct current
DICOM	Digital imaging and communication in medicine
ELV	Extra-low voltage
EUT	Equipment under test
FDDI	Fibre distributed data interface
FEP	Fluorinated ethylene propylene
FMEA	Failure modes and effects analysis
~~FV~~	~~Flammability classification according to IEC 60695-11-10~~
HL7	Health Level 7
IBP	Invasive blood pressure catheter
ICRP	International commission for radiation protection
IEV	International Electrotechnical Vocabulary
IP	International protection in relation to the protection requirements of IEC 60529 or Internet protocol in relation to NETWORK/DATA COUPLING
IPS	Isolated power supply
IT	Information technology
KPaG	Kilopascal Gauge
LDAP	Light weight directory access protocol
LED	Light emitting diode
MAR	Minimum angle resolvable
MD	Measuring device, see 8.7.4.4
ME	MEDICAL ELECTRICAL, see 3.63 and 3.64
MOOP	MEANS OF OPERATOR PROTECTION, see 3.58
MOP	MEANS OF PROTECTION, see 3.60
MOPP	MEANS OF PATIENT PROTECTION, see 3.59
MPSO	Multiple portable socket-outlet
MSO	MULTIPLE SOCKET-OUTLET, see 3.67
OTS	Off the shelf
PEMS	PROGRAMMABLE ELECTRICAL MEDICAL SYSTEM, see 3.90
PESS	PROGRAMMABLE ELECTRONIC SUBSYSTEM, see 3.91
PTC	Positive temperature coefficient device

Copyright International Electrotechnical Commission
Provided by IHS Markit under license with IEC
No reproduction or networking permitted without license from IHS
Not for Resale, 08/26/2020 19:12:41 MDT

Abbreviation	Term
PTFE	Polytetrafluoroethylene
PVC	Polyvinyl chloride
RFID	Radio-frequency identification
r.m.s.	Root mean square
SAR	Specific absorption rate
SELV	Safety extra-low voltage
SI	System international
SIP/SOP	SIGNAL INPUT/OUTPUT PART, see 3.115.
TCP	Transport connection protocol
TENS	Transcutaneous electronic nerve stimulator
TFE	Tetrafluoroethylene
UPS	Uninterruptible power supply
VDU	Video display unit
V-x	Flammability classification according to IEC 60695-11-10

--`,,```,,,,````-`-`,,`,,`,`,,`---

Copyright International Electrotechnical Commission
Provided by IHS Markit under license with IEC
No reproduction or networking permitted without license from IHS Not for Resale, 08/26/2020 19:12:41 MDT

INDEX

Abnormal condition, 40, 41
ACCESS COVER, 56, 81, 83, 84, 148, 154
  Definition, 24
ACCESSIBLE PART, 240
ACCESSIBLE PART, 28, 79, 81, 87, 88, 104, 151, 241, 242, 251, 262, 269, 270, 274
  Actuating mechanisms, 59
  Defibrillation protection, 285
  Definition, 24
  Determination of, 56, 79, 261, 271, 351
  Fuse-holder, 64
  Internal screens and internal wiring, 100, 289
  LEAKAGE CURRENTS, 81, 272
  MAXIMUM MAINS VOLTAGE on, 272
  MEANS OF PROTECTION, 84, 274
  Metal, 88, 121, 148, 287, 298
  Moving, 199
  of ENCLOSURES, 233
  TOUCH CURRENT, 273
  Voltage limits for, 198
ACCESSORY, 55, 62, 96, 162, 173, 246, 264, 310, 324
  ACCOMPANYING DOCUMENTS definition, 24
  Biocompatibility, 194
  Cleaning, 76, 193
  Definition, 24
  Definition of HAND-HELD, 31
  Definition of PORTABLE, 36
  Disposal, 77
  List of, 76
  ME EQUIPMENT definition, 34
  Means of attachment, 171
  Method of sterilization, 65
  Minimum marking, 61
  MODEL OR TYPE REFERENCE definition, 34
  Multiple cleanings/disinfections, 193
  Operating instructions, 75
  Other power source, 64
  Pneumatic and hydraulic parts, 168
  Single use, 61
  Start-up PROCEDURE, 75
  Sterile, 65, 77
  Sterilization, 193
ACCOMPANYING DOCUMENT, 37, 55, 56, 61, 63, 66, 67, 72, 73, 79, 80, 100, 155, 162, 164, 166, 167, 171, 173, 176, 191, 208, 210, 223, 225, 229, 255, 256, 262, 267, 269, 286, 298, 310, 356, 374
  COMPONENT WITH HIGH-INTEGRITY CHARACTERISITCS, 241
  Consult, 264, 358
  Defibrillation voltage and any recovery time, 91
  Definition, 24
  Inspection, 53, 73, 80, 166, 173, 177, 212, 217
  Instructions for use, 72, 357
  ME SYSTEM, 223, 346
  Mechanism for isolating the SUPPLY MAINS, 149
  MODEL OR TYPE REFERENCE, 246
  Recovery time, 96
  SAFE WORKING LOAD, 175
  Surface temperature, 231
  Technical description, 72, 357
  Working conditions, 54
Active implantable medical device, 18, 34
AIR CLEARANCE, 33, 79, 82, 84, 87, 88, 89, 91, 128, 130, 131, 132, 133, 135, 136, 137, 138, 139, 140, 141, 149, 152, 153, 164, 165, 174, 175, 183, 209, 224, 227, 245, 249, 250, 259, 271, 275, 301, 302, 304, 306, 307, 312, 322, 331, 352, 375
  Complying with IEC 60950-1, 129, 275
  DEFIBRILLATION-PROOF APPLIED PARTS, 133, 306
  Definition, 24
  High altitude, 130
  Interpolation, 130, 306
  MEANS OF OPERATOR PROTECTION, 86
  MEANS OF PATIENT PROTECTION, 85
  Short circuit of, 79
  Transformer, 221
  Values, 129
AIR KERMA
  Definition, 43
ALARM CONDITION, 43, 256
  Definition, 43
ALARM SIGNAL, 43, 49, 242, 256
  Definition, 43
ALARM SYSTEM, 43, 194, 256
  Definition, 43
Ambient humidity, 54, 65, 212, 268, 413
Ambient illuminance, 60
Ambient pressure, 35, 54, 248, 268
Ambient temperature, 28, 54, 128, 181, 183, 219, 268, 324, 344, 376, 380, 381
APPLIANCE COUPLER, 25, 29, 32, 75, 150, 151, 308
  Definition, 25
APPLIANCE INLET, 25, 32, 66, 98, 99, 119, 141, 154, 162
  Definition, 25
APPLIED PART, 24, 29, 30, 34, 36, 40, 41, 42, 50, 59, 64, 79, 80, 87, 88, 90, 91, 95, 96, 101, 103, 104, 119, 121, 122, 181, 182, 193, 198, 225, 233, 237, 238, 239, 257, 269, 272, 286, 287, 293, 303, 332, 347, 401, 410, 411
  Classification, 59, 80
  Cold, 181
  Definition, 25
  Determination of, 56, 351
  DIRECT CARDIAC APPLICATION, 80, 241
  DIRECT CARDIAC APPLICATION, 29
  HAND-HELD, 340
  High altitude, 325
  Intended to supply heat, 181
  Marking of, 64
  Maximum surface temperature, 324
  Maximum temperature, 196

Copyright International Electrotechnical Commission
Provided by IHS Markit under license with IEC
No reproduction or networking permitted without license from IHS
Not for Resale, 08/26/2020 19:12:41 MDT

MEANS OF PROTECTION, 84
Moving, 199
Multiple, 88, 282
Not intended to supply heat, 181, 324
Specified in the instructions for use, 75
Temperature, 181
BASIC INSULATION, 28, 29, 40, 123, 222, 227, 240, 241, 242, 245, 250, 258, 272, 274, 288, 299, 301, 303, 348, 413, 414, 415
Definition, 25
MEANS OF PROTECTION, 270
BASIC SAFETY, 18, 24, 29, 49, 54, 80, 96, 164, 174, 175, 192, 193, 194, 203, 204, 205, 206, 208, 209, 229, 231, 232, 240, 241, 246, 251, 253, 258, 259, 260, 261, 262, 264, 268, 270, 274, 286, 312, 321, 322, 323, 334, 344, 346, 347, 349
Defibrillation protection, 91
Definition, 28
Flow rate, 65
Loss of, 226
Testing, 78
Batch or lot identifier
ACCESSORY, 62
ME EQUIPMENT, 61
Biocompatibility, 194, 251, 340, 351
BODY-WORN, 91
Definition, 44
Equipment, 41
CATEGORY AP, 191, 328, 350, 354, 355, 356, 372, 373, 374, 375, 376
Definition, 28
Symbol, 362
CATEGORY APG, 191, 328, 350, 354, 355, 356, 373, 374, 375, 381
Definition, 28
Symbol, 362
CLASS I, 37, 59, 74, 120, 154, 224, 227, 258, 267, 272, 287, 294, 296, 308, 348
Definition, 28
CLASS II, 28, 59, 63, 100, 120, 154, 242, 289, 296, 356, 360, 405
Definition, 28
Class III, 262
CLEARLY LEGIBLE, 60, 65, 67, 163, 263
Definition, 28
COLD CONDITION, 199, 353
Definition, 28
Comparative tracking index, 131
COMPONENT WITH HIGH-INTEGRITY CHARACTERISTICS, 50, 51, 52, 79, 197, 205, 218, 241, 259, 337
Definition, 28
CONTINUOUS OPERATION, 59, 64, 183, 202, 225, 241, 262, 333, 381
Definition, 28
DUTY CYCLE, 241
Non-, 59, 64, 182, 201, 203, 225, 241, 262, 333
CREEPAGE DISTANCE, 33, 79, 82, 84, 87, 88, 89, 91, 124, 128, 130, 134, 138, 139, 140, 141, 149, 152, 153, 164, 165, 174, 175, 183, 209, 224, 227, 245, 249, 259, 271, 275, 283, 301, 302, 304, 306, 307, 312, 322, 331, 342, 352, 375
Complying with IEC 60950-1, 129, 275
DEFIBRILLATION-PROOF APPLIED PARTS, 133, 306
Definition, 29
High altitude, 130
Interpolation, 130, 306
MEANS OF OPERATOR PROTECTION, 86, 133
MEANS OF PATIENT PROTECTION, 85
Moulded transformer, 222
Short circuit of, 79
SINGLE FAULT CONDITION, 260
Transformer, 221
Values, 129
WORKING VOLTAGE above 1 000 V, 304
Date of manufacture
ACCESSORY, 62
ME EQUIPMENT, 61
DEFIBRILLATION-PROOF APPLIED PART, 91, 241, 264, 285, 287
Classification, 59, 88, 90
Common-mode test, 91
CREEPAGE DISTANCES and AIR CLEARANCES, 133
Definition, 29
Differential-mode test, 95
Energy reduction test, 96
Marking of, 64
WORKING VOLTAGE, 90, 285
Design documentation
Evaluation of, 197
Inspection, 128, 213
DETACHABLE POWER SUPPLY CORD, 98, 119, 162, 241, 283, 288, 375
Definition, 29
Non-, 78, 98, 152, 308
Diagnostic or therapeutic radiation, 195, 196
DIRECT CARDIAC APPLICATION, 42, 80, 241, 251, 273, 290, 346
Definition, 29
DOUBLE INSULATION, 28, 51, 79, 90, 241, 258, 271, 274, 277, 301, 303, 309, 413
Definition, 29
MEANS OF PROTECTION, 29, 270
Short circuiting, 101, 289
WORKING VOLTAGE, 285
DUTY CYCLE, 71, 182, 201, 241, 324
Definition, 29
Marking of, 64
EARTH LEAKAGE CURRENT, 32, 101, 103, 120, 247, 291, 405
Definition, 29
Measurement, 104, 120, 297
MULTIPLE SOCKET-OUTLET, 347
Total, 225
Value, 101
Value for a MULTIPLE SOCKET-OUTLET, 225
Electrical equipment, 74, 79, 80, 118, 231, 262, 345
ACCESS COVER definition, 24
ACCESSIBLE PART definition, 24
APPLIANCE COUPLER definition, 25
APPLIANCE INLET definition, 25
CLASS II definition, 28
COLD CONDITION definition, 28
DETACHABLE POWER SUPPLY CORD definition, 29

Copyright International Electrotechnical Commission
Provided by IHS Markit under license with IEC
No reproduction or networking permitted without license from IHS
Not for Resale, 08/26/2020 19:12:41 MDT

INTERNAL ELECTRICAL POWER SOURCE definition, 32
INTERNALLY POWERED definition, 32
MAINS CONNECTOR definition, 32
MAINS PLUG definition, 32
MAINS TRANSIENT VOLTAGE definition, 32
ME EQUIPMENT definition, 34
PEAK WORKING VOLTAGE definition, 36
POTENTIAL EQUALIZATION CONDUCTOR definition, 36
POWER SUPPLY CORD definition, 37
SELF-RESETTING THERMAL CUT-OUT definition, 39
SIGNAL INPUT/OUTPUT PART definition, 40
TERMINAL DEVICE definition, 40
THERMAL CUT-OUT definition, 41
WORKING VOLTAGE definition, 43
ENCLOSURE, 32, 41, 83, 88, 90, 91, 101, 118, 120, 121, 123, 125, 141, 150, 156, 188, 233, 241, 251, 270, 271, 272, 286, 291, 301, 303, 310, 314, 347, 350, 372, 373, 375, 376, 380, 381, 401
ACCESS COVER, 24, 262
ACCESSIBLE PART, 233
Ball-pressure test, 128
Definition, 29
Deformation of, 196
Fire, 184, 189, 197, 312, 328, 331, 354
Greater than IPX0, 56
HAND HELD switches and footswitches, 307
HIGH VOLTAGE parts, 265
Impact, 210, 341
Impairment of cooling, 199
IP Classification, 59, 64, 193, 217, 232, 261, 329
IPX0, 56
Main, 120, 289
ME SYSTEM, 224, 345
Minimum marking, 61
Moulded, 212
MULTIPLE SOCKET-OUTLET, 227
Non-conductive, 118
Opening in, 82, 375
Rigidity, 209, 210, 340
Separate, 79
TOUCH CURRENT, 41, 297
Equipment, 62, 64, 75, 76, 222, 223, 224, 226, 227, 228, 233, 246, 247, 250, 259, 262, 303, 308, 310, 311, 321, 340, 343, 345, 346, 347, 348, 395, 401
ACCESSORY definition, 24
ACCOMPANYING DOCUMENTS definition, 24
BODY-WORN, 41
Class III, 262
GUARD definition, 30
HAND-HELD definition, 31
IT-NETWORK, 208
MAINS SUPPLY TRANSFORMER definition, 32
ME SYSTEM definition, 34
MOBILE, 41, 313
MOBILE definition, 34
MODEL OR TYPE REFERENCE definition, 34
NETWORK/DATA COUPLING definition, 34
PERMANENTLY INSTALLED, 366
Polyphase, 284
PORTABLE, 41
PROTECTIVE EARTH TERMINAL definition, 37
SAFE WORKING LOAD definition, 39
Separate power supply, 55
SERVICE PERSONNEL definition, 39
STATIONARY definition, 40
TRANSPORTABLE definition, 36, 41
TRAPPING ZONE definition, 41
TYPE TEST definition, 42
ESSENTIAL PERFORMANCE, 241
ESSENTIAL PERFORMANCE, 18, 24, 29, 49, 54, 96, 164, 174, 175, 192, 203, 204, 205, 206, 208, 213, 229, 231, 232, 240, 241, 246, 253, 254, 259, 260, 264, 265, 286, 312, 313, 321, 334, 336, 337, 349, 351
d.c. SUPPLY MAINS, 80
Defibrillation protection, 91
Definition, 29
Disclosure of, 78
Flow rate, 65
Information about, 78
Testing, 78
VERIFICATION, 206, 339
EXPECTED SERVICE LIFE, 28, 40, 49, 51, 52, 59, 60, 73, 79, 98, 128, 172, 177, 178, 193, 212, 256, 257, 258, 259, 288, 300, 318
Definition, 29
Disposal, 77
Faults, 261
Simultaneous independent, 54, 261
Fire, 66, 155, 184, 187, 188, 189, 191, 215, 229, 273, 308, 317, 326, 327, 328, 331, 332, 345, 354
FIXED
APPLIANCE INLET, 25
Connections, 288
Definition, 30
GUARD, 156
Installations, 247
Mains socket-outlets, 247
ME EQUIPMENT, 60, 120, 161, 163, 189, 209, 341
POWER SUPPLY CORD, 37
PROTECTIVE EARTH CONDUCTOR, 98
Supply conductors, 98
SUPPLY MAINS, 30
Terminals, 153
Wiring, 154
FLAMMABLE ANAESTHETIC MIXTURE WITH AIR, 28, 329, 373, 380
Definition, 30
FLAMMABLE ANAESTHETIC MIXTURE WITH OXYGEN OR NITROUS OXIDE, 28, 373, 374, 375, 381, 385, 386
Definition, 30
Flammable anaesthetic mixtures, 230, 350, 372
F-TYPE APPLIED PART, 36, 42, 88, 90, 121, 235, 282, 283, 292, 303
Classification, 30
Definition, 30
F-TYPE ISOLATED (FLOATING) APPLIED PART. See F-TYPE APPLIED PART
Function, 24, 25, 28, 60, 65, 68, 72, 73, 75, 78, 88, 100, 122, 124, 155, 176, 177, 187, 194, 198, 205, 206, 213, 214, 216, 226, 229, 234, 236, 237, 238, 239, 241, 242, 248, 259,

Copyright International Electrotechnical Commission
Provided by IHS Markit under license with IEC
No reproduction or networking permitted without license from IHS
Not for Resale, 08/26/2020 19:12:41 MDT

272, 282, 286, 288, 293, 295, 298, 299, 311, 337, 339, 340, 355, 356, 357, 388, 395, 399
FUNCTIONAL CONNECTION, 34, 224, 242
Definition, 30
FUNCTIONAL EARTH CONDUCTOR, 28, 71, 289, 296
Definition, 30
LEAKAGE CURRENT
Value, 102
FUNCTIONAL EARTH TERMINAL, 28, 30, 96, 100, 118, 242
Definition, 30
Marking of, 65, 67
Functional test
ESSENTIAL PERFORMANCE, 49
Speed of movement, 159, 175
Strength of PATIENT or OPERATOR support or suspension systems, 173
Fuseholder, 56, 81, 262
GUARD, 156, 310
ACCESS COVER, 24
Definition, 30
FIXED, 156
Hot or cold accessible surfaces, 183
Movable, 158
TRAPPING ZONE, 156
HAND-HELD, 44
ACCESSORY, 210
APPLIED PART, 340
Control device, 148, 217
Definition, 31
ME EQUIPMENT, 53, 161, 182, 199, 203, 209, 210, 341
Part, 148, 162, 210
Switches and footswitches, 307
HARM, 256
HARM, 31, 38, 65, 158, 160, 164, 174, 175, 209, 241, 242, 243, 254, 255, 258, 286, 309, 312, 314, 316, 317, 321, 324, 332
Definition, 31
HAZARD, 18, 28, 31, 33, 35, 38, 40, 41, 46, 47, 48, 65, 66, 78, 155, 159, 160, 161, 166, 171, 205, 213, 214, 222, 225, 229, 230, 233, 240, 243, 245, 246, 248, 253, 254, 255, 258, 259, 260, 261, 263, 265, 268, 269, 283, 284, 291, 293, 306, 307, 308, 309, 310, 311, 316, 317, 318, 327, 329, 330, 331, 336, 337, 340, 342, 343, 345, 346, 347, 351, 355, 357, 375, 395, 396, 401
Definition, 31
Excessive temperatures, 179, 323
Expelled parts, 155, 166, 314, 353
Impairment of cooling, 199
Instability, 161, 312, 352
Moving parts, 352
Rough surfaces, corners and edges, 161, 312, 352
Support systems, 171, 317, 353
Temperature of APPLIED PARTS, 324
Unwanted and excessive radiation, 177, 322
HAZARDOUS SITUATION, 43, 46, 47, 48, 51, 54, 79, 80, 104, 155, 188, 196, 198, 215, 243, 253, 254, 255, 283, 308, 328, 331, 334, 347, 348, 353, 396
Adjustment of controls, 216
Battery replacement, 214
Conditions or faults, 47
Damage during assembly, 148
Damage to insulation, 148
Definition, 31
Detachment of conductors and connectors, 79, 147, 148
Exhaustion of a battery, 342
Failure of any one component at a time, 196
Failure of components, 51
Heaters, 215
Incorrect connection, 226
Ingress of water and particulate matter, 193, 329
Interruption of SUPPLY MAINS, 194
Interruption of the power supply, 226, 330
Limitation of movement, 217
Mechanism for isolating the SUPPLY MAINS, 149
Overflow, 192
Overheating of transformers, 218, 220
Poor contact, 148
Prolonged operation, 215
Short circuiting of a battery, 214
Short circuiting of CREEPAGE DISTANCES or AIR CLEARANCES, 139
Speed of movement, 159
Spillage, 192
THERMAL CUT-OUTS and OVER-CURRENT RELEASES, 213
THERMOSTAT, 213
Transformer failure, 220
Health care professional, 247
HIGH VOLTAGE, 65
Defibrillation protection, 285
Definition, 31
Part, 265, 372
Part, Marking of, 66, 358
Humidity preconditioning, 55, 101, 124, 139, 140, 220, 261, 301, 352
HYDRAULIC TEST PRESSURE, 169, 170
Definition, 31
Installation instruction
Transient current, 224
Instructions for use, 35, 53, 54, 55, 56, 59, 64, 65, 70, 72, 73, 74, 78, 81, 82, 96, 100, 119, 122, 124, 156, 162, 164, 174, 181, 192, 193, 224, 230, 248, 258, 262, 267, 268, 286, 345, 357, 374
Inspection, 77, 81, 182
Unique version identifier, 77
INSULATION CO-ORDINATION
Definition, 31
IEC 60950-1, 86, 87, 123, 129, 250, 251
INTENDED USE, 24, 36, 44, 73, 156, 168, 177, 212, 240, 248, 254, 268, 287, 306, 310, 314, 328, 342, 397, 399
Definition, 31
ESSENTIAL PERFORMANCE, 242
EXPECTED SERVICE LIFE, 256
Identification of ESSENTIAL PERFORMANCE, 49
NORMAL USE definition, 35
INTERNAL ELECTRICAL POWER SOURCE, 32, 39, 53, 55, 74, 215, 216, 267, 343
Definition, 32
INTERNALLY POWERED, 59, 89, 120, 132, 284, 285

--`,,`,,`-`-`,,`,,`,`,,`---
Copyright International Electrotechnical Commission
Provided by IHS Markit under license with IEC
No reproduction or networking permitted without license from IHS
Not for Resale, 08/26/2020 19:12:41 MDT

Definition, 32
IP Classification, 59, 64, 217, 227
Isolated power supply (IPS), 224
IT-NETWORK, 207, 208, 340, 395, 396
Configuration, 208
Connection of additional items, 208
Definition, 44
Disconnecting items, 208
Update of equipment, 208
Upgrade of equipment, 208
Lampholder, 66, 81, 183
Layperson, 38, 247
LEAKAGE CURRENT, 32, 41, 81, 88, 100, 101, 118, 119, 198, 224, 233, 248, 254, 260, 267, 270, 272, 274, 283, 284, 289, 290, 291, 292, 293, 296, 297, 308, 347, 348, 352, 353, 401
Definition, 32
Measurement, 79, 88, 89, 99, 104, 119, 192, 193, 225, 261, 272, 290, 296, 297
SINGLE FAULT CONDITION, 260
TYPE B APPLIED PART, 283
Value, 102
LEDs, 323
MAINS CONNECTION
Total protective earth path, 227
MAINS CONNECTOR, 25, 32, 151, 152, 283, 284, 308
Definition, 32
MAINS PART, 29, 55, 101, 125, 126, 128, 129, 131, 132, 133, 135, 136, 139, 148, 149, 154, 155, 244, 250, 260, 269, 299, 302, 303, 306, 309, 353
Definition, 32
Overvoltage category, 132
Separation from SECONDARY CIRCUIT, 39
MAINS PLUG, 75
MAINS PLUG, 79, 98, 99, 100, 150, 226, 227, 245, 274, 348, 349
Definition, 32
MAINS SUPPLY TRANSFORMER, 218, 227, 343, 344, 353
Definition, 32
MAINS TERMINAL DEVICE, 152, 153, 154, 227, 308, 309, 356
Definition, 32
MAINS TRANSIENT VOLTAGE, 131, 132, 135, 149
Definition, 32
MAINS VOLTAGE, 89, 104, 118, 135, 136, 235, 245, 292, 294, 296, 297, 298, 303, 377, 382
Definition, 33
NOMINAL, 35, 131
RATED, 178
RATED, 101, 131, 177, 225, 284
MANUFACTURER
ESSENTIAL PERFORMANCE, 255, 256
MANUFACTURER, 31, 34, 35, 38, 39, 47, 48, 59, 75, 76, 78, 88, 98, 120, 130, 141, 151, 154, 166, 167, 169, 170, 171, 173, 178, 179, 182, 188, 191, 193, 194, 195, 196, 203, 205, 207, 208, 212, 214, 216, 231, 232, 237, 239, 241, 253, 258, 260, 264, 265, 267, 268, 275, 282, 284, 287, 297, 309, 313, 314, 316, 317, 319, 324, 328, 329, 331, 334, 335, 336, 337, 339, 341, 342, 349, 395, 402
Acceptance criteria, 48, 254
Alternative measure or test method, 50
Alternative RISK CONTROL measures, 314, 319
Calculations or test results, 178
Calculations or test results, 48
calculations, analyses or test results, 254, 255
Definition, 33
Detachable components, 61
Equivalent safety, 257
ESSENTIAL PERFORMANCE, 29, 242
Expected service life, 29, 49, 256, 257
Flammable anaesthetic mixtures, 350
Identification of ESSENTIAL PERFORMANCE, 49
INTENDED USE, 73
Marking of name or trademark and contact information, 61
Marking of name or trade-name, 73
Marking of name or trade-name and address, 73
Marking of name or trade-name and contact information, 62
ME SYSTEM, 222, 223, 224, 246, 253, 345, 346, 347
PEMS, 207, 208, 396, 399
Qualification of SERVICE PERSONNEL, 78
Reasonably foreseeable misuse, 253
RISK ASSESSMENT, 319
Single use, 76
Specification of overvoltage category, 53
System integration, 395
Marking, 255
Overflow, 192
Material group classification, 130
MAXIMUM MAINS VOLTAGE, 79, 88, 89, 101, 104, 121, 224, 245, 272, 284, 293, 298, 409
Definition, 33
MAXIMUM PERMISSIBLE WORKING PRESSURE, 169, 170, 171, 245, 316, 317
Definition, 33
ME EQUIPMENT
FIXED, 162
PERMANENTLY INSTALLED, 309
See MEDICAL ELECTRICAL EQUIPMENT, 34
ME SYSTEM
Large transient currents, 224
See MEDICAL ELECTRICAL SYSTEM, 34
MEANS OF OPERATOR PROTECTION, 86, 129, 133, 140, 215, 218, 224, 245, 275, 305, 343, 344, 422
Additional AIR CLEARNACE, 136
Capacitors, 87
Definition, 33
IEC 60950-1, 87, 98, 123, 129, 130
Minimum AIR CLEARANCE, 135, 137
Minimum CREEPAGE DISTANCE, 133, 138
PROTECTIVE EARTH CONNECTION, 86
Solid insulation forming, 86
Test voltage for, 127
Test voltage for solid insulation, 126
MEANS OF OPERTOR PROTECTION
Coatings, etc. complying with IEC 60950-1, 84
MEANS OF PATIENT PROTECTION, 98, 130, 140, 188, 222, 234, 235, 245, 275, 344, 375, 381, 422
Capacitors, 86

Copyright International Electrotechnical Commission
Provided by IHS Markit under license with IEC
No reproduction or networking permitted without license from IHS
Not for Resale, 08/26/2020 19:12:41 MDT

Coatings, etc. complying with IEC 60950-1, 84
Definition, 33
F-TYPE APPLIED PART, 88, 282
PATIENT CONNECTION, 89
PROTECTIVE EARTH CONNECTION, 86
Solid insulation forming, 85
Spacing, 134, 304
Test voltage for solid insulation, 126
TYPE B APPLIED PART, 88
MEANS OF PROTECTION, 25, 29, 32, 33, 84, 129, 151, 154, 174, 175, 256, 413, 414, 415, 422
AIR CLEARANCE, 139
Coatings, etc. not considered as, 84
Components and wiring, 84
Components used as, 51
CREEPAGE DISTANCE or AIR CLEARANCE not considered as, 84
CREEPAGE DISTANCE or AIR CLEARANCE, 85, 141, 153
Definition, 33
DOUBLE INSULATION, 90
Insulating characteristics and mechanical strength, 128
Insulating material in which heating conductors are embedded, 128
Internal screens and internal wiring, 100, 289
Pollution degree 4, 131
REINFORCED INSULATION, 38, 123
Resistors bridging, 258
SECONDARY CIRCUIT, 39
Separation from MAINS PART, 148
Sheath of a flexible cord, 149
Short circuit of, 79, 153, 183
Short circuit of CREEPAGE DISTANCE or AIR CLEARANCE, 79
SUPPLEMENTARY INSULATION, 40, 123
Test voltage for, 220, 301
Test voltage for solid insulation, 126
Transformer, 221
Transformers forming, 221
Wetting of, 191
WORKING VOLTAGE for, 89
RISK CONTROL, 314
RISK CONTROL, 321
MECHANICAL HAZARD, 155, 156, 158, 198, 200, 225, 230, 309, 310, 348
Definition, 33
Sharp edges, 161
MECHANICAL PROTECTIVE DEVICE, 50, 51, 172, 175, 176, 177, 321, 355
Definition, 34
When not required, 177
Medical device, 47, 231, 334, 335, 392
MEDICAL ELECTRICAL EQUIPMENT, 217
a.c SUPPLY MAINS, 55
Accessibility of connections, 154
Acoustic energy and vibration, 167
Adapting, 33
Applicability of requirements, 18
Arrangement of controls and indicators, 208
Automatically or remotely controlled, 199
Battery, 74, 214
Battery replacement, 214
Biocompatibility, 194
CATEGORY AP, 372, 373, 374, 375, 376
CATEGORY APG, 373, 374, 375, 381
CLASS I, 74, 120, 154
CLASS II, 63, 100, 120, 154
Classification, 59
Cleaning, 76, 193
Compatibility with substances, 193
Component, 47, 51, 191
COMPONENT WITH HIGH-INTEGRITY CHARACTERISTICS, 28, 52
Condition for application, 45
Conductors and connectors, 147
Connection to SUPPLY MAINS, 79
Connectors, 212
CONTINUOUS OPERATION, 59, 64, 183
Contraindication, 73
Controls, 216
Cooling provisions, 65
d.c., 89
d.c. SUPPLY MAINS, 55, 80
Definition, 34
Description, 75, 78
Detachable components, 61
Diagnostic or therapeutic radiation, 196
Disabling of controls, 201
Disposal, 77
DUTY CYCLE, 29, 201
Educational materials, 74
Emergency stop, 160, 161
Emitting radiation, 77
Equivalent safety, 50
Excessive radiation, 195
EXPECTED SERVICE LIFE, 49, 51, 59, 60, 79, 98, 128, 172, 177, 178, 212
Expelled parts, 166
FIXED, 60, 120, 163, 189
FIXED or HAND-HELD, 161
Fixing of components, 147
Fluid reservoir, 191
Foot-operated control device, 217
Function, 25, 75, 78
Guiding rollers, 148
Hand loaded, 203
HAND-HELD, 53, 182, 199, 203, 210
HAND-HELD control device, 217
Heating elements, 182, 201
Identification, 61, 73
Identification of ESSENTIAL PERFORMANCE, 49
In vitro diagnostic equipment, 18
Indicator lights, 215
Input supply voltage, 90
Inspection, 84, 218
Instability, 162
Installation, 75
INTENDED USE, 73, 156, 168, 212, 254
INTERNALLY POWERED, 59, 89, 120, 132
Interruption and short circuiting of motor capacitors, 199
Interruption of SUPPLY MAINS, 194
IP Classification, 193, 217
Isolation from SUPPLY MAINS, 77, 149, 150
Large, 212
Load-reducing device, 203
Mains operated, 74
Manual MOBILE, 164
Manually switched on, 203

Copyright International Electrotechnical Commission
Provided by IHS Markit under license with IEC
No reproduction or networking permitted without license from IHS
Not for Resale, 08/26/2020 19:12:41 MDT

MECHANICAL PROTECTIVE DEVICE, 176
MEDICAL ELECTRICAL SYSTEM, 34
Method of sterilization, 65
MOBILE, 66, 164, 165, 192, 211, 212, 218, 265, 312, 313
MOBILE Part, 211, 212
MOBILE, power-driven, 165
Modification, 78
Motor, 201
Motor operated, 182, 199
Motor-driven MOBILE, 164
Moving parts, 155, 158, 161
Multiple cleanings/disinfections, 193
Multiple PATIENT CONNECTION, 122
MULTIPLE SOCKET-OUTLET, 63, 74, 150
Non-, 52, 222, 223, 224, 226, 349
Non-SI Units, 69
Oil-filled, 77, 218
Operating instructions, 75
Overcharging, 215
Overtravel, 159
Overvoltage category, 131
OXYGEN RICH ENVIRONMENT, 59
Part, 9, 28, 33, 40, 55, 56, 59, 60, 61, 64, 65, 67, 75, 78, 79, 83, 98, 99, 148, 158, 159, 162, 163, 166, 171, 173, 179, 180, 182, 191, 208, 209, 218, 373, 374, 376, 380, 381, 382, 385
Part biocompatibility, 194
Part cleaning, 76, 193
Part sterilization, 193
Part, HAND-HELD, 210
Part, heating, 201
Part, multiple cleanings/disinfections, 193
Parts that contact the PATIENT, 50
PATIENT ENVIRONMENT, 36
PERMANENTLY INSTALLED, 61, 63, 67, 78, 79, 96, 98, 101, 119, 149, 152, 154
PERMANENTLY INSTALLED, 167
Physiological effects, 65
Physiological function, 18
Platen glass, 210
Pneumatic and hydraulic parts, 168
Polyphase, 79, 89, 202
PORTABLE, 166, 210, 211, 218
PORTABLE part, 210
Power input, 53
Pressure control device, 170
Pressure relief device, 171
PROTECTIVE EARTH CONNECTION, 70
Protective measure, 158, 159
RATED altitude, 130
RATED voltage, 55
Ready for NORMAL USE, 215
Rechargeable battery, 76
Reciprocal interference, 74
Release of PATIENT, 161
RESPONSIBLE ORGANIZATION, 38
RISK
of fire, 184
RISK MANAGEMENT PROCESS, 45
Rough surfaces, sharp corners and edges, 161
Routine maintenance, 76
Separate power supply, 55, 62, 74, 76, 80, 224
Shutdown PROCEDURE, 76
SI Units, 68
SINGLE FAULT CONDITION, 50
SINGLE FAULT CONDITION definition, 40
SINGLE FAULT SAFE, 50
Single use, 61
Source of power, 53
Spark source, 184
Spillage, 192
Stand-by or a warm-up state, 215
Start-up PROCEDURE, 75
STATIONARY, 152, 189
Sterile, 65, 77
Sterilization, 193
SUPPLY MAINS, 53
Surface, 180
Surface coating, 99
Thermostatically controlled, 201
Timer, 203
Transformer, 218, 220, 221
TRANSPORTABLE, 60, 189, 192, 329
Unpacking, 65
MEDICAL ELECTRICAL SYSTEM, 39, 40, 75, 76, 80, 100, 188, 191, 222, 223, 224, 225, 226, 227, 228
Adapting, 33
Applicability or requirements, 18
Biocompatibility, 194
Cleaning, 193
Component, 47
Components, 52
Condition for application, 45
Creation of, 74
Definition, 34
Equivalent safety, 50
EXPECTED SERVICE LIFE, 49
Function, 25
Identification of ESSENTIAL PERFORMANCE, 49
INTENDED USE, 156, 254
IP Classification, 193
Multiple cleanings/disinfections, 193
OXYGEN RICH ENVIRONMENT, 59
Part, 225
Parts that contact the PATIENT, 50
PATIENT ENVIRONMENT, 36
Physiological function, 18
Power input, 53
RESPONSIBLE ORGANIZATION, 38
RISK MANAGEMENT PROCESS, 45
RISK of fire, 184
Spillage, 192
Sterilization, 193
Supplied from a UPS or IPS, 224
SUPPLY MAINS, 53
Total PATIENT LEAKAGE CURRENT, 225
Total protective earth path, 227
TOUCH CURRENT, 224
Medical gas pipeline system, 18
MOBILE, 165, 313, 357
Definition, 34
EQUIPMENT, 41
ME EQUIPMENT, 66, 164, 165, 192, 209, 211, 218, 265, 312, 313, 341
ME EQUIPMENT parts, 211, 212

Copyright International Electrotechnical Commission
Provided by IHS Markit under license with IEC
No reproduction or networking permitted without license from IHS
Not for Resale, 08/26/2020 19:12:41 MDT

MODEL OR TYPE REFERENCE, 61, 62, 73, 246, 263, 264
Definition, 34
Detachable components, 61
MOOP
See MEANS OF OPERATOR PROTECTION, 33
MOP
See MEANS OF PROTECTION, 33
MOPP
See MEANS OF PATIENT PROTECTION, 33
MSO
See MULTIPLE SOCKET-OUTLET, 34
MULTIPLE SOCKET-OUTLET, 34, 63, 64, 74, 150, 223, 225, 226, 227, 246, 247, 296, 308, 346, 347, 348, 349, 355, 401, 405, 422
Definition, 34
NETWORK/DATA COUPLING, 75, 205, 206, 247, 340, 396, 397, 399
Definition, 34
NOMINAL
Capacitance, 86, 87
Conductor diameter, 414
Cross-sectional area of conductors, 150, 151, 153
Definition, 35
Frequency, 53, 63
MAINS VOLTAGE, 35, 53, 131, 132, 135, 136, 137
Supply voltage, 63
NORMAL CONDITION, 28, 36, 50, 51, 67, 79, 80, 81, 84, 88, 90, 101, 102, 103, 105, 122, 149, 159, 167, 179, 181, 184, 187, 192, 193, 197, 198, 201, 222, 224, 225, 229, 247, 248, 269, 270, 271, 272, 274, 289, 290, 291, 292, 293, 294, 298, 303, 316, 328, 329, 330, 332, 347, 373, 376, 380, 381, 382, 410
Definition, 35
Identification of ESSENTIAL PERFORMANCE, 49
NORMAL USE, 25, 28, 34, 35, 39, 41, 43, 45, 54, 56, 60, 65, 67, 68, 75, 76, 81, 82, 84, 90, 100, 121, 122, 123, 124, 148, 149, 150, 156, 160, 161, 162, 163, 164, 165, 166, 167, 168, 170, 173, 174, 175, 177, 178, 179, 182, 188, 191, 192, 193, 203, 210, 211, 213, 215,216, 217, 218, 219, 220, 225, 226, 229, 234, 236, 237, 238, 239, 243, 254, 258, 259, 285, 286, 310, 312, 313, 317, 324, 326, 328, 329, 330, 331, 341, 342, 343, 346, 350, 375, 376, 380, 381, 382
Definition, 35
INTENDED USE definition, 31
OBJECTIVE EVIDENCE, 42, 48, 254, 255, 346
Definition, 35
Operating temperature, 67, 101, 104, 124, 179, 180, 225, 301, 326, 352, 376, 380, 381
OPERATOR, 24, 35, 41, 43, 60, 65, 69, 73, 74, 75, 76, 77, 81, 100, 158, 162, 173, 176, 187, 195, 200, 208, 215, 216, 222, 224, 229, 230, 231, 233, 237, 241, 242, 245, 246, 247, 256, 257, 258, 260, 262, 263, 264, 267, 268, 273, 274, 275, 286, 287, 291, 301, 310, 311, 312, 314, 330, 333, 341, 343, 346, 347, 357, 397, 401
Contact with, 121, 223, 270, 271, 273, 286, 324
Contact with PATIENT, 81
Definition, 35
Emergency stop, 160
Expected position of, 75, 167, 322
Exposure to hazardous materials, 75
Home use, 38
Language acceptable to, 70
Mass of, 173, 319
Mechanism for isolating the SUPPLY MAINS, 149
MOBILE MEDICAL ELECTRIC EQUIPMENT, 265
Moving parts, 156, 159
RISK to, 358
Sensitivity to acoustic energy and vibration, 167
Sensitivity to vibration, 168
Spurious microwave radiation, 178
Spurious X-radiation, 177
Support, 173, 174, 177, 317
Unwanted or excessive radiation, 195
OVER-CURRENT RELEASE, 66, 129, 154, 198, 213, 214, 215, 258, 265, 272, 306, 309, 372
Definition, 35
OXYGEN RICH ENVIRONMENT, 59, 184, 186, 187, 188, 200, 248, 326, 327, 328, 345
Definition, 35
PATIENR LEAKAGE CURRENT, 259
PATIENT, 25, 29, 33, 34, 36, 41, 45, 50, 65, 68, 162, 173, 177, 208, 216, 229, 230, 231, 233, 240, 241, 245, 247, 251, 255, 260, 288, 291, 293, 310, 312, 343, 347, 373
Acting as an OPERATOR, 267
Adult human, 173
APPLIED PART exceed 41°C, 181
APPLIED PARTS intended to supply heat to, 181
APPLIED PARTS not intended to supply heat to, 181
Cable, 64, 119, 213, 225, 226, 234, 236, 239, 264, 285, 297
Circuit, 235
Condition, 296
Contact with, 50, 76, 81, 89, 121, 122, 159, 181, 223, 231, 233, 234, 236, 237, 241, 248, 249, 257, 258, 271, 273, 274, 275, 283, 287, 290, 291, 292, 297, 299, 303, 310, 324, 345, 357, 401
Current flowing in, 35, 248, 251, 284, 298
Defibrillation of, 91, 265, 285, 286, 287
Definition, 35
Disconnection from, 122, 298
Earthing of, 36, 90, 249, 283, 292, 303
Electric shock to, 33, 262
Expected position of, 75, 167
Exposure to hazardous materials, 75
Exposure to toxic gases, 188
Heart, 29, 241, 270, 346
Home use, 38, 247
Incorrect delivery of energy or substances, 195, 331
Lead, 89, 91, 213, 226, 234, 236, 239, 283
Mass of, 173, 319, 355, 356
Moving of, 155, 174
Moving parts, 155, 156, 161
Number of APPLIED PARTS, 293
PATIENT ENVIRONMENT, 36
PATIENT is an intended OPERATOR, 73

Copyright International Electrotechnical Commission
Provided by IHS Markit under license with IEC
No reproduction or networking permitted without license from IHS
Not for Resale, 08/26/2020 19:12:41 MDT

Release of, 161, 312
RISK to, 242, 295, 358
Sensitivity to acoustic energy, 314
Sensitivity to acoustic energy and vibration, 167
Sensitivity to vibration, 168, 314
Special needs, 159, 332
Support, 163, 164, 173, 174, 177, 234, 249, 261, 273, 309, 310, 317
Support of, 321
Transfer of energy, 80, 81, 273
Unintended voltage on, 30, 36, 245, 283, 284, 294, 298, 401
Unwanted or excessive radiation, 195, 322
PATIENT AUXILIARY CURRENT, 81, 100, 101, 103, 119, 122, 234, 236, 248, 249, 259, 292, 299, 352, 353, 368
Definition, 35
Limit, 41
Measurement, 104, 122, 249
Value, 101, 294
Values, 273, 274, 290
PATIENT CONNECTION, 25, 30, 35, 36, 41, 80, 81, 88, 89, 91, 96, 103, 118, 121, 122, 125, 234, 236, 237, 238, 239, 248, 249, 260, 264, 270, 273, 274, 291, 294, 296, 297, 299
DEFIBRILLATION-PROOF APPLIED PART, 91, 95, 285
Definition, 36
Energy reduction test, 96
F-TYPE APPLIED PART, 90, 104, 283, 292, 303
Multiple, 122, 298
Single, 122, 298
TYPE B APPLIED PART, 121, 251, 283, 298
TYPE BF APPLIED PART, 251, 298
TYPE CF APPLIED PART, 251, 270, 293
WORKING VOLTAGE, 90
PATIENT ENVIRONMENT, 222, 223, 224, 226, 249, 345, 346, 347, 348, 349, 401
Definition, 36
PATIENT LEAKAGE CURRENT, 32, 103, 104, 118, 122, 234, 236, 249, 267, 291, 292
Definition, 36
Limit, 30, 41, 81, 88, 99, 293, 297, 298
ME SYSTEM, 225, 347
Measurement, 104, 121, 122, 297, 299
MULTIPLE SOCKET-OUTLET, 225
Total, 103, 104, 122, 225, 293, 294, 347
TYPE B APPLIED PART, 283
TYPE BF APPLIED PART, 294, 298
TYPE CF APPLIED PART, 251, 292
Value, 101, 104, 292, 294
PEAK WORKING VOLTAGE, 123, 126, 127, 131, 132, 133, 136, 245, 250, 251
Definition, 36
Interpolation, 130
PEMS
See PROGRAMMABLE ELECTRICAL MEDICAL SYSTEM, 37
PEMS DEVELOPMENT LIFE-CYCLE, 203, 204, 335, 336, 339, 388, 393
Definition, 36
PEMS VALIDATION, 36, 339, 391
Definition, 36
Methods, 206
Plan, 204, 206, 335
Results, 206
Team, 207
PERMANENTLY INSTALLED
Definition, 36
ME EQUIPMENT, 61, 63, 67, 78, 79, 96, 98, 101, 119, 149, 152, 154, 167, 269, 309
MEDICAL ELECTRICAL EQUIPMENT, 67
Non-, 102, 149, 224
PESS
See PROGRAMMABLE ELECTRONIC SUBSYSTEM, 37
Placed into service, 31, 34, 36, 40, 41
Pollution degree 1, 140
Pollution degree 2, 140
Pollution degree 3, 140
Pollution degree classification, 131
PORTABLE
Definition, 36
Equipment, 41
ME EQUIPMENT, 166, 209, 210, 218, 341
ME EQUIPMENT part, 210, 211
POTENTIAL EQUALIZATION CONDUCTOR, 71, 100, 289, 355, 357
Definition, 36
POWER SUPPLY CORD, 32, 151, 308, 309, 327, 348
Clamping means, 98
CLASS II ME EQUIPMENT, 100
Colour of conductors, 71, 242
Conductors, 151, 152
Cord anchorage, 151
Cord connection, 148, 153, 375
Cord guard, 152
Cross-sectional area of conductors, 150, 154
Definition, 37
Incorporating switches, 149
Insulation of, 151
MAINS PLUG, 150
MULTIPLE SOCKET-OUTLET, 227, 247
Neutral conductor, 71
POTENTIAL EQUALIZATION CONDUCTOR, 100
PROTECTIVE EARTH CONDUCTOR, 98
Replaceable, 78, 154
Sheathing, 150
Strain relief, 151
Testing with, 119, 141, 162
PRIMARY OPERATING FUNCTION, 159
Definition, 44
PROCEDURE, 39, 275, 291, 327, 334, 337, 339
Cleaning, 193, 223
Definition, 37
Document control, 204
Energy reduction test, 96
LEAKAGE CURRENT measurement, 104
Maintenance, 291
Measuring X-radiation, 322
Modification/change, 207
RISK CONTROL, 205
RISK MANAGEMENT, 253
Shutdown, 76
Start-up, 75, 233
Sterilization, 101, 124, 193
Test, 120, 178, 179, 192, 193, 286, 302, 414
Thermal cycling, 139, 140
PROCESS, 25, 31, 47
Assessment of APPLIED PARTS, 234

Copyright International Electrotechnical Commission
Provided by IHS Markit under license with IEC
No reproduction or networking permitted without license from IHS
Not for Resale, 08/26/2020 19:12:41 MDT

Cleaning, 357
Cleaning or disinfection, 193
Definition, 37
Design, 253
Handling of PATIENT, 174
Manufacturing, 99, 171, 259, 331
Multiple cleanings/disinfections, 193
PEMS DEVELOPMENT LIFE-CYCLE, 203, 333, 334, 335, 336, 337, 338, 388, 391, 393
PEMS VALIDATION, 36
Procedure, 37
RISK ASSESSMENT, 38
RISK CONTROL, 38
RISK EVALUATION, 39
RISK MANAGEMENT, 42, 46, 47, 48, 50, 51, 79, 84, 89, 167, 178, 179, 181, 187, 191, 192, 193, 194, 195, 196, 198, 203, 205, 208, 216, 217, 230, 233, 236, 243, 253, 254, 256, 257, 258, 260, 265, 312, 314, 327, 330, 333, 334, 341, 351
Software development, 204
Thermoforming, 341
USABILITY ENGINEERING, 73, 194, 208, 253, 267, 330
USABILITY ENGINEERING, 44
VERIFICATION, 336
PROGRAMMABLE ELECTRICAL MEDICAL SYSTEM (PEMS), 36, 37, 61, 203, 205, 206, 207, 208, 231, 333, 340, 422
PROGRAMMABLE ELECTRONIC SUBSYSTEM (PESS), 37, 203, 205, 206, 422
Definition, 37
PROPERLY INSTALLED, 65, 155
Definition, 37
PROTECTIVE EARTH CONDUCTOR, 29, 32, 36, 37, 41, 70, 79, 96, 98, 99, 118, 120, 121, 151, 153, 154, 225, 227, 247, 258, 267, 289, 291, 308, 347, 348, 401
Definition, 37
ME SYSTEM, 228
Non-PERMANENTLY INSTALLED, 224
PROTECTIVE EARTH CONNECTION, 33, 79, 86, 87, 98, 99, 100, 101, 227, 245, 247, 265, 271, 272, 283, 286, 287, 288, 289, 297, 299, 301, 307, 309, 329, 348, 405
Colour of, 70
Definition, 37
ME SYSTEM, 228
PROTECTIVE EARTH TERMINAL, 37, 38, 66, 98, 99, 118, 153, 227, 265, 274, 288
Definition, 37
PROTECTIVELY EARTHED, 28, 41, 88, 91, 96, 98, 99, 100, 118, 120, 121, 132, 251, 274, 283, 287, 347, 348
Definition, 38
Non-, 101, 104, 120, 121, 151, 251, 271, 285
RATED
Altitude, 130
CATEGORY AP, 328
CATEGORY APG, 328
Characteristics, 149
Components, 227
Current, 78, 99, 151, 220
Definition, 38
DUTY CYCLE, 201
Fire protection device, 215
Flow rate, 65
Frequency, 55, 101, 218, 220, 302, 344
Input, 53
Input power, 53, 63
IP Classification, 261
Load, 170
MAINS VOLTAGE, 131, 136, 177, 178, 284
Marked, 63
Non-CONTINUOUS OPERATION, 201, 203
On and off periods, 182, 225
Operating time, 201
Operation, 241, 262, 333
Output current or power, 64
Output power, 227
Output voltage, 64
Phase to neutral supply voltage, 89
Pressure, 65
Protection against particulate matter, 329
Supply frequency, 63
Supply frequency range, 63
SUPPLY MAINS, 55
SUPPLY MAINS voltage, 83
Supply voltage, 62, 89, 201, 225, 285, 296, 297
Supply voltage range, 62
Temperature, 150
Voltage, 53, 55, 76, 83, 84, 90, 182, 199, 202, 203, 218, 220, 283
Voltage (maximum), 182
Voltage (minimum), 182
Voltage range, 63, 90, 203
SUPPLY MAINS, 63
Reasonably foreseeable misuse, 28, 45, 52, 155, 156, 160, 184, 206, 229, 253, 262, 314, 333, 341
RECORD, 39, 47, 203, 253, 340
Definition, 38
Examination of, 47
USABILITY ENGINEERING FILE, 44
REINFORCED INSULATION, 28, 50, 51, 123, 128, 164, 209, 241, 250, 270, 271, 274, 277, 299, 301, 303, 309, 348, 413, 414, 415
Definition, 38
Removable protective means, 65
RESIDUAL RISK, 46, 255, 256
Acceptability criteria, 48
Acceptability of, 275, 287, 310, 346
Alternative measure or test method, 257
Definition, 38
Equivalent safety, 257
ESSENTIAL PERFORMANCE, 255
Evaluation, 48
Identifiable safety requirements, 337
Indication of, 162, 310
Moving parts, 155
of fire, 187
SERVICE PERSONNEL, 248
System integrator, 395
Unacceptable, 255
RESPONSIBLE ORGANIZATION, 24, 33, 39, 73, 74, 76, 78, 82, 208, 222, 223, 225, 256, 261, 264, 267, 268, 290, 322, 324, 328, 346, 347, 349, 374, 395, 396, 397
Definition, 38
EXPECTED SERVICE LIFE, 257

Copyright International Electrotechnical Commission
Provided by IHS Markit under license with IEC
No reproduction or networking permitted without license from IHS
Not for Resale, 08/26/2020 19:12:41 MDT

Home use, 38
Instructions for use, 74
Mechanism for isolating the SUPPLY MAINS, 149
Periodic inspection and maintenance, 342
HAZARDOUS SITUATION, 208
RISK, 48, 49, 254
Acceptability criteria, 48
Acceptability of, 255
Acceptable, 34, 39, 47, 48, 50, 160, 161, 162, 205, 243, 254, 255, 314, 334, 340
Acceptance criteria, 39
Accidental disconnection, 100
Accidental selection of excessive output values, 195
Accuracy of controls and instruments, 194
Alpha, beta, gamma and neutron radiation, 178
Arrangement of controls and indicators, 208
Burn, 273, 290, 296
Compatibility with substances, 193
COMPONENT WITH HIGH-INTEGRITY CHARACTERISTICS, 337
Consequent, 336
Definition, 38
Diagnostic or therapeutic acoustic pressure, 196
Diagnostic or therapeutic radiation, 196
Disconnection, 308
Earthing the PATIENT, 282
Electric shock, 33
Electric shock to others than the PATIENT, 33
Electric shock to PATIENT, 33
ESSENTIAL PERFORMANCE, 255
Evaluation, 47
Expelled parts, 166
Explanation, 223
Failure of component, 51
Fault, 309
Fire, 332
Flammable agent, 329
HIGH VOLTAGE, 265
Identification of ESSENTIAL PERFORMANCE, 49
Identified, 205
Ignition, 188
Incorrect delivery of energy or substances, 195
Incorrect output, 195
Infra- and ultrasound, 167
Infrared radiation, 179
Initial movement, 165
Insulation breakdown, 260, 275
Intentional exceeding of safety limits, 194
Mechanical rupture, 316
Mix-up, 340, 342
Moulding and mechanical stress, 209
Moving part, 310
Moving parts, 155
Multiple PATIENT CONNECTIONS, 296, 298, 299
New, 208
of accumulation and ignition, 214
of contact, 283
of explosion, 372
of fire, 184, 308
Overbalancing, 163, 355
Overtravel, 159
PATIENT ENVIRONMENT, 346
PATIENT support, 173
PEMS, 335
PEMS problem resolution, 204
Poor USABILITY, 194
Pre-set controls, 216
Previously unidentified, 208
Radiotherapy, 195
Reciprocal interference, 74
Reduction, 40, 51, 316, 337
Replacement of lithium batteries or fuel cells, 66
Safety sign, 69
Servicing, 248
Sharp edge, 312
SINGLE FAULT CONDITION, 260
Slow, unwanted movement, 314
Spillage, 329
to PATIENT, 233, 242, 257, 284, 293, 295
to PATIENT or OPERATOR, 358
TYPE B APPLIED PART, 88
Ultraviolet radiation, 179
Unacceptable, 28, 29, 40, 47, 51, 52, 65, 68, 74, 75, 78, 80, 89, 128, 147, 156, 159, 161, 164, 166, 167, 168, 169, 171, 173, 174, 175, 181, 184, 192, 193, 198, 203, 208, 209, 210, 211, 212, 213, 214, 215, 217, 222, 226, 241, 242, 255, 258, 263, 311, 312, 313, 319, 331, 341, 346
USABILITY ENGINEERING, 330
Ventricular fibrillation, 290, 292
Vibration, 315
Visible electromagnetic radiation, 179
RISK ANALYSIS, 255
COMPONENTS WITH HIGH-INTEGRITY CHARACTERISTICS, 259
Definition, 38
Identification of ESSENTIAL PERFORMANCE, 49
Identification of failures, 331
Interruption of any one power-carrying conductor, 79
PEMS DEVELOPMENT LIFE-CYCLE, 334
Results of, 51
Revision of, 54
RISK ASSESSMENT, 38
Second fault, 258
Shorting of gaps, 331
SINGLE FAULT CONDITION, 293
Support system, 171
TOUCH CURRENT, 291
RISK ASSESSMENT, 319
Definition, 38
HAND-HELD APPLIED PARTS, 340
PEMS DEVELOPMENT LIFE-CYCLE, 334, 335, 338
Source of ignition, 188
RISK ASSESSMENT, 48
RISK CONTROL, 46, 255
Alternative measure or test method, 50
Alternative measures, 50
Compatibility with substances, 193
Definition, 38
Measure, 47, 156, 158, 203, 205, 206, 254, 256, 257, 260, 314, 334, 336, 337, 338, 339
Measures, 49
Option analysis, 256

Copyright International Electrotechnical Commission
Provided by IHS Markit under license with IEC
No reproduction or networking permitted without license from IHS
Not for Resale, 08/26/2020 19:12:41 MDT

PEMS DEVELOPMENT LIFE-CYCLE, 205, 334
RESIDUAL RISK, 38
RISK EVALUATION, 254
Definition, 39
RISK ASSESSMENT, 38
RISK MANAGEMENT, 49, 203
Activities, 204
Application of, 230, 234, 236, 237, 238, 239, 253, 293, 345
Contents of, 39
Definition, 39
Methods, 222, 346
PEMS DEVELOPMENT LIFE-CYCLE, 203, 334
Plan, 47, 48, 204, 255, 335
PROCESS, 25, 39, 42, 46, 47, 48, 50, 51, 79, 84, 89, 167, 178, 179, 181, 187, 191, 192, 193, 194, 195, 196, 198, 203, 205, 208, 216, 217, 230, 233, 236, 243, 253, 254, 256, 257, 258, 260, 265, 312, 314, 327, 330, 333, 334, 341, 351
RECORD, 47
RECORDS required by this standard, 48
Report, 340
Results of, 336
SINGLE FAULT CONDITION, 51
Support systems, 318
System integration, 396
Temperature limits, 324
RISK MANAGEMENT FILE, 47, 48, 54, 254
Alternative means of compliance, 189
Alternative methods of temperature measurement, 183
Cleaning/disinfection, 193
Contents of, 206, 253, 306, 307, 329, 334, 335, 341
Definition, 39
Equivalent safety, 257
Examination of, 48
EXPECTED SERVICE LIFE, 49
Fuses and OVER-CURRENT RELEASES, 154
Inspection, 49, 50, 52, 59, 81, 89, 98, 128, 147, 148, 154, 158, 160, 161, 166, 167, 168, 169, 170, 171, 172, 173, 174, 177, 178, 179, 182, 188, 191, 192, 193, 194, 195, 196, 198, 208, 210, 211, 212, 213, 214, 215, 216, 217, 226, 253, 255
Omission of OVER-CURRENT RELEASES, 215
Probability and duration of contact, 182
Professional relationships of PEMS VALIDATION TEAM members, 207
Spillage, 192
Temperature limits, 180, 181
Temperature test corner, 182
Worst case limits of oxygen concentration of flammable fuels, 184
RISK MANAGEMENT FILE, 159
RISK MANAGEMENT FILE, 175
SAFE WORKING LOAD, 41, 66, 160, 164, 165, 173, 174, 175, 177, 210, 211, 356
Definition, 39
MOBILE MEDICAL ELECTRIC EQUIPMENT, 265
Safety notice
Overflow, 192
Safety sign, 60, 64, 65, 66, 69, 70, 74, 163, 176, 226, 265, 355, 358, 360, 364, 365
SECONDARY CIRCUIT, 126, 132, 137, 250, 271, 296, 301, 302, 303
Definition, 39
SELF-RESETTING THERMAL CUT-OUT, 214
Definition, 39
Non-, 201, 213, 385
SEPARATION DEVICE, 224, 250, 346, 347, 404, 405
Definition, 39
Serial number
ACCESSORY, 62
ME EQUIPMENT, 61
SERVICE PERSONNEL, 41, 54, 61, 66, 73, 76, 78, 81, 99, 152, 176, 248, 262, 265, 269, 307, 308, 309, 343
Definition, 39
Mechanism for isolating the SUPPLY MAINS, 149
Qualification of, 78
Rough surfaces, corners and edges, 312
Spurious microwave radiation, 178
Spurious X-radiation, 177
Servicing, 208, 248, 308, 310, 396
SEVERITY, 38, 243, 255, 258, 286, 314
Definition, 40
SIGNAL INPUT/OUTPUT PART, 75, 79, 91, 103, 113, 118, 121, 125, 250, 286, 297, 347, 404, 411, 423
Definition, 40
SINGLE FAULT CONDITION, 28, 34, 36, 40, 47, 51, 79, 81, 83, 88, 99, 101, 102, 103, 104, 105, 107, 109, 113, 116, 118, 120, 121, 147, 158, 159, 181, 184, 187, 188, 192, 193, 196, 197, 198, 199, 200, 218, 229, 247, 254, 258, 260, 261, 269, 270, 271, 272, 274, 286, 289, 290, 291, 292, 293, 294, 297, 298, 307, 316, 317, 321, 326, 327, 328, 329, 331, 333, 348, 349, 373, 381, 382, 410
Definition, 40
Identification of ESSENTIAL PERFORMANCE, 49
Undetected, 261
SINGLE FAULT SAFE, 50, 158, 159, 199, 258, 328, 342, 343
Definition, 40
SIP/SOP
See SIGNAL INPUT/OUTPUT PART, 40
Software, 204, 207, 268, 334, 392
Maintenance, 334
STATIONARY
Definition, 40
Equipment, 310
ME EQUIPMENT, 60, 152, 189, 209
SUPPLEMENTARY INSULATION, 29, 123, 128, 164, 209, 241, 245, 274, 301, 413, 414, 415
Definition, 40
SUPPLY MAINS, 32, 33, 34, 36, 37, 49, 53, 59, 63, 75, 78, 79, 80, 83, 96, 99, 118, 119, 129, 132, 155, 163, 221, 224, 225, 245, 246, 247, 251, 256, 262, 267, 283, 284, 286, 296, 301, 302, 369
a.c., 55, 132, 285
Apparent impedance of, 77, 269
Characteristics of, 53, 290
d.c., 55, 80, 285
Definition, 40
Interruption of, 194, 330, 352

Copyright International Electrotechnical Commission
Provided by IHS Markit under license with IEC
No reproduction or networking permitted without license from IHS
Not for Resale, 08/26/2020 19:12:41 MDT

Isolation from, 77, 149, 150, 268, 269, 307
Overvoltage category, 131, 132, 303
Polyphase, 89, 149, 202, 370
RATED values, 55
Single-phase, 89
Socket-outlet, 30
Switch, 149
Symbol, 42, 61, 63, 64, 65, 66, 67, 68, 69, 70, 74, 75, 84, 100, 150, 161, 265, 296, 355, 358, 374
Technical description, 53, 54, 55, 56, 67, 72, 74, 75, 77, 78, 84, 149, 248, 357
Ambient temperature, 128
Inspection, 84, 218
Installation instructions, 182
Operating temperature, 179, 183
Transient current, 224
Unique version identifier, 78
TENSILE SAFETY FACTOR, 50, 51, 172, 173, 175, 177, 316, 317, 318, 319, 321
Definition, 40
TENSILE STRENGTH, 40, 172
Definition, 40
TERMINAL DEVICE
Definition, 40
HIGH-VOLTAGE, 65, 265
MAINS TERMINAL DEVICE, 32
THERMAL CUT-OUT, 66, 179, 183, 198, 200, 201, 213, 214, 265
Definition, 41
Manual reset, 214
SELF-RESETTING THERMAL CUT-OUT, 39
THERMAL STABILITY, 182, 183, 200, 201, 202, 203, 219, 220, 225
Definition, 41
THERMOSTAT, 201, 214, 356
Definition, 41
Failure of, 198, 213
TOOL, 25, 30, 36, 41, 56, 59, 60, 65, 66, 80, 81, 82, 83, 84, 98, 100, 148, 153, 156, 158, 171, 176, 177, 178, 179, 183, 212, 216, 224, 226, 227, 228, 262, 273, 310, 340, 342, 349, 375, 376, 405
Definition, 41
TOTAL LOAD, 40, 171, 173, 175, 318
Definition, 41
TOUCH CURRENT, 32, 103, 259, 267, 273, 291, 292, 348, 403, 405
Definition, 41
Limit, 81, 99, 224, 251, 272, 347, 401
ME SYSTEM, 102
Measurement, 104, 107, 120, 121, 297
MULTIPLE SOCKET-OUTLET, 225, 347
SINGLE FAULT CONDITION, 247, 349
Value, 101, 348
Transport and storage
Conditions, 65, 77, 212, 223, 269
Covers used during, 55
Data for, 77
Protective packaging, 65
TRANSPORTABLE
Definition, 41
Equipment, 34, 36, 44
ME EQUIPMENT, 60, 189, 192, 329
TRAPPING ZONE, 156, 158, 311
Definition, 41
TYPE B APPLIED PART, 42, 88, 121, 122, 251, 273, 283, 298, 411
Classification, 42, 50, 59, 80, 273, 290
DEFIBRILLATION-PROOF symbol, 363
Definition, 41
Marking of, 42, 64
Measurement, 117
PATIENT LEAKAGE CURRENT, 292
Symbol, 362
Total PATIENT LEAKAGE CURRENT, 293
TYPE BF APPLIED PART, 42, 121, 122, 251, 258, 273, 283, 293, 298, 299, 412
Classification, 30, 42, 50, 59, 80, 88, 273, 290
DEFIBRILLATION-PROOF symbol, 363
Definition, 42
Marking of, 42, 64
MEASUREMENT, 117
PATIENT LEAKAGE CURRENT, 292, 293
Symbol, 362
Total PATIENT LEAKAGE CURRENT, 294
TYPE CF APPLIED PART, 80, 104, 122, 251, 258, 270, 273, 283, 291, 292, 298, 299
Classification, 30, 50, 59, 80, 88, 273, 290
DEFIBRILLATION-PROOF symbol, 363
Definition, 42
Marking of, 42, 64
MEASUREMENT, 117
PATIENT LEAKAGE CURRENT, 293
Symbol, 362
Total PATIENT LEAKAGE CURRENT, 293, 294
TYPE TEST, 54, 124, 260, 413
COMPONENTS WITH HIGH-INTEGRITY CHARACTERISTICS, 259
Definition, 42
Samples, 54, 261
Uninterruptible power supply (UPS), 224
USABILITY, 194, 230, 262, 267, 330, 351
Definition, 42
USABILITY ENGINEERING, 73, 194, 253, 330
Definition, 42
PROCESS, 44, 208, 267
USABILITY ENGINEERING FILE
Definition, 44
Use by date
ACCESSORY, 62
ME EQUIPMENT, 61
VERIFICATION
Coverage criteria, 206, 334, 336, 337, 338
Definition, 42
fuse or OVER-CURRENT RELEASE, 154
Methods, 204
Milestones, 206
of Markings, 354
PEMS, 206, 388
Plan, 206, 339
Polymer properties, 342
Results, 206, 336
RISK CONTROL measures, 339
Strategies, 206, 391
Tools, 206, 339, 340
Warning, 60, 65, 66, 69, 74, 75, 78, 150, 155, 156, 162, 163, 168, 223, 264, 267, 308, 310, 312, 346, 347, 355, 357, 358, 364, 396

Copyright International Electrotechnical Commission
Provided by IHS Markit under license with IEC
No reproduction or networking permitted without license from IHS
Not for Resale, 08/26/2020 19:12:41 MDT

Overflow, 192
WORKING VOLTAGE, 36, 88, 89, 90, 123, 124, 134, 135, 137, 138, 220, 221, 224, 245, 250, 251, 258, 259, 271, 277, 285, 301, 302, 304, 409
Definition, 43
Interpolation, 130, 306
Y1 Capacitor, 86, 87
Y2 Capacitor, 86, 87

Copyright International Electrotechnical Commission
Provided by IHS Markit under license with IEC
No reproduction or networking permitted without license from IHS
Not for Resale, 08/26/2020 19:12:41 MDT

--`,,```,,,,````-`-`,,`,,`,`,,`---

Copyright International Electrotechnical Commission
Provided by IHS Markit under license with IEC
No reproduction or networking permitted without license from IHS

Not for Resale, 08/26/2020 19:12:41 MDT

IEC 60601-1

Edition 3.2 2020-08
CONSOLIDATED VERSION

FINAL VERSION

colour inside

Medical electrical equipment –
Part 1: General requirements for basic safety and essential performance

IEC 60601-1:2005-12+AMD1:2012-07+AMD2:2020-08 CSV(en)

Copyright International Electrotechnical Commission
Provided by IHS Markit under license with IEC
No reproduction or networking permitted without license from IHS

Not for Resale, 08/26/2020 19:12:41 MDT

Publication IEC 60601-1 (Third edition – 2005) I-SH 01

MEDICAL ELECTRICAL EQUIPMENT – Part 1: General requirements for basic safety and essential performance

INTERPRETATION SHEET 1

This interpretation sheet has been prepared by SC 62A: Common aspects of electrical equipment used in medical practice

The text of this interpretation sheet is based on the following documents:

ISH	Report on voting
62A/599/ISH	62A/613/RVD

Full information on the voting for the approval of this interpretation sheet can be found in the report on voting indicated in the above table.

_____

Subclause 1.1

This subclause is clarified by the following:

IEC 60601-1 does not apply to medical gas pipeline systems covered by ISO 7396-1, *Medical gas pipeline systems — Part 1: Pipeline systems for compressed medical gases and vacuum.*

NOTE Subclause 6.3 of ISO 7396-1 applies the requirement of IEC 60601-1-8 to certain monitoring and alarm signals.

This clarification will remain valid until a new version of IEC 60601-1 is published.

_____

--`,,```,,,,````-`-`,,`,,`,`,,`---

April 2008

Copyright International Electrotechnical Commission
Provided by IHS Markit under license with IEC
No reproduction or networking permitted without license from IHS
Not for Resale, 08/26/2020 19:12:41 MDT

Publication IEC 60601-1 (Third edition – 2005) I-SH 02

MEDICAL ELECTRICAL EQUIPMENT –

Part 1: General requirements for basic safety and essential performance

INTERPRETATION SHEET 2

This interpretation sheet has been prepared by subcomittee 62A: Common aspects of electrical equipment used in medical practice, of IEC technical committee 62: Electrical equipment in medical practice.

The text of this interpretation sheet is based on the following documents:

ISH	Report on voting
62A/634/ISH	62A/640/RVD

Full information on the voting for the approval of this interpretation sheet can be found in the report on voting indicated in the above table.

_____

Subclause 11.3

This subclause is clarified by the following:

As stated in the rationale for this subclause, fire ENCLOSURES are intended to be used only where there is a significant likelihood of fire due to the presence of a source of ignition (as described in the subclause) *and* a *significant* source of fuel. Most materials used in the construction of ME EQUIPMENT are not considered to be such a source of fuel unless they are in the presence of an OXYGEN RICH ENVIRONMENT. MANUFACTURERS should determine, through analyses documented in the RISK MANAGEMENT FILE, whether the ME EQUIPMENT contains combustible materials (fuel) in sufficient quantities to support combustion in conjunction with ignition sources (capable of releasing greater than 900 J).

Subclause 13.1.2

This subclause is clarified by the following:

As stated in subclause 4.7, it is the MANUFACTURER'S RISK ANALYSIS that determines which components are subject to failure testing based on the associated RISK. Where the associated RISK of fire exceeds the MANUFACTURER'S criteria for RISK acceptability, the MANUFACTURER'S simulation analysis (such as FMEAs) should be accepted in lieu of physical testing. As also stated in 4.7, component reliability and ratings are to be considered in such failure simulation analyses. Common electronic components that have a history of use without causing equipment fires should not be considered a likely source of ignition.

Where the subclause identifies "emission of flames, molten metal, poisonous or ignitable substance in hazardous quantities;" as a hazardous situation, this refers to emissions from *the ENCLOSURE* not from components themselves. Where it identifies "exceeding the allowable values for 'other components and materials' identified in Table 22 times 1,5 minus 12,5 °C", this applies only where doing so would result in an unacceptable RISK (as identified in the MANUFACTURER'S RISK ANALYSIS according to 4.7). Typically, this would be cases where

Copyright International Electrotechnical Commission
Provided by IHS Markit under license with IEC
No reproduction or networking permitted without license from IHS Not for Resale, 08/26/2020 19:12:41 MDT

ESSENTIAL PERFORMANCE would not be maintained or where greater than 900 J of energy would be released in the presence of flammable materials that could sustain combustion.

The first exemption to fault analysis or testing identified in subclause 13.1.2 (“The construction or the supply circuit limits the power dissipation in SINGLE FAULT CONDITION to less than 15 W or the energy dissipation to less than 900 J.”) is intended to apply where the component design itself (“The construction”) or fusing (or other current limiting devices) in the supply circuit (“or the supply circuit”) assure the energy released during failures will not exceed the limits. For most common signal level components rated for operation below 5 Watts, the energy released by short-circuiting of outputs will not exceed the 900 J limit.

This clarification will remain valid until a new version of IEC 60601-1 is published.

_____

January 2009 **ICS 11.040**

Copyright International Electrotechnical Commission
Provided by IHS Markit under license with IEC
No reproduction or networking permitted without license from IHS
Not for Resale, 08/26/2020 19:12:41 MDT

MEDICAL ELECTRICAL EQUIPMENT – Part 1: General requirements for basic safety and essential performance

INTERPRETATION SHEET 3

This interpretation sheet has been prepared by subcommittee 62A: Common aspects of electrical equipment used in medical practice, of IEC technical committee 62: Electrical equipment in medical practice.

The text of this interpretation sheet is based on the following documents:

ISH	Report on voting
62A/858/ISH	62A/875/RVD

Full information on the voting for the approval of this interpretation sheet can be found in the report on voting indicated in the above table.

Subclause 13.1.2 fourth dash (Emissions, deformation of ENCLOSURE or exceeding maximum temperature)

This subclause states the following:

The following HAZARDOUS SITUATIONS shall not occur:

– ....

– temperatures of ME EQUIPMENT parts that are not APPLIED PARTS but are likely to be touched, exceeding the allowable values in Table 23 when measured and adjusted as described in 11.1.3;

This is clarified by the following:

The above requirement is regarded as fulfilled in accordance with Subclause 4.5 for temperatures at the surfaces of the enclosure, if the following conditions are fulfilled:

– The maximum allowed temperature on OPERATOR accessible surfaces in SINGLE FAULT CONDITION is 105 °C; and

– the instructions for use contain a warning that, under some SINGLE FAULT CONDITIONS, the temperature of: (*indicate the surface of concern*) could get hot and there is a possible RISK of a burn if touched, and

– if the RISK ANALYSIS demonstrates a need for a warning symbol on the ENCLOSURE, safety sign ISO 7010-W018 ( ) shall be used on or adjacent to the hot spot on the ENCLOSURE; and

– the RISK ASSESSMENT demonstrates that the temperature attained in the SINGLE FAULT CONDITION is acceptable, and

– the RISK ASSESSMENT demonstrates that applying the alternative RISK CONTROL measures in this Interpretation Sheet results in a RESIDUAL RISK that is comparable to the RESIDUAL RISK resulting from applying the requirement of the standard.

NOTE 1 This Interpretation Sheet is intended to be used with both Edition 3.0 and Edition 3.1 of IEC 60601-1.

NOTE 2 An example of an analysis that demonstrates an adequately low probability of occurrence of HARM is shown below.

May 2013 ICS 11.040

Copyright International Electrotechnical Commission
Provided by IHS Markit under license with IEC
No reproduction or networking permitted without license from IHS
Not for Resale, 08/26/2020 19:12:41 MDT

Example RISK ASSESSMENT:

The sum failure rate for parts that could increase the surface temperature of parts of the enclosure of XYZ device touchable only by the OPERATOR to values above those of Table 23 calculates to be 60 FIT (1 FIT = 1E-9/h) according to the standard MIL-HDBK-217F where FIT stands for "failure in time". In case of such failures, the device would emit an odour and would no longer function properly. It is estimated, that only in one of 3 cases the device would not be switched off immediately and the hot surface would be resulting in a burn.

The resulting overall probability of such HARM where adequate warning is provided in the instructions for use in combination with warning sign ISO 7010 W018 would be: probability = 1/3 * 60 FIT = 2 E-8/h =approx. 0,0002 per year.

In this example, the WXW Company's RISK acceptance criteria require that a HARM of that severity must have a probability of less than 0,0003 per year for the associated RISK to be considered acceptable. Based on that RISK acceptance criterion, the RISK associated with overtemperature of the ENCLOSURE caused by single faults in the circuitry is acceptable.

Copyright International Electrotechnical Commission
Provided by IHS Markit under license with IEC
No reproduction or networking permitted without license from IHS
Not for Resale, 08/26/2020 19:12:41 MDT

CONTENTS

FOREWORD 11
INTRODUCTION 14
INTRODUCTION TO AMENDMENT 1 16
INTRODUCTION TO AMENDMENT 2 16
1 Scope, object and related standards 18
1.1 * Scope 18
1.2 Object 18
1.3 * Collateral standards 18
1.4 * Particular standards 18
2 * Normative references 19
3 * Terminology and definitions 22
4 General requirements 44
4.1 * Conditions for application to ME EQUIPMENT or ME SYSTEMS 44
4.2 * RISK MANAGEMENT PROCESS for ME EQUIPMENT or ME SYSTEMS 44
4.3 * ESSENTIAL PERFORMANCE 46
4.4 * EXPECTED SERVICE LIFE 47
4.5 * Alternative RISK CONTROL measures or test methods for ME EQUIPMENT or ME SYSTEMS 47
4.6 * ME EQUIPMENT or ME SYSTEM parts that contact the PATIENT 47
4.7 * SINGLE FAULT CONDITION for ME EQUIPMENT 48
4.8 * Components of ME EQUIPMENT 48
4.9 * Use of COMPONENTS WITH HIGH-INTEGRITY CHARACTERISTICS in ME EQUIPMENT 49
4.10 * Power supply 50
4.11 Power input 51
5 * General requirements for testing ME EQUIPMENT 51
5.1 * TYPE TESTS 51
5.2 * Number of samples 52
5.3 Ambient temperature, humidity, atmospheric pressure 52
5.4 Other conditions 52
5.5 Supply voltages, type of current, nature of supply, frequency 52
5.6 Repairs and modifications 53
5.7 * Humidity preconditioning treatment 53
5.8 Sequence of tests 54
5.9 * Determination of APPLIED PARTS and ACCESSIBLE PARTS 54
6 * Classification of ME EQUIPMENT and ME SYSTEMS 57
6.1 General 57
6.2 * Protection against electric shock 57
6.3 Protection against harmful ingress of water or particulate matter 57
6.4 Method(s) of sterilization 57
6.5 Suitability for use in an OXYGEN RICH ENVIRONMENT 57
6.6 * Mode of operation 57
7 ME EQUIPMENT identification, marking and documents 58
7.1 General 58
7.2 Marking on the outside of ME EQUIPMENT or ME EQUIPMENT parts (see also Table C.1) 59

Copyright International Electrotechnical Commission
Provided by IHS Markit under license with IEC
No reproduction or networking permitted without license from IHS
Not for Resale, 08/26/2020 19:12:41 MDT

7.3 Marking on the inside of ME EQUIPMENT or ME EQUIPMENT parts (see also Table C.2) 63
7.4 Marking of controls and instruments (see also Table C.3) 65
7.5 SAFETY SIGNS 67
7.6 Symbols 67
7.7 Colours of the insulation of conductors 68
7.8 * Indicator lights and controls 68
7.9 ACCOMPANYING DOCUMENTS 69
8 * Protection against electrical HAZARDS from ME EQUIPMENT 75
8.1 Fundamental rule of protection against electric shock 75
8.2 Requirements related to power sources 76
8.3 Classification of APPLIED PARTS 77
8.4 Limitation of voltage, current or energy 77
8.5 Separation of parts 80
8.6 * Protective earthing, functional earthing and potential equalization of ME EQUIPMENT 91
8.7 LEAKAGE CURRENTS and PATIENT AUXILIARY CURRENTS 94
8.8 Insulation 111
8.9 * CREEPAGE DISTANCES and AIR CLEARANCES 117
8.10 Components and wiring 132
8.11 MAINS PARTS, components and layout 133
9 * Protection against MECHANICAL HAZARDS of ME EQUIPMENT and ME SYSTEMS 139
9.1 MECHANICAL HAZARDS of ME EQUIPMENT 139
9.2 * MECHANICAL HAZARDS associated with moving parts 139
9.3 * MECHANICAL HAZARD associated with surfaces, corners and edges 145
9.4 * Instability HAZARDS 145
9.5 * Expelled parts HAZARD 150
9.6 Acoustic energy (including infra- and ultrasound) and vibration 150
9.7 * Pressure vessels and parts subject to pneumatic and hydraulic pressure 151
9.8 * MECHANICAL HAZARDS associated with support systems 154
10 * Protection against unwanted and excessive radiation HAZARDS 159
10.1 X-Radiation 159
10.2 Alpha, beta, gamma, neutron and other particle radiation 160
10.3 Microwave radiation 160
10.4 * Lasers 161
10.5 * Other visible electromagnetic radiation 161
10.6 * Infrared radiation 161
10.7 * Ultraviolet radiation 161
11 Protection against excessive temperatures and other HAZARDS 161
11.1 * Excessive temperatures in ME EQUIPMENT 161
11.2 * Fire prevention 165
11.3 * Constructional requirements for fire ENCLOSURES of ME EQUIPMENT 170
11.4 * ME EQUIPMENT and ME SYSTEMS intended for use with flammable anaesthetics 173
11.5 * ME EQUIPMENT and ME SYSTEMS intended for use in conjunction with flammable agents 173
11.6 Overflow, spillage, leakage, ingress of water or particulate matter, cleaning, disinfection, sterilization and compatibility with substances used with the ME EQUIPMENT 173

Copyright International Electrotechnical Commission
Provided by IHS Markit under license with IEC
No reproduction or networking permitted without license from IHS
Not for Resale, 08/26/2020 19:12:41 MDT

11.7 Biocompatibility of ME EQUIPMENT and ME SYSTEMS 175
11.8 * Interruption of the power supply / SUPPLY MAINS to ME EQUIPMENT 175
12 * Accuracy of controls and instruments and protection against hazardous outputs 176
12.1 Accuracy of controls and instruments 176
12.2 USABILITY of ME EQUIPMENT 176
12.3 ALARM SYSTEMS 176
12.4 Protection against hazardous output 176
13 * HAZARDOUS SITUATIONS and fault conditions for ME EQUIPMENT 177
13.1 Specific HAZARDOUS SITUATIONS 177
13.2 SINGLE FAULT CONDITIONS 179
14 * PROGRAMMABLE ELECTRICAL MEDICAL SYSTEMS (PEMS) 184
14.1 * General 184
14.2 * Documentation 185
14.3 * RISK MANAGEMENT plan 185
14.4 * PEMS DEVELOPMENT LIFE-CYCLE 185
14.5 * Problem resolution 185
14.6 RISK MANAGEMENT PROCESS 186
14.7 * Requirement specification 186
14.8 * Architecture 186
14.9 * Design and implementation 187
14.10 * VERIFICATION 187
14.11 * PEMS VALIDATION 187
14.12 * Modification 188
14.13 * PEMS intended to be incorporated into an IT-NETWORK 188
15 Construction of ME EQUIPMENT 189
15.1 * Arrangements of controls and indicators of ME EQUIPMENT 189
15.2 * Serviceability 189
15.3 Mechanical strength 189
15.4 ME EQUIPMENT components and general assembly 193
15.5 * MAINS SUPPLY TRANSFORMERS of ME EQUIPMENT and transformers providing separation in accordance with 8.5 198
16 * ME SYSTEMS 202
16.1 * General requirements for the ME SYSTEMS 202
16.2 * ACCOMPANYING DOCUMENTS of an ME SYSTEM 202
16.3 * Power supply 204
16.4 ENCLOSURES 204
16.5 * SEPARATION DEVICES 204
16.6 * LEAKAGE CURRENTS 204
16.7 * Protection against MECHANICAL HAZARDS 205
16.8 Interruption of the power supply to parts of an ME SYSTEM 206
16.9 ME SYSTEM connections and wiring 206
17 * Electromagnetic compatibility of ME EQUIPMENT and ME SYSTEMS 208
Annex A (informative) General guidance and rationale 209
Annex B (informative) Sequence of testing 325
Annex C (informative) Guide to marking and labelling requirements for ME EQUIPMENT and ME SYSTEMS 329
Annex D (informative) Symbols on marking (see Clause 7) 332

--`,,`,,`-`-`,,`,,`,`,,`---

Copyright International Electrotechnical Commission
Provided by IHS Markit under license with IEC
No reproduction or networking permitted without license from IHS
Not for Resale, 08/26/2020 19:12:41 MDT

Annex E (informative) Examples of the connection of the measuring device (MD) for measurement of the PATIENT LEAKAGE CURRENT and PATIENT AUXILIARY CURRENT (see 8.7) 341
Annex F (informative) Suitable measuring supply circuits 343
Annex G (normative) Protection against HAZARDS of ignition of flammable anaesthetic mixtures 346
Annex H (informative) PEMS structure, PEMS DEVELOPMENT LIFE-CYCLE and documentation 361
Annex I (informative) ME SYSTEMS aspects 369
Annex J (informative) Survey of insulation paths 375
Annex K (informative) Simplified PATIENT LEAKAGE CURRENT diagrams 378
Annex L (normative) Insulated winding wires for use without interleaved insulation 381
Annex M (normative) Reduction of pollution degrees 384
Bibliography 385
INDEX OF ABBREVIATIONS AND ACRONYMS 390
INDEX 392

Figure 1 – Detachable mains connection 24
Figure 2 – Example of the defined terminals and conductors 25
Figure 3 – Example of a CLASS I ME EQUIPMENT 26
Figure 4 – Example of a metal-enclosed CLASS II ME EQUIPMENT 26
Figure 5 – Schematic flow chart for component qualification (see 4.8) 50
Figure 6 – Standard test finger (see 5.9.2.1) 55
Figure 7 – Test hook (see 5.9.2.2) 56
Figure 8 – Test pin (see 8.4.2 d) 79
Figure 9 – Application of test voltage to bridged PATIENT CONNECTIONS for DEFIBRILLATION-PROOF APPLIED PARTS (see 8.5.5.1) 88
Figure 10 – Application of test voltage to individual PATIENT CONNECTIONS for DEFIBRILLATION-PROOF APPLIED PARTS (see 8.5.5.1) 89
Figure 11 – Application of test voltage to test the delivered defibrillation energy 91
Figure 12 – Example of a measuring device and its frequency characteristics 96
Figure 13 – Measuring circuit for EARTH LEAKAGE CURRENT of CLASS I ME EQUIPMENT, with or without APPLIED PART 99
Figure 14 – Measuring circuit for TOUCH CURRENT 100
Figure 15 – Measuring circuit for PATIENT LEAKAGE CURRENT from the PATIENT CONNECTION to earth 101
Figure 16 – Measuring circuit for PATIENT LEAKAGE CURRENT via the PATIENT CONNECTION(S) of an F-TYPE APPLIED PART to earth caused by an external voltage on the PATIENT CONNECTION(S) 102
Figure 17 – Measuring circuit for PATIENT LEAKAGE CURRENT from PATIENT CONNECTION(S) to earth caused by an external voltage on a SIGNAL INPUT/OUTPUT PART 103
Figure 18 – Measuring circuit for PATIENT LEAKAGE CURRENT from PATIENT CONNECTION(S) to earth caused by an external voltage on a metal ACCESSIBLE PART that is not PROTECTIVELY EARTHED 104
Figure 19 – Measuring circuit for PATIENT AUXILIARY CURRENT 105

--`,,`,,`-`-`,,`,,`,`,,`---
Copyright International Electrotechnical Commission
Provided by IHS Markit under license with IEC
No reproduction or networking permitted without license from IHS
Not for Resale, 08/26/2020 19:12:41 MDT

Figure 20 – Measuring circuit for total PATIENT LEAKAGE CURRENT with all PATIENT CONNECTIONS of all APPLIED PARTS of the same type (TYPE B APPLIED PARTS, TYPE BF APPLIED PARTS or TYPE CF APPLIED PARTS) connected together 106
Figure 21 – Ball-pressure test apparatus 117
Figure 22 – CREEPAGE DISTANCE and AIR CLEARANCE – Example 1 129
Figure 23 – CREEPAGE DISTANCE and AIR CLEARANCE – Example 2 129
Figure 24 – CREEPAGE DISTANCE and AIR CLEARANCE – Example 3 129
Figure 25 – CREEPAGE DISTANCE and AIR CLEARANCE – Example 4 130
Figure 26 – CREEPAGE DISTANCE and AIR CLEARANCE – Example 5 130
Figure 27 – CREEPAGE DISTANCE and AIR CLEARANCE – Example 6 130
Figure 28 – CREEPAGE DISTANCE and AIR CLEARANCE – Example 7 130
Figure 29 – CREEPAGE DISTANCE and AIR CLEARANCE – Example 8 131
Figure 30 – CREEPAGE DISTANCE and AIR CLEARANCE – Example 9 131
Figure 31 – CREEPAGE DISTANCE and AIR CLEARANCE – Example 10 131
Figure 32 – Ratio between HYDRAULIC TEST PRESSURE and MAXIMUM EQUIPMENT PRESSURE 153
Figure 33 – Body upper-carriage module 158
Figure 34 – Spark ignition test apparatus 167
Figure 35 – Maximum allowable current *I* as a function of the maximum allowable voltage *U* measured in a purely resistive circuit in an OXYGEN RICH ENVIRONMENT 168
Figure 36 – Maximum allowable voltage *U* as a function of the capacitance *C* measured in a capacitive circuit used in an OXYGEN RICH ENVIRONMENT 168
Figure 37 – Maximum allowable current *I* as a function of the inductance *L* measured in an inductive circuit in an OXYGEN RICH ENVIRONMENT 169
Figure 38 – Baffle 172
Figure 39 – Area of the bottom of an ENCLOSURE as specified in 11.3 b) 1) 173
Figure 40 – Identification of MEANS OF PATIENT PROTECTION and MEANS OF OPERATOR PROTECTION 81
Figure 41 – WORKING VOLTAGE measurement 86
Figure A.1 – Identification of ME EQUIPMENT, APPLIED PARTS and PATIENT CONNECTIONS in an ECG monitor 214
Figure A.2 – Example of the insulation of an F-TYPE APPLIED PART with the insulation incorporated in the ME EQUIPMENT 215
Figure A.3 – Identification of ME EQUIPMENT, APPLIED PARTS and PATIENT CONNECTIONS in a PATIENT monitor with invasive pressure monitoring facility 215
Figure A.4 – Identification of ME EQUIPMENT, APPLIED PARTS and PATIENT CONNECTIONS in a multifunction PATIENT monitor with invasive pressure monitoring facilities 216
Figure A.5 – Identification of APPLIED PARTS and PATIENT CONNECTIONS in an X-ray ME SYSTEM 217
Figure A.6 – Identification of ME EQUIPMENT, APPLIED PARTS and PATIENT CONNECTIONS in a transcutaneous electronic nerve stimulator (TENS) intended to be worn on the PATIENT'S belt and connected to electrodes applied to the PATIENT'S upper arm 218
Figure A.7 – Identification of ME EQUIPMENT or ME SYSTEM, APPLIED PARTS and PATIENT CONNECTIONS in a personal computer with an ECG module 219
Figure A.8 – Illustration of the relationship of HAZARD, sequence of events, HAZARDOUS SITUATION and HARM 222
Figure A.9 – Example of PATIENT ENVIRONMENT 227
Figure A.10 – Floating circuit 247

Copyright International Electrotechnical Commission
Provided by IHS Markit under license with IEC
No reproduction or networking permitted without license from IHS
Not for Resale, 08/26/2020 19:12:41 MDT

Figure A.11 – Interruption of a power-carrying conductor between ME EQUIPMENT parts in separate ENCLOSURES 249
Figure A.13 – Allowable protective earth impedance where the fault current is limited 264
Figure A.14 – Probability of ventricular fibrillation 270
Figure A.15 – Example of a measuring circuit for the PATIENT LEAKAGE CURRENT from a PATIENT CONNECTION to earth for ME EQUIPMENT with multiple PATIENT CONNECTIONS 275
Figure A.16 – Instability test conditions 288
Figure A.17 – Example of determining TENSILE SAFETY FACTOR using Table 21 294
Figure A.18 – Example of determining design and test loads 295
Figure A.19 – Example of human body mass distribution 295
Figure A.20 – Relationship of the terms used to describe equipment, ACCESSORIES or equipment parts 224
Figure A.21 – Example of ME EQUIPMENT having two different functions on one common APPLIED PART circuit 262
Figure A.22 – Maximum allowable temperature for surfaces and APPLIED PARTS at higher altitudes 300
Figure A.23 – Example of the needed MEANS OF OPERATOR PROTECTION between the terminals of an INTERNAL ELECTRICAL POWER SOURCE and a subsequent protective device 317
Figure A.24 – Example of Scenario 1 252
Figure A.25 – Example of Scenario 2 253
Figure A.26 – Procedure for determination of AIR CLEARANCE requirements IEC TR 62368-2:2019 [77], 5.4.2.1 (modified) 257
Figure E.1 – TYPE B APPLIED PART 341
Figure E.2 – TYPE BF APPLIED PART 341
Figure E.3 – TYPE CF APPLIED PART 342
Figure E.4 – PATIENT AUXILIARY CURRENT 342
Figure E.5 – Loading of the PATIENT CONNECTIONS if specified by the MANUFACTURER 342
Figure F.1 – Measuring supply circuit with one side of the SUPPLY MAINS at approximately earth potential 343
Figure F.2 – Measuring supply circuit with SUPPLY MAINS approximately symmetrical to earth potential 343
Figure F.3 – Measuring supply circuit for polyphase ME EQUIPMENT specified for connection to a polyphase SUPPLY MAINS 344
Figure F.4 – Measuring supply circuit for single-phase ME EQUIPMENT specified for connection to a polyphase SUPPLY MAINS 344
Figure F.5 – Measuring supply circuit for ME EQUIPMENT having a separate power supply unit or intended to receive its power from another equipment in an ME SYSTEM 345
Figure G.1– Maximum allowable current I_{ZR} as a function of the maximum allowable voltage U_{ZR} measured in a purely resistive circuit with the most flammable mixture of ether vapour with air 352
Figure G.2 – Maximum allowable voltage U_{ZC} as a function of the capacitance C_{max} measured in a capacitive circuit with the most flammable mixture of ether vapour with air 353
Figure G.3 – Maximum allowable current I_{ZL} as a function of the inductance L_{max} measured in an inductive circuit with the most flammable mixture of ether vapour with air 353

Copyright International Electrotechnical Commission
Provided by IHS Markit under license with IEC
No reproduction or networking permitted without license from IHS
Not for Resale, 08/26/2020 19:12:41 MDT

Figure G.4 – Maximum allowable current I_{ZR} as a function of the maximum allowable voltage U_{ZR} measured in a purely resistive circuit with the most flammable mixture of ether vapour with oxygen 357

Figure G.5 – Maximum allowable voltage U_{ZC} as a function of the capacitance C_{max} measured in a capacitive circuit with the most flammable mixture of ether vapour with oxygen 358

Figure G.6 – Maximum allowable current I_{ZL} as a function of the inductance L_{max} measured in an inductive circuit with the most flammable mixture of ether vapour with oxygen 359

Figure G.7 – Test apparatus 360

Figure H.1 – Examples of PEMS/ PESS structures 362

Figure H.2 – A PEMS DEVELOPMENT LIFE-CYCLE model 363

Figure H.3 – Not used 365

Figure H.4 – Example of potential parameters required to be specified for an IT-NETWORK 368

Figure I.1 – Example of the construction of a MULTIPLE SOCKET-OUTLET (MSO) 373

Figure I.2 – Examples of application of MULTIPLE SOCKET-OUTLETS (MSO) 374

Figure J.1 – Insulation example 1 375

Figure J.2 – Insulation example 2 375

Figure J.3 – Insulation example 3 375

Figure J.4 – Insulation example 4 376

Figure J.5 – Insulation example 5 376

Figure J.6 – Insulation example 6 377

Figure J.7 – Insulation example 7 377

Figure K.1 – ME EQUIPMENT with an ENCLOSURE made of insulating material 378

Figure K.2 – ME EQUIPMENT with an F-TYPE APPLIED PART 378

Figure K.3 – ME EQUIPMENT with an APPLIED PART and a SIGNAL INPUT/OUTPUT PART 379

Figure K.4 – ME EQUIPMENT with a PATIENT CONNECTION of a TYPE B APPLIED PART that is not PROTECTIVELY EARTHED 379

Figure K.5 – ME EQUIPMENT with a PATIENT CONNECTION of a TYPE BF APPLIED PART that is not PROTECTIVELY EARTHED 380

Table 1 – Units outside the SI units system that may be used on ME EQUIPMENT 66

Table 2 – Colours and meanings of indicator lights and alarm indicator lights for ME EQUIPMENT 69

Table 3 – * Allowable values of PATIENT LEAKAGE CURRENTS and PATIENT AUXILIARY CURRENTS under NORMAL CONDITION and SINGLE FAULT CONDITION 97

Table 4 – * Allowable values of PATIENT LEAKAGE CURRENTS under the special test conditions identified in 8.7.4.7 98

Table 5 – Legends of symbols for Figure 9 to Figure 11, Figure 13 to Figure 20, Figure A.15, Annexes E and F 107

Table 6 – Test voltages for solid insulation forming a MEANS OF PROTECTION 114

Table 7 – Test voltages for MEANS OF OPERATOR PROTECTION 115

Table 8 – Multiplication factors for AIR CLEARANCES for altitudes up to 5 000 m 118

Table 9 – Material group classification 119

Table 10 – MAINS TRANSIENT VOLTAGE 120

Table 11 – Not used 121

Copyright International Electrotechnical Commission
Provided by IHS Markit under license with IEC
No reproduction or networking permitted without license from IHS Not for Resale, 08/26/2020 19:12:41 MDT

Table 12 – Minimum CREEPAGE DISTANCES and AIR CLEARANCES providing MEANS OF PATIENT PROTECTION 122
Table 13 – Minimum AIR CLEARANCES providing MEANS OF OPERATOR PROTECTION from the MAINS PART 123
Table 14 – Additional AIR CLEARANCES for insulation in MAINS PARTS with PEAK WORKING VOLTAGES exceeding the peak value of the NOMINAL MAINS VOLTAGE [a] 124
Table 15 – Minimum AIR CLEARANCES for MEANS OF OPERATOR PROTECTION in SECONDARY CIRCUITS 125
Table 16 – Minimum CREEPAGE DISTANCES providing MEANS OF OPERATOR PROTECTION [a] 126
Table 17 – NOMINAL cross-sectional area of conductors of a POWER SUPPLY CORD 135
Table 18 – Testing of cord anchorages 136
Table 19 – MECHANICAL HAZARDS covered by this clause 139
Table 20 – Acceptable gaps [a] 141
Table 21 – Determination of TENSILE SAFETY FACTOR 154
Table 22 – Allowable maximum temperatures of parts 162
Table 23 – Allowable maximum temperatures for ACCESSIBLE PARTS that are likely to be touched 162
Table 24 – Allowable maximum temperatures for skin contact with ME EQUIPMENT APPLIED PARTS 163
Table 25 – Acceptable perforation of the bottom of an ENCLOSURE 172
Table 26 – * Temperature limits of motor windings 182
Table 27 – Maximum motor winding steady-state temperature 184
Table 28 – Mechanical strength test applicability 190
Table 29 – Drop height 191
Table 30 – Test torques for rotating controls 197
Table 31 – Maximum allowable temperatures of transformer windings under overload and short-circuit conditions at 25 °C (± 5 °C) ambient temperature 199
Table 32 – Test current for transformers 200
Table 33 – Test conditions for overtravel end stop test 144
Table 34 – Allowable maximum temperatures for ACCESSIBLE PARTS that are likely to be touched, but not intended to be touched to operate the ME EQUIPMENT 178
Table A.1 – Values of AIR CLEARANCE and CREEPAGE DISTANCE derived from Table 7 of IEC 61010-1:2001 and Table 12 279
Table A.2 – CREEPAGE DISTANCES to avoid failure due to tracking from IEC 60664-1 280
Table A.3 – Instability test conditions 287
Table A.4 – Allowable time exposure for level of acceleration 290
Table A.5 – Guidance on surface temperatures for ME EQUIPMENT that creates low temperatures (cools) for therapeutic purposes or as part of its operation 299
Table A.6 – Typical scenarios for the use of equipment complying with IEC 62368-1:2018 in ME EQUIPMENT 252
Table C.1– Marking on the outside of ME EQUIPMENT, ME SYSTEMS or their parts 329
Table C.2 – Marking on the inside of ME EQUIPMENT, ME SYSTEMS or their parts 330
Table C.3 – Marking of controls and instruments 330
Table C.4 – ACCOMPANYING DOCUMENTS, general 330
Table C.5 – ACCOMPANYING DOCUMENTS, instructions for use 331
Table D.1 – General symbols 333

Copyright International Electrotechnical Commission
Provided by IHS Markit under license with IEC
No reproduction or networking permitted without license from IHS
Not for Resale, 08/26/2020 19:12:41 MDT

Table D.2 – SAFETY SIGNS 338
Table D.3 – General codes 340
Table G.1 – Gas-tightness of cord inlets 355
Table H.1 – Not used 367
Table I.1 – Some examples of ME SYSTEMS for illustration 371
Table L.1– Mandrel diameter 382
Table L.2 – Oven temperature 382
Table M.1 – Reduction of the pollution degree of internal environment through the use of additional protection 384

--`,,```,,,,````-`-`,,`,,`,`,,`---

Copyright International Electrotechnical Commission
Provided by IHS Markit under license with IEC
No reproduction or networking permitted without license from IHS
Not for Resale, 08/26/2020 19:12:41 MDT

INTERNATIONAL ELECTROTECHNICAL COMMISSION

_____

MEDICAL ELECTRICAL EQUIPMENT –

Part 1: General requirements for basic safety and essential performance

FOREWORD

1) The International Electrotechnical Commission (IEC) is a worldwide organization for standardization comprising all national electrotechnical committees (IEC National Committees). The object of IEC is to promote international co-operation on all questions concerning standardization in the electrical and electronic fields. To this end and in addition to other activities, IEC publishes International Standards, Technical Specifications, Technical Reports, Publicly Available Specifications (PAS) and Guides (hereafter referred to as "IEC Publication(s)"). Their preparation is entrusted to technical committees; any IEC National Committee interested in the subject dealt with may participate in this preparatory work. International, governmental and non-governmental organizations liaising with the IEC also participate in this preparation. IEC collaborates closely with the International Organization for Standardization (ISO) in accordance with conditions determined by agreement between the two organizations.
2) The formal decisions or agreements of IEC on technical matters express, as nearly as possible, an international consensus of opinion on the relevant subjects since each technical committee has representation from all interested IEC National Committees.
3) IEC Publications have the form of recommendations for international use and are accepted by IEC National Committees in that sense. While all reasonable efforts are made to ensure that the technical content of IEC Publications is accurate, IEC cannot be held responsible for the way in which they are used or for any misinterpretation by any end user.
4) In order to promote international uniformity, IEC National Committees undertake to apply IEC Publications transparently to the maximum extent possible in their national and regional publications. Any divergence between any IEC Publication and the corresponding national or regional publication shall be clearly indicated in the latter.
5) IEC provides no marking procedure to indicate its approval and cannot be rendered responsible for any equipment declared to be in conformity with an IEC Publication.
6) All users should ensure that they have the latest edition of this publication.
7) No liability shall attach to IEC or its directors, employees, servants or agents including individual experts and members of its technical committees and IEC National Committees for any personal injury, property damage or other damage of any nature whatsoever, whether direct or indirect, or for costs (including legal fees) and expenses arising out of the publication, use of, or reliance upon, this IEC Publication or any other IEC Publications.
8) Attention is drawn to the Normative references cited in this publication. Use of the referenced publications is indispensable for the correct application of this publication.
9) Attention is drawn to the possibility that some of the elements of this IEC Publication may be the subject of patent rights. IEC shall not be held responsible for identifying any or all such patent rights.

This consolidated version of the official IEC Standard and its amendments has been prepared for user convenience.

IEC 60601-1 edition 3.2 contains the third edition (2005-12) [documents 62A/505A/FDIS and 62A/512/RVD], its amendment 1 (2012-07) [documents 62A/805/FDIS and 62A/820/RVD] and its amendment 2 (2020-08) [documents 62A/1389/FDIS and 62A/1404/RVD].

This Consolidated version includes the contents of the corrigenda 1 (2006-12) and 2 (2007-12), the contents of the corrigendum to Amendment 1 (2014-07), as well as the interpretation sheets 1 (2008-04), 2 (2009-01) and 3 (2013-05).

This Final version does not show where the technical content is modified by amendment 1. A separate Redline version with all changes highlighted is available in this publication.

--`,,```,,,,````-`-`,,`,,`,`,,`---

Copyright International Electrotechnical Commission
Provided by IHS Markit under license with IEC
No reproduction or networking permitted without license from IHS Not for Resale, 08/26/2020 19:12:41 MDT

International Standard IEC 60601-1 has been prepared by subcommittee 62A: Common aspects of electrical equipment used in medical practice, of IEC technical committee 62: Electrical equipment in medical practice.

This third edition cancels and replaces the second edition published in 1988, its Amendment 1 (1991) and Amendment 2 (1995), the second edition of IEC 60601-1-1 published in 2000 and the first edition of IEC 60601-1-4 published in 1996 and its Amendment 1 (1999). This edition constitutes a technical revision. This edition has been significantly restructured. Requirements in the electrical section have been further aligned with those for information technology equipment covered by IEC 60950-1 and a requirement for including a RISK MANAGEMENT PROCESS has been added. For an expanded description of this revision, see Annex A.3.

This publication has been drafted in accordance with the ISO/IEC Directives, Part 2.

In this standard the following print types are used:

- Requirements and definitions: in roman type.
- *Test specifications: in italic type.*
- Informative material appearing outside of tables, such as notes, examples and references: in smaller type. Normative text of tables is also in a smaller type.
- TERMS USED THROUGHOUT THIS STANDARD THAT HAVE BEEN DEFINED IN CLAUSE 3 AND ALSO GIVEN IN THE INDEX: IN SMALL CAPITALS.

In referring to the structure of this standard, the term

– “clause” means one of the seventeen numbered divisions within the table of contents, inclusive of all subdivisions (e.g. Clause 7 includes subclauses 7.1, 7.2, etc.);

– “subclause” means a numbered subdivision of a clause (e.g. 7.1, 7.2 and 7.2.1 are all subclauses of Clause 7).

References to clauses within this standard are preceded by the term “Clause” followed by the clause number. References to subclauses within this standard are by number only.

In this standard, the conjunctive “or” is used as an “inclusive or” so a statement is true if any combination of the conditions is true.

The verbal forms used in this standard conform to usage described in Annex G of the ISO/IEC Directives, Part 2. For the purposes of this standard, the auxiliary verb:

- “shall” means that compliance with a requirement or a test is mandatory for compliance with this standard;
- “should” means that compliance with a requirement or a test is recommended but is not mandatory for compliance with this standard;
- “may” is used to describe a permissible way to achieve compliance with a requirement or test.

An asterisk (*) as the first character of a title or at the beginning of a paragraph or table title indicates that there is guidance or rationale related to that item in Annex A.

The committee has decided that the contents of the base publication and its amendments will remain unchanged until the stability date indicated on the IEC web site under "http://webstore.iec.ch" in the data related to the specific publication. At this date, the publication will be

- reconfirmed,
- withdrawn,
- replaced by a revised edition, or
- amended.

Copyright International Electrotechnical Commission
Provided by IHS Markit under license with IEC
No reproduction or networking permitted without license from IHS Not for Resale, 08/26/2020 19:12:41 MDT

NOTE The attention of National Committees is drawn to the fact that equipment manufacturers and testing organizations may need a transitional period following publication of a new, amended or revised IEC or ISO publication in which to make products in accordance with the new requirements and to equip themselves for conducting new or revised tests. It is the recommendation of the committee that the content of this publication be adopted for mandatory implementation nationally not earlier than 3 years from the date of publication.

IMPORTANT – The "colour inside" logo on the cover page of this publication indicates that it contains colours which are considered to be useful for the correct understanding of its contents. Users should therefore print this publication using a colour printer.

Copyright International Electrotechnical Commission
Provided by IHS Markit under license with IEC
No reproduction or networking permitted without license from IHS
Not for Resale, 08/26/2020 19:12:41 MDT

INTRODUCTION

In 1976, IEC subcommittee 62A published the first edition of IEC/TR 60513, *Basic aspects of the safety philosophy for electrical equipment used in medical practice*. The first edition of IEC/TR 60513 provided the basis for developing:

– the first edition of IEC 60601-1 (the parent safety standard for MEDICAL ELECTRICAL EQUIPMENT);

– the IEC 60601-1-xx series of collateral standards for MEDICAL ELECTRICAL EQUIPMENT;

– the IEC 60601-2-xx series of particular standards for particular types of MEDICAL ELECTRICAL EQUIPMENT; and

– the IEC 60601-3-xx series of performance standards for particular types of MEDICAL ELECTRICAL EQUIPMENT.

Aware of the need and the urgency for a standard covering electrical equipment used in medical practice, the majority of National Committees voted in 1977 in favour of the first edition of IEC 60601-1, based on a draft that at the time represented a first approach to the problem. The extent of the scope, the complexity of the equipment concerned, and the specific nature of some of the protective measures and the corresponding tests for verifying them, required years of effort in order to prepare this first standard, which can now be said to have served as a universal reference since its publication.

However, the frequent application of the first edition revealed room for improvement. These improvements were all the more desirable in view of the considerable success that this standard has enjoyed since its publication.

The careful work of revision subsequently undertaken and continued over a number of years resulted in the publication of the second edition in 1988. This edition incorporated all the improvements that could be reasonably expected up to that time. Further developments remained under constant study. The second edition was amended in 1991 and then again in 1995.

The original IEC approach was to prepare separate BASIC SAFETY and performance standards for MEDICAL ELECTRICAL EQUIPMENT. This was a natural extension of the historical approach taken at the national and international level with other electrical equipment standards (e.g. those for domestic equipment), where BASIC SAFETY is regulated through mandatory standards but other performance specifications are regulated by market pressure. In this context, it has been said that, “The ability of an electric kettle to boil water is not critical to its safe use!”

It is now recognized that this is not the situation with many items of MEDICAL ELECTRICAL EQUIPMENT, and RESPONSIBLE ORGANIZATIONS have to depend on standards to ensure ESSENTIAL PERFORMANCE as well as BASIC SAFETY. Such areas include the accuracy with which the equipment controls the delivery of energy or therapeutic substances to the PATIENT, or processes and displays physiological data that will affect PATIENT management.

This recognition means that separating BASIC SAFETY and performance is somewhat inappropriate in addressing the HAZARDS that result from inadequate design of MEDICAL ELECTRICAL EQUIPMENT. Many particular standards in the IEC 60601-2-xx series address a range of ESSENTIAL PERFORMANCE requirements that cannot be directly evaluated by the RESPONSIBLE ORGANIZATION without applying such standards. (However, the current IEC 60601 series includes fewer requirements for ESSENTIAL PERFORMANCE than for BASIC SAFETY).

Copyright International Electrotechnical Commission
Provided by IHS Markit under license with IEC
No reproduction or networking permitted without license from IHS
Not for Resale, 08/26/2020 19:12:41 MDT

In anticipation of a third edition of IEC 60601-1, IEC subcommittee 62A prepared a second edition of IEC/TR 60513 [12][1)] in 1994. It was intended that the second edition of IEC/TR 60513 would provide guidance for developing this edition of IEC 60601-1, and for the further development of the IEC 60601-1-xx and IEC 60601-2-xx series.

In order to achieve consistency in international standards, address present expectations in the health care community and align with developments in IEC 60601-2-xx, the second edition of IEC/TR 60513 includes two major new principles:

– the first change is that the concept of "SAFETY" has been broadened from the BASIC SAFETY considerations in the first and second editions of IEC 60601-1 to include ESSENTIAL PERFORMANCE matters, (e.g. the accuracy of physiological monitoring equipment). Application of this principle leads to the change of the title of this publication from "Medical electrical equipment, Part 1: General requirements for safety" in the second edition, to "Medical electrical equipment, Part 1: General requirements for basic safety and essential performance";

– the second change is that, in specifying minimum safety requirements, provision is made for assessing the adequacy of the design PROCESS when this is the only practical method of assessing the safety of certain technologies such as programmable electronic systems. Application of this principle is one of the factors leading to introduction of a general requirement to carry out a RISK MANAGEMENT PROCESS. In parallel with the development of the third edition of IEC 60601-1, a joint project with ISO/TC 210 resulted in the publication of a general standard for RISK MANAGEMENT of medical devices. Compliance with this edition of IEC 60601-1 requires that the MANUFACTURER have in place a RISK MANAGEMENT PROCESS complying with parts of ISO 14971 (see 4.2).

This standard contains requirements concerning BASIC SAFETY and ESSENTIAL PERFORMANCE that are generally applicable to MEDICAL ELECTRICAL EQUIPMENT. For certain types of MEDICAL ELECTRICAL EQUIPMENT, these requirements are either supplemented or modified by the special requirements of a collateral or particular standard. Where particular standards exist, this standard should not be used alone.

Amendment 1 to this standard is intended to address:

– issues identified by National Committees and other interested parties since the publication of IEC 60601-1:2005;

– the way in which RISK MANAGEMENT has been introduced into IEC 60601-1:2005; and

– the way the concept of ESSENTIAL PERFORMANCE is used in IEC 60601-1:2005.

Throughout this document, there are many references to, and requirements incorporated from IEC 60950-1. Some of these requirements are derived from IEC 60950-1. For example, the requirements for spaces filled by insulating compound in 8.9.3. In other cases, the requirements are incorporated by a normative reference to IEC 60950-1:2005. For example, the requirements for solid insulation forming a MEANS OF OPERATOR PROTECTION in 8.5.1.3. The requirements incorporated by reference are primarily found in Clause 8 of this document, including many of the tables used to determine the requirements for MEANS OF PROTECTION, primarily MEANS OF OPERATOR PROTECTION and INSULATION CO-ORDINATION. The requirements incorporated by reference are addressed in Amendment 2. The derived requirements will be addressed during the development of the fourth edition of this document.

1) Figures in square brackets refer to the Bibliography.

--`,,```,,,,````-`-`,,`,,`,`,,`---

Copyright International Electrotechnical Commission
Provided by IHS Markit under license with IEC
No reproduction or networking permitted without license from IHS Not for Resale, 08/26/2020 19:12:41 MDT

INTRODUCTION TO AMENDMENT 1

The third edition of IEC 60601-1 was published in 2005. At the time of publication, there were 94 National Committee comments on the 2nd CDV and the FDIS that were deferred to a future amendment/revision. Each of their deferred comments was captured in an Issue Sheet by the SC 62A secretariat. By the time of the Auckland meeting in April 2008, the Subcommittees had developed two Interpretation Sheets and the SC 62A secretariat has received an additional 15 issues from National Committees and other interested parties.

At the Auckland meeting, IEC/TC 62 approved a project to develop the 1st amendment to IEC 60601-1:2005 based on the issues outstanding at the time. The TC approved developing the 1st amendment with a view to addressing outstanding issues, including but not limited to:

– those listed in 62A/593/DC and 62A/602/INF;
– the way in which risk management has been introduced into IEC 60601-1:2005; and
– the way the concept of essential performance is used in IEC 60601-1:2005.

Since the Auckland meeting, the secretariat has received 73 additional issues from National Committees or other interested parties for a total of 182 Issues Sheets. This amendment is intended to address those issues.

INTRODUCTION TO AMENDMENT 2

The third edition of IEC 60601-1 was published in 2005 and amended in 2012. Since the publication of IEC 60601-1:2005/AMD1:2012, the IEC Subcommittee (SC) 62A Secretariat has been collecting issues from a variety of sources including comments from National Committees and questions submitted to IEC/SC 62A/Working Group (WG) 14. At the November 2015 meeting of IEC/SC 62A in Kobe, Japan, the subcommittee initiated a process to identify high-priority issues that need to be considered in Amendment 2 and should not wait until the fourth edition of IEC 60601-1, which is presently targeted for publication sometime after 2024.

Those issues selected for inclusion on the final "short list" to be addressed in Amendment 2 were those approved by a 2/3 majority of the National Committees present and voting at the Frankfurt meeting of SC 62A. At the meeting held on 10 October 2016, 109 items were presented to the National Committees present. A total of 78 items received the required 2/3 majority of the National Committees present and voting and were included in the "short list" for consideration in preparing Amendment 2. All remaining issues have been placed on a "long list" for consideration in the fourth edition of IEC 60601-1.

The "short list" of issues was documented in the design specification for Amendment 2. The responsible expert groups were directed to consider each issue assigned to it in Clause 6 of the design specification and develop an appropriate solution for the identified problem. That final solution in this amendment can encompass any technical solution proposed by the author of the issue or it can involve a different solution developed by the expert group. The expert group can also have recommended that no change to the standard was justified by the problem statement.

Because this is an amendment to the 2005 edition of IEC 60601-1, the style in force at the time of publication of IEC 60601-1 has been applied to this amendment. The style specified in ISO/IEC Directives, Part 2:2018 has only been applied when implementing the new style guidance would not result in additional editorial changes. For example, notes to definitions are designated as "NOTE" rather than "Note to entry" in Clause 3.

Users of this document should note that when constructing the dated references to specific elements in a standard, such as definitions, amendments are only referenced if they modified

Copyright International Electrotechnical Commission
Provided by IHS Markit under license with IEC
No reproduction or networking permitted without license from IHS Not for Resale, 08/26/2020 19:12:41 MDT

the text being cited. For example, if a reference is made to a definition that has not been modified by an amendment, then the reference to the amendment is not included in the dated reference.

--`,,`,,`-`-`,,`,,`,`,,`---

Copyright International Electrotechnical Commission
Provided by IHS Markit under license with IEC
No reproduction or networking permitted without license from IHS Not for Resale, 08/26/2020 19:12:41 MDT

MEDICAL ELECTRICAL EQUIPMENT –

Part 1: General requirements for basic safety and essential performance

1 Scope, object and related standards

1.1 * Scope

This International Standard applies to the BASIC SAFETY and ESSENTIAL PERFORMANCE of MEDICAL ELECTRICAL EQUIPMENT and MEDICAL ELECTRICAL SYSTEMS, hereafter referred to as ME EQUIPMENT and ME SYSTEMS.

If a clause or subclause is specifically intended to be applicable to ME EQUIPMENT only, or to ME SYSTEMS only, the title and content of that clause or subclause will say so. If that is not the case, the clause or subclause applies both to ME EQUIPMENT and to ME SYSTEMS, as relevant.

HAZARDS inherent in the intended physiological function of ME EQUIPMENT or ME SYSTEMS within the scope of this standard are not covered by specific requirements in this standard except in 7.2.13 and 8.4.1.

NOTE 1 See also 4.2.

The IEC 60601 series does not apply to:

– in vitro diagnostic equipment that does not fall within the definition of ME EQUIPMENT, which is covered by the IEC 61010 series [61];

– implantable parts of active implantable medical devices covered by the ISO 14708 series [69]; or

– medical gas pipeline systems covered by ISO 7396-1 [68].

NOTE 2 ISO 7396-1 applies the requirement of IEC 60601-1-8 to certain monitoring and ALARM SIGNALS.

1.2 Object

The object of this standard is to specify general requirements and to serve as the basis for particular standards.

1.3 * Collateral standards

In the IEC 60601 series, collateral standards specify general requirements for BASIC SAFETY and ESSENTIAL PERFORMANCE applicable to:

– a subgroup of ME EQUIPMENT (e.g. radiological equipment);

– a specific characteristic of all ME EQUIPMENT not fully addressed in this standard.

Applicable collateral standards shall apply together with this standard.

NOTE 1 When evaluating compliance with IEC 60601-1, it is permissible to independently assess compliance with the collateral standards.

NOTE 2 When declaring compliance with IEC 60601-1, the declarer should specifically list the collateral standards that have been applied. This allows the reader of the declaration to understand which collateral standards were part of the evaluation.

NOTE 3 Collateral standards in the IEC 60601 family are numbered IEC 60601-1-xx. The IEC maintains a catalogue of valid International Standards. Users of this standard should consult this catalogue at "http://webstore.iec.ch" to determine which collateral standards have been published.

1.4 * Particular standards

In the IEC 60601 series, particular standards specify BASIC SAFETY and ESSENTIAL PERFORMANCE requirements for the particular ME EQUIPMENT and ME SYSTEMS. Particular standards may modify, replace or delete requirements contained in this standard and

Copyright International Electrotechnical Commission
Provided by IHS Markit under license with IEC
No reproduction or networking permitted without license from IHS Not for Resale, 08/26/2020 19:12:41 MDT

applicable collateral standards as appropriate for the particular ME EQUIPMENT and ME SYSTEMS under consideration.

NOTE Particular standards in the IEC 60601 family that are developed by IEC committees are numbered IEC 60601-2-xx. In addition, particular standards developed by joint projects between ISO and IEC can be numbered either IEC 80601-2-xx or ISO 80601-2-xx depending on which committee administered the project. IEC and ISO maintain catalogues of valid International Standards. Users of this standard should consult these catalogues at "http://webstore.iec.ch" and "http://www.iso.org/iso/store.htm" to determine which particular standards have been published.

A requirement of a particular standard takes priority over this standard and applicable collateral standards.

2 * Normative references

The following referenced documents are indispensable for the application of this document. For dated references, only the edition cited applies. For undated references, the latest edition of the referenced document (including any amendments) applies.

ATTENTION: Additional collateral standards of the IEC 60601 series, which are issued subsequent to publication of this standard, shall apply together with this standard when applicable. They shall be considered as being included among the normative references below. See 1.3.

NOTE Informative references are listed in the Bibliography on page 396.

IEC 60065:2001, *Audio, video and similar electronic apparatus – Safety requirements* [2)]
Amendment 1:2005
Amendment 2:2010

IEC 60068-2-2:2007, *Environmental testing – Part 2-2: Tests – Test B: Dry heat*

IEC 60079-0, *Electrical apparatus for explosive gas atmospheres – Part 0: General requirements*

IEC 60079-2, *Electrical apparatus for explosive gas atmospheres – Part 2: Pressurized enclosures "p"*

IEC 60079-5, *Electrical apparatus for explosive gas atmospheres – Part 5: Powder filling "q"*

IEC 60079-6, *Electrical apparatus for explosive gas atmospheres – Part 6: Oil-immersion "o"*

IEC 60083, *Plugs and socket-outlets for domestic and similar general use standardized in member countries of IEC*

IEC 60085, *Electrical insulation – Thermal classification*

IEC 60086-4, *Primary batteries – Part 4: Safety of lithium batteries*

IEC 60112, *Method for the determination of the proof and the comparative tracking indices of solid insulating materials*

IEC 60127-1, *Miniature fuses – Part 1: Definitions for miniature fuses and general requirements for miniature fuse-links*

IEC 60227-1:2007, *Polyvinyl chloride insulated cables of rated voltages up to and including 450/750 V – Part 1: General requirements*

---

2) There exists a consolidated edition 7.2 including IEC 60065:2001 and its Amendment 1 (2005) and Amendment 2 (2010).

--`,,```,,,,````-`-`,,`,,`,`,,`---

Copyright International Electrotechnical Commission
Provided by IHS Markit under license with IEC
No reproduction or networking permitted without license from IHS Not for Resale, 08/26/2020 19:12:41 MDT

IEC 60245-1:2003, *Rubber insulated cables – Rated voltages up to and including 450/750 V – Part 1: General requirements*[3]
Amendment 1:2007

IEC 60252-1, *AC motor capacitors – Part 1: General – Performance, testing and rating – Safety requirements – Guide for installation and operation*

IEC 60320-1, *Appliance couplers for household and similar general purposes – Part 1: General requirements*

IEC 60335-1:2010, *Household and similar electrical appliances – Safety – Part 1: General requirements*

IEC 60364-4-41, *Electrical installations of buildings – Part 4-41: Protection for safety – Protection against electric shock*

IEC 60384-14:2005, *Fixed capacitors for use in electronic equipment – Part 14: Sectional specification: Fixed capacitors for electromagnetic interference suppression and connection to the supply mains*

IEC 60417, *Graphical symbols for use on equipment.* Available from: <http://www.graphical-symbols.info/equipment>

IEC 60445, *Basic and safety principles for man-machine interface, marking and identification – Identification of equipment terminals and of terminations of certain designated conductors, including general rules for an alphanumeric system*

IEC 60447, *Basic and safety principles for man-machine interface, marking and identification – Actuating principles*

IEC 60529:1989, *Degrees of protection provided by enclosures (IP Code)* [4)]
Amendment 1 (1999)

IEC 60601-1-2:2014, *Medical electrical equipment – Part 1-2: General requirements for basic safety and essential performance – Collateral standard: Electromagnetic disturbances – Requirements and tests*
Amendment 1:2020

IEC 60601-1-3:2008, *Medical electrical equipment – Part 1-3: General requirements for basic safety and essential performance. Collateral standard: Radiation protection in diagnostic X-ray equipment*
Amendment 1:2013

IEC 60601-1-6:2010, *Medical electrical equipment – Part 1-6: General requirements for basic and essential performance – Collateral standard: Usability*
Amendment 1:2013
Amendment 2:2020

IEC 60601-1-8:2006, *Medical electrical equipment – Part 1-8: General requirements for basic safety and essential performance – Collateral standard: General requirements, tests and guidance for alarm systems in medical electrical equipment and medical electrical systems*
Amendment 1:2012
Amendment 2:2020

IEC 60664-1:2007, *Insulation coordination for equipment within low-voltage systems – Part 1: Principles, requirements and tests*
IEC 60695-11-10, *Fire hazard testing – Part 11-10: Test flames – 50 W horizontal and vertical flame test methods*

---

3) There exists a consolidated edition 4.1 including IEC 60245-1:2003 and its Amendment 1 (2007).

4) There exists a consolidated version 2.1, including IEC 60529:1989 and its Amendment 1 (1999).

--`,,```,,,,````-`-`,,`,,`,`,,`---

Copyright International Electrotechnical Commission
Provided by IHS Markit under license with IEC
No reproduction or networking permitted without license from IHS Not for Resale, 08/26/2020 19:12:41 MDT

IEC 60730-1:2010, *Automatic electrical controls for household and similar use – Part 1: General requirements*

IEC 60747-5-5:2007, *Semiconductor devices – Discrete devices – Part 5-5: Optoelectronic devices – Photocouplers*

IEC 60825-1:2014, *Safety of laser products – Part 1: Equipment classification and requirements*

IEC 60851-3:2009, *Winding wires – Test methods – Part 3: Mechanical properties*

IEC 60851-5:2008, *Winding wires – Test methods – Part 5: Electrical properties*

IEC 60851-6:1996, *Winding wires – Test methods – Part 6: Thermal properties*
Amendment 1 (1997)

IEC 60884-1, *Plugs and socket-outlets for household and similar purposes - Part 1: General requirements*

IEC 60950-1:2005, *Information technology equipment – Safety – Part 1: General requirements*
Amendment 1:2009
Amendment 2:2013

IEC 61058-1:2000*, Switches for appliances – Part 1: General requirements* [5)]
Amendment 1:2001
Amendment 2:2007

IEC 61558-2-1, *Safety transformers, power supply units and similar – Part 2: Particular requirements for separating transformers for general use*

IEC 61672-1, *Electroacoustics – Sound level meters – Part 1: Specifications*

IEC 61672-2, *Electroacoustics – Sound level meters – Part 2: Pattern evaluation tests*

IEC 61965, *Mechanical safety of cathode ray tubes*

IEC 62133, *Secondary cells and batteries containing alkaline or other non-acid electrolytes – Safety requirements for portable sealed secondary cells, and for batteries made from them, for use in portable applications*

IEC 62133-2, *Secondary cells and batteries containing alkaline or other non-acid electrolytes – Safety requirements for portable sealed secondary lithium cells, and for batteries made from them, for use in portable applications – Part 2: Lithium systems*

IEC 62304:2006, *Medical device software – Software life cycle processes*
Amendment 1:2015

IEC 62368-1:2018, *Audio/video, information and communication technology equipment – Part 1: Safety requirements*

ISO 780, *Packaging – Pictorial marking for handling of goods*

ISO 1853, *Conducting and dissipative rubbers, vulcanized or thermoplastic – Measurement of resistivity*

ISO 2878, *Rubber, vulcanized – Antistatic and conductive products – Determination of electrical resistance*

ISO 2882 [6)], *Rubber, vulcanized – Antistatic and conductive products for hospital use – Electrical resistance limits*

---

5) There exists a consolidated edition 3.2, including IEC 61058-1:2000 and its Amendment 1 (2001) and Amendment 2 (2007)

Copyright International Electrotechnical Commission
Provided by IHS Markit under license with IEC
No reproduction or networking permitted without license from IHS Not for Resale, 08/26/2020 19:12:41 MDT

ISO 3746, *Acoustics – Determination of sound power levels of noise sources using sound pressure – Survey method using an enveloping measurement surface over a reflecting plane*

ISO 3864-1:2002, *Graphical symbols – Safety colours and safety signs – Part 1: Design principles for safety signs in workplaces and public areas*

ISO 5349-1, *Mechanical vibration – Measurement and evaluation of human exposure to hand-transmitted vibration – Part 1: General requirements*

ISO 7000, *Graphical symbols for use on equipment*

ISO 7010:2019, *Graphical symbols – Safety colours and safety signs – Registered safety signs*

ISO 9614-1, *Acoustics – Determination of sound power levels of noise sources using sound intensity – Measurement at discrete points*

ISO 10993 (all parts), *Biological evaluation of medical devices*

ISO 11135-1:2007, *Sterilization of health care products – Ethylene oxide – Part 1: Requirements for development, validation and routine control of a sterilization process for medical devices*

ISO 11137-1:2006, *Sterilization of health care products – Radiation – Part 1: Requirements for development, validation and routine control of a sterilization process for medical devices*

ISO 13857:2008, *Safety of machinery – Safety distances to prevent hazard zones being reached by the upper and lower limbs*

ISO 14971:2019, *Medical devices – Application of risk management to medical devices*

ISO 15223-1:2016, *Medical devices – Symbols to be used with medical device labels, labelling and information to be supplied – Part 1: General requirements*

ISO 17665-1:2006, *Sterilization of health care products – Moist heat – Part 1: Requirements for the development, validation and routine control of a sterilization process for medical devices*

ISO 23529, *Rubber – General procedures for preparing and conditioning test pieces for physical test methods*

ISO 80000-1:2009, *Quantities and units – Part 1: General*

3 * Terminology and definitions

For the purposes of this document, the following terms and definitions apply.

NOTE 1 Where the terms “voltage” and “current” are used in this document, they mean the r.m.s. values of an alternating, direct or composite voltage or current unless stated otherwise.

NOTE 2 The term “electrical equipment” is used to mean ME EQUIPMENT (see 3.63) or other electrical equipment. This standard also uses the term “equipment” to mean ME EQUIPMENT or other electrical or non-electrical equipment in the context of an ME SYSTEM (see 3.64).

NOTE 3 When the term "safety" is used in this document in roman or italic type, it does not mean "safety" as defined in ISO 14971, but rather is used to mean "the state of being protected from or guarded against hurt or injury; freedom from danger”.

NOTE 4 An index is found beginning on page 402.

6) ISO 2882 was withdrawn on 1 February 2005 and no replacement standard has been identified.

Copyright International Electrotechnical Commission
Provided by IHS Markit under license with IEC
No reproduction or networking permitted without license from IHS Not for Resale, 08/26/2020 19:12:41 MDT

3.1
ACCESS COVER
part of an ENCLOSURE or GUARD providing the possibility of access to electrical equipment parts for the purpose of adjustment, inspection, replacement or repair

3.2
ACCESSIBLE PART
part of electrical equipment other than an APPLIED PART that can be touched by means of the standard test finger

NOTE See also 5.9.2.1.

3.3
ACCESSORY
additional part for use with equipment in order to:

– achieve the INTENDED USE,

– adapt it to some special use,

– facilitate its use,

– enhance its performance, or

– enable its functions to be integrated with those of other equipment

[IEC 60788:2004, rm-83-06 modified]

3.4
ACCOMPANYING DOCUMENT
document accompanying ME EQUIPMENT, an ME SYSTEM, equipment or an ACCESSORY and containing information for the RESPONSIBLE ORGANIZATION or OPERATOR, particularly regarding BASIC SAFETY and ESSENTIAL PERFORMANCE

3.5
AIR CLEARANCE
shortest path in air between two conductive parts

NOTE Adapted from IEC 60664-1:2007, definition 3.2.

3.6
APPLIANCE COUPLER
means enabling the connection of a flexible cord to electrical equipment without the use of a TOOL, consisting of two parts: a MAINS CONNECTOR and an APPLIANCE INLET

NOTE See Figure 1.

Copyright International Electrotechnical Commission
Provided by IHS Markit under license with IEC
No reproduction or networking permitted without license from IHS Not for Resale, 08/26/2020 19:12:41 MDT

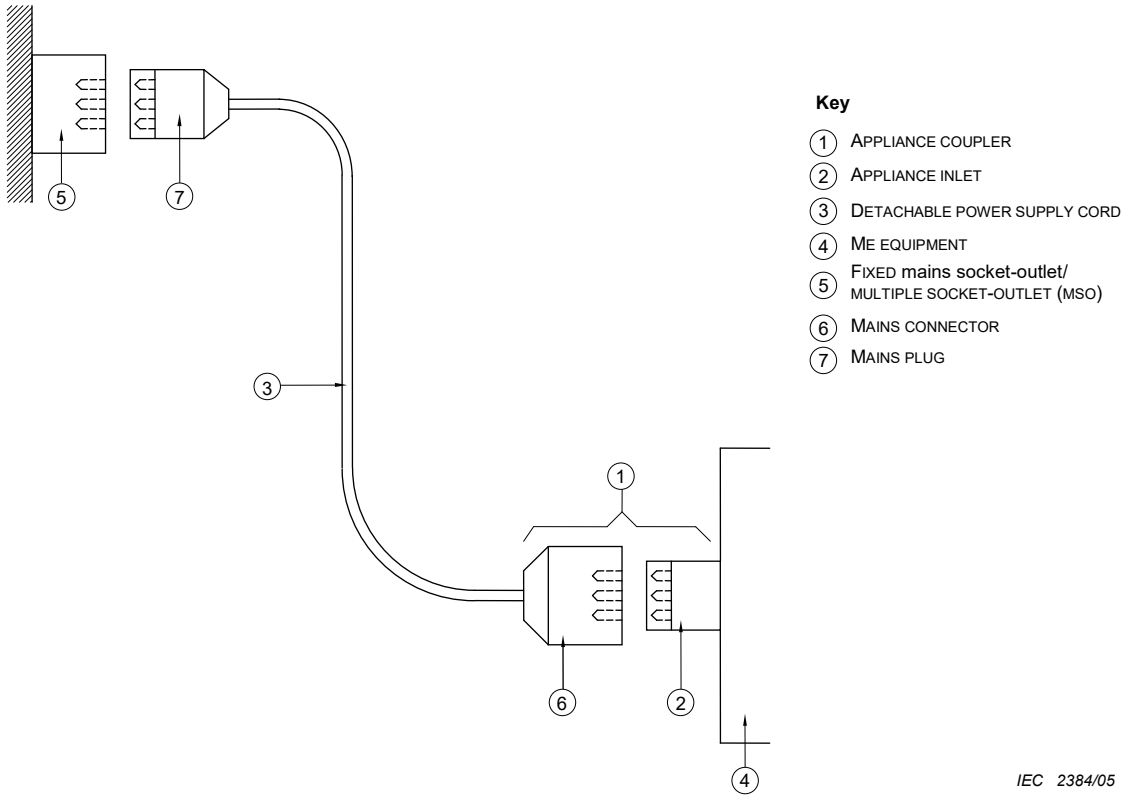

Figure 1 – Detachable mains connection
(see definitions)

3.7
APPLIANCE INLET
part of an APPLIANCE COUPLER either integrated in or FIXED to electrical equipment

NOTE See Figure 1 and Figure 2.

3.8
*** APPLIED PART**
part of ME EQUIPMENT that in NORMAL USE necessarily comes into physical contact with the PATIENT for ME EQUIPMENT or an ME SYSTEM to perform its function

NOTE 1 See Figure 3, Figure 4 and Figure A.1 to Figure A.7 (inclusive).

NOTE 2 See also 4.6 regarding the treatment of parts that do not fall within the definition of APPLIED PARTS but need to be treated as APPLIED PARTS as a result of applying the RISK MANAGEMENT PROCESS.

NOTE 3 See also 3.78 for the definition of the associated term PATIENT CONNECTION.

3.9
*** BASIC INSULATION**
insulation providing basic protection against electric shock

[IEV 826-12-14, modified]

NOTE BASIC INSULATION provides one MEANS OF PROTECTION.

--`,,```,,,,````-`-`,,`,,`,`,,`---
Copyright International Electrotechnical Commission
Provided by IHS Markit under license with IEC
No reproduction or networking permitted without license from IHS
Not for Resale, 08/26/2020 19:12:41 MDT

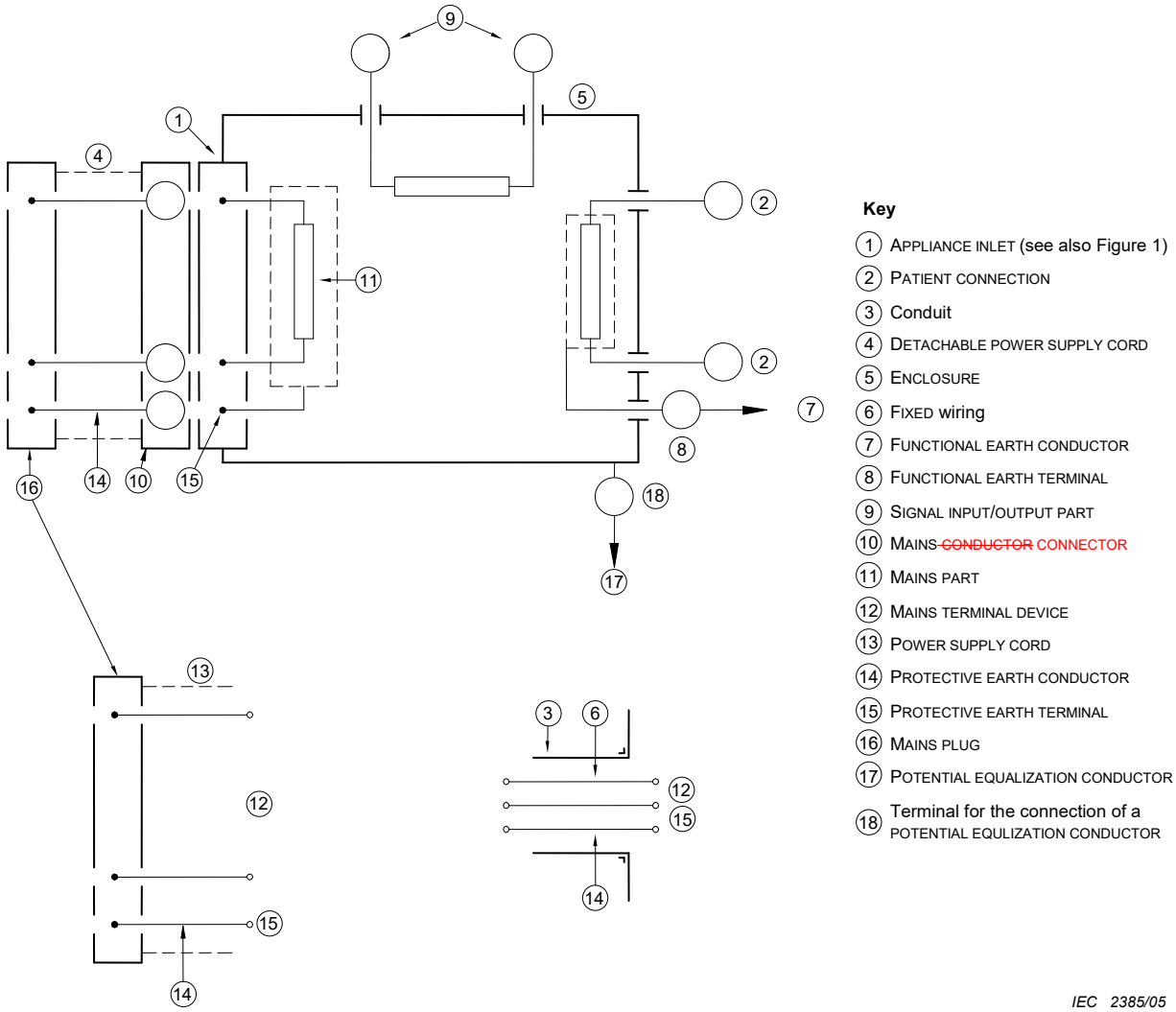

Figure 2 – Example of the defined terminals and conductors
(see definitions)

--`,,`,,`-`-`,,`,,`,`,,`---

Copyright International Electrotechnical Commission
Provided by IHS Markit under license with IEC
No reproduction or networking permitted without license from IHS
Not for Resale, 08/26/2020 19:12:41 MDT

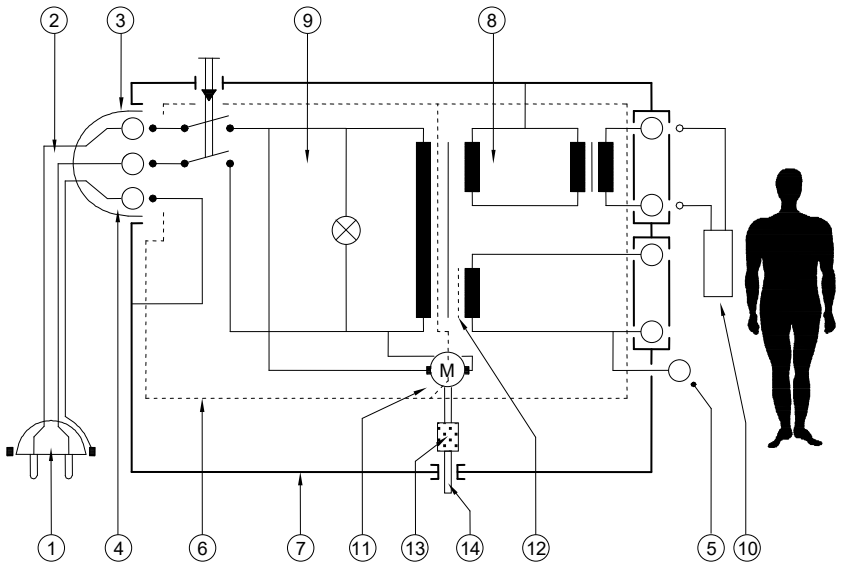

Key

1. MAINS PLUG with protective earth contact
2. DETACHABLE POWER SUPPLY CORD
3. APPLIANCE COUPLER
4. Protective earth contact and pin
5. FUNCTIONAL EARTH TERMINAL
6. BASIC INSULATION
7. ENCLOSURE
8. SECONDARY CIRCUIT
9. MAINS PART
10. APPLIED PART
11. Motor
12. PROTECTIVELY EARTHED screen
13. SUPPLEMENTARY INSULATION
14. Shaft that is an ACCESSIBLE PART

IEC 2386/05

Figure 3 – Example of a CLASS I ME EQUIPMENT
(see definitions)

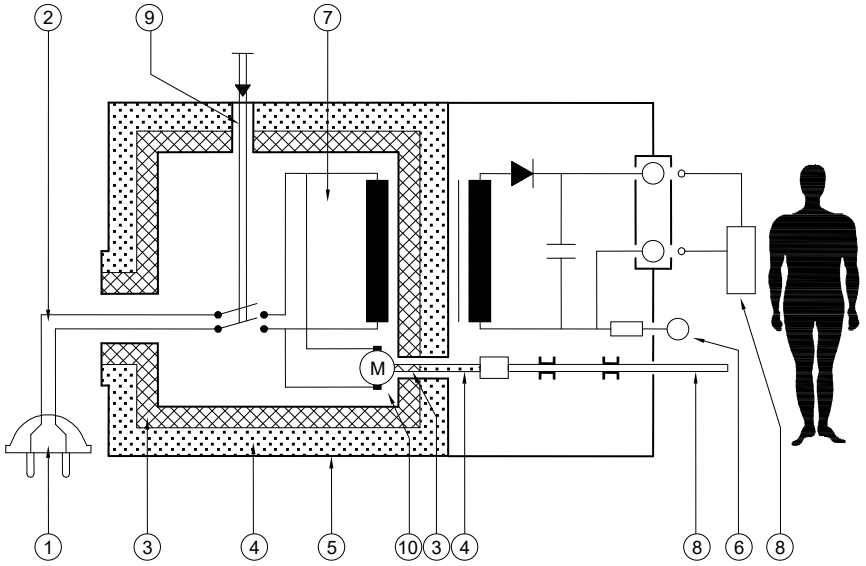

Key

1. MAINS PLUG
2. POWER SUPPLY CORD
3. BASIC INSULATION
4. SUPPLEMENTARY INSULATION
5. ENCLOSURE
6. FUNCTIONAL EARTH TERMINAL
7. MAINS PART
8. APPLIED PART
9. REINFORCED INSULATION
10. Motor

IEC 2387/05

Figure 4 – Example of a metal-enclosed CLASS II ME EQUIPMENT
(see definitions)

Copyright International Electrotechnical Commission
Provided by IHS Markit under license with IEC
No reproduction or networking permitted without license from IHS
Not for Resale, 08/26/2020 19:12:41 MDT

3.10
*** BASIC SAFETY**
freedom from unacceptable RISK directly caused by physical HAZARDS when ME EQUIPMENT is used under NORMAL CONDITION and SINGLE FAULT CONDITION

3.11
CATEGORY AP
rating for ME EQUIPMENT or an ME EQUIPMENT part complying with specified requirements on construction, marking and documentation in order to avoid sources of ignition in a FLAMMABLE ANAESTHETIC MIXTURE WITH AIR

3.12
CATEGORY APG
rating for ME EQUIPMENT or an ME EQUIPMENT part complying with specified requirements on construction, marking and documentation in order to avoid sources of ignition in a FLAMMABLE ANAESTHETIC MIXTURE WITH OXYGEN OR NITROUS OXIDE

3.13
CLASS I
term referring to electrical equipment in which protection against electric shock does not rely on BASIC INSULATION only, but which includes an additional safety precaution in that means are provided for ACCESSIBLE PARTS of metal or internal parts of metal to be PROTECTIVELY EARTHED

NOTE See Figure 3.

3.14
CLASS II
term referring to electrical equipment in which protection against electric shock does not rely on BASIC INSULATION only, but in which additional safety precautions such as DOUBLE INSULATION or REINFORCED INSULATION are provided, there being no provision for protective earthing or reliance upon installation conditions

NOTE 1 See Figure 4.

NOTE 2 CLASS II equipment can be provided with a FUNCTIONAL EARTH TERMINAL or a FUNCTIONAL EARTH CONDUCTOR. See also 8.6.8 and 8.6.9.

3.15
*** CLEARLY LEGIBLE**
capable of being read by a person with normal vision

NOTE See the test in 7.1.2.

3.16
COLD CONDITION
condition obtained if electrical equipment is de-energized for a sufficiently long time to attain the ambient temperature

3.17
*** COMPONENT WITH HIGH-INTEGRITY CHARACTERISTICS**
component where one or more characteristics ensure that its function is fault-free in relation to the safety requirements of this standard during the EXPECTED SERVICE LIFE of the ME EQUIPMENT in NORMAL USE and reasonably foreseeable misuse

3.18
*** CONTINUOUS OPERATION**
operation in NORMAL USE for an unlimited period of time without the specified limits of temperature being exceeded

Copyright International Electrotechnical Commission
Provided by IHS Markit under license with IEC
No reproduction or networking permitted without license from IHS Not for Resale, 08/26/2020 19:12:41 MDT

3.19
CREEPAGE DISTANCE
shortest distance along the surface of the insulating material between two conductive parts

[IEV 151-15-50, modified]

3.20
*** DEFIBRILLATION-PROOF APPLIED PART**
APPLIED PART that is protected against the effects of a discharge of a cardiac defibrillator to the PATIENT

3.21
*** DETACHABLE POWER SUPPLY CORD**
flexible cord intended to be connected to electrical equipment by means of a suitable APPLIANCE COUPLER for mains supply purposes

NOTE See Figure 1, Figure 2 and Figure 3.

3.22
*** DIRECT CARDIAC APPLICATION**
use of APPLIED PART that can come in direct contact with the PATIENT'S heart

3.23
*** DOUBLE INSULATION**
insulation comprising both BASIC INSULATION and SUPPLEMENTARY INSULATION

[IEV 195-06-08]

NOTE DOUBLE INSULATION provides two MEANS OF PROTECTION.

3.24
*** DUTY CYCLE**
maximum activation (on) time followed by minimum deactivation (off) time necessary for the safe operation of the ME EQUIPMENT

3.25
EARTH LEAKAGE CURRENT
current flowing from the MAINS PART through or across the insulation into the PROTECTIVE EARTH CONDUCTOR or a functional earthed connection according to 8.6.9

3.26
*** ENCLOSURE**
exterior surface of electrical equipment or parts thereof

NOTE For the purpose of testing to this standard, metal foil, with specified dimensions, applied in contact with parts of the exterior surface made of material with low conductivity or made of insulating material is considered a part of the ENCLOSURE (see Figure 2, Figure 3 and Figure 4).

3.27
*** ESSENTIAL PERFORMANCE**
performance of a clinical function, other than that related to BASIC SAFETY, where loss or degradation beyond the limits specified by the MANUFACTURER results in an unacceptable RISK

NOTE ESSENTIAL PERFORMANCE is most easily understood by considering whether its absence or degradation would result in an unacceptable RISK.

3.28
EXPECTED SERVICE LIFE
time period specified by the MANUFACTURER during which the ME EQUIPMENT or ME SYSTEM is expected to remain safe for use (i.e. maintain BASIC SAFETY and ESSENTIAL PERFORMANCE)

NOTE Maintenance can be necessary during the EXPECTED SERVICE LIFE.

--`,,```,,,,````-`-`,,`,,`,`,,`---
Copyright International Electrotechnical Commission
Provided by IHS Markit under license with IEC
No reproduction or networking permitted without license from IHS
Not for Resale, 08/26/2020 19:12:41 MDT

3.29
F-TYPE ISOLATED (FLOATING) APPLIED PART (herein F-TYPE APPLIED PART)
APPLIED PART in which the PATIENT CONNECTIONS are isolated from other parts of the ME EQUIPMENT to such a degree that no current higher than the allowable PATIENT LEAKAGE CURRENT flows if an unintended voltage originating from an external source is connected to the PATIENT, and thereby applied between the PATIENT CONNECTION and earth

NOTE F-TYPE APPLIED PARTS are either TYPE BF APPLIED PARTS or TYPE CF APPLIED PARTS.

3.30
FIXED
term meaning fastened or otherwise secured at a specific location either permanently or so that it can only be detached by means of a TOOL

EXAMPLE 1 Permanently affixed by welding, etc.

EXAMPLE 2 Affixed by means of fasteners (screws, nuts, etc.) making removal/opening impossible without using a TOOL.

NOTE See the taxonomy in the rationale for definition 3.63.

3.31
FLAMMABLE ANAESTHETIC MIXTURE WITH AIR
mixture of a flammable anaesthetic vapour with air in such a concentration that ignition can occur under specified conditions

3.32
FLAMMABLE ANAESTHETIC MIXTURE WITH OXYGEN OR NITROUS OXIDE
mixture of a flammable anaesthetic vapour with oxygen or with nitrous oxide in such a concentration that ignition can occur under specified conditions

3.33
*** FUNCTIONAL CONNECTION**
connection, electrical or otherwise, including those intended to transfer signals, data, power or substances

NOTE Connection to a FIXED SUPPLY MAINS socket-outlet, whether single or multiple, is not considered to result in a FUNCTIONAL CONNECTION.

3.34
FUNCTIONAL EARTH CONDUCTOR
conductor to be connected to a FUNCTIONAL EARTH TERMINAL

NOTE See Figure 2.

3.35
*** FUNCTIONAL EARTH TERMINAL**
terminal, directly connected to a circuit or to a screening part, that is intended to be earthed for functional purposes

NOTE See Figure 2, Figure 3 and Figure 4.

3.36
GUARD
part of equipment specifically used to provide protection by means of a physical barrier

NOTE Depending on its construction, a GUARD can be called a casing, cover, screen, door, enclosing guard, etc. A GUARD can act:

– alone; it is then only effective when it is in place;

– in conjunction with an interlocking device with or without guard locking; in this case, protection is ensured whatever the position of the GUARD.

Copyright International Electrotechnical Commission
Provided by IHS Markit under license with IEC
No reproduction or networking permitted without license from IHS Not for Resale, 08/26/2020 19:12:41 MDT

3.37
HAND-HELD
term referring to equipment that, once installed and placed into service, is intended to be supported by the hand

NOTE 1 Equipment can refer to ACCESSORIES or equipment parts.

NOTE 2 See the taxonomy in the rationale for definition 3.63.

3.38
*** HARM**
injury or damage to the health of people or animals, or damage to property or the environment

[ISO 14971:2019, definition 3.3, modified – "Or animals" added to the definition]

3.39
HAZARD
potential source of HARM

[ISO 14971:2019, definition 3.4]

3.40
*** HAZARDOUS SITUATION**
circumstance in which people, property, or the environment is/are exposed to one or more HAZARD(S)

[ISO 14971:2019, definition 3.5, modified – Note 1 to entry deleted.]

3.41
HIGH VOLTAGE
voltage over 1 000 V a.c. or over 1 500 V d.c. or over 1 500 V peak value

3.42
HYDRAULIC TEST PRESSURE
pressure applied to test a vessel or part of it

NOTE See 9.7.5.

3.43
INSULATION CO-ORDINATION
mutual correlation of insulation characteristics of electrical equipment taking into account the expected micro-environment and other influencing stresses

NOTE This includes insulation types, CREEPAGE DISTANCES, AIR CLEARANCES, distance through insulation, coatings, encapsulation, environmental aspects, etc.

3.44
INTENDED USE
INTENDED PURPOSE
use for which a product, PROCESS or service is intended according to the specifications, instructions and information provided by the MANUFACTURER

NOTE 1 The intended medical indication, PATIENT population, part of the body or type of tissue interacted with, user profile, use environment, and operating principle are typical elements of the INTENDED USE.

NOTE 2 INTENDED USE should not be confused with NORMAL USE. While both include the concept of use as intended by the MANUFACTURER, INTENDED USE focuses on the medical purpose while NORMAL USE incorporates not only the medical purpose, but maintenance, transport, etc. as well.

[ISO 14971:2019, definition 3.6, modified – Note 2 added.]

3.45
INTERNAL ELECTRICAL POWER SOURCE
electrical power source for operating equipment that is a part of the equipment and which produces electrical current from some other form of energy

EXAMPLE Chemical, mechanical, solar, or nuclear

Copyright International Electrotechnical Commission
Provided by IHS Markit under license with IEC
No reproduction or networking permitted without license from IHS Not for Resale, 08/26/2020 19:12:41 MDT

NOTE An INTERNAL ELECTRICAL POWER SOURCE can be inside the principal part of equipment, attached to the outside, or contained in a separate ENCLOSURE.

3.46
INTERNALLY POWERED
term referring to electrical equipment that is able to operate from an INTERNAL ELECTRICAL POWER SOURCE

3.47
LEAKAGE CURRENT
current that is not functional

NOTE The following LEAKAGE CURRENTS are defined: EARTH LEAKAGE CURRENT, TOUCH CURRENT and PATIENT LEAKAGE CURRENT.

3.48
MAINS CONNECTOR
part of an APPLIANCE COUPLER integral with or intended to be attached to a flexible cord that is intended to be connected to the SUPPLY MAINS

NOTE A MAINS CONNECTOR is intended to be inserted into the APPLIANCE INLET of electrical equipment (see Figure 1 and Figure 2).

3.49
*** MAINS PART**
part of electrical equipment forming a circuit that is intended to be connected to the SUPPLY MAINS

NOTE 1 The MAINS PART includes all conductive parts that are not separated from the SUPPLY MAINS by at least one MEANS OF PROTECTION.

NOTE 2 For the purpose of this definition, the PROTECTIVE EARTH CONDUCTOR is not regarded as a part of the MAINS PART (see Figure 2 and Figure 3).

3.50
*** MAINS PLUG**
part, integral with or intended to be attached to a POWER SUPPLY CORD of electrical equipment, to be inserted into a mains socket-outlet

NOTE 1 See Figure 1.

NOTE 2 See also IEC 60083 and IEC 60309-1 [8].

3.51
MAINS SUPPLY TRANSFORMER
static piece of equipment with two or more windings which, by electro-magnetic induction, transforms an alternating voltage and current from a SUPPLY MAINS into a voltage and current usually of different values at the same frequency

3.52
MAINS TERMINAL DEVICE
TERMINAL DEVICE by which the electrical connection to the SUPPLY MAINS is made

NOTE See Figure 2.

3.53
MAINS TRANSIENT VOLTAGE
highest peak voltage expected at the power input to the electrical equipment, arising from external transients on the SUPPLY MAINS

3.54
MAINS VOLTAGE
voltage of a SUPPLY MAINS between two line conductors of a polyphase system or voltage between the line conductor and the neutral conductor of a single-phase system

Copyright International Electrotechnical Commission
Provided by IHS Markit under license with IEC
No reproduction or networking permitted without license from IHS Not for Resale, 08/26/2020 19:12:41 MDT

3.55
MANUFACTURER
natural or legal person with responsibility for the design, manufacture, packaging, or labelling of ME EQUIPMENT, assembling an ME SYSTEM, or adapting ME EQUIPMENT or an ME SYSTEM, regardless of whether these operations are performed by that person or on his behalf by another person(s)

NOTE 1 ISO 13485 [30] defines “labelling” as "label, instructions for use, and any other information that is related to identification, technical description, INTENDED PURPOSE and proper use of the ME EQUIPMENT or ME SYSTEM, but excluding shipping documents".

NOTE 2 “Adapting” includes making substantial modifications to ME EQUIPMENT or an ME SYSTEM already in use.

NOTE 3 In some jurisdictions, the RESPONSIBLE ORGANIZATION can be considered a MANUFACTURER when involved in the activities described.

NOTE 4 Adapted from ISO 14971:2019, definition 3.9.

3.56
*** MAXIMUM MAINS VOLTAGE**
voltage used for test purposes related to the voltage of the SUPPLY MAINS and connected to certain ME EQUIPMENT parts

NOTE The value for MAXIMUM MAINS VOLTAGE is determined according to 8.5.3.

3.57
*** MAXIMUM PERMISSIBLE WORKING PRESSURE**
maximum pressure permitted on a component according to a declaration of the manufacturer of such component

3.58
*** MEANS OF OPERATOR PROTECTION**
MOOP
MEANS OF PROTECTION for reducing the RISK due to electric shock to persons other than the PATIENT

3.59
*** MEANS OF PATIENT PROTECTION**
MOPP
MEANS OF PROTECTION for reducing the RISK due to electric shock to the PATIENT

3.60
*** MEANS OF PROTECTION**
MOP
means for reducing the RISK due to electric shock in accordance with the requirements of this standard

NOTE MEANS OF PROTECTION include insulation, AIR CLEARANCES, CREEPAGE DISTANCES, impedances, and PROTECTIVE EARTH CONNECTIONS.

3.61
MECHANICAL HAZARD
HAZARD connected with or produced by physical force

3.62
MECHANICAL PROTECTIVE DEVICE
device that eliminates or reduces mechanical RISK to an acceptable level and which operates in the case of SINGLE FAULT CONDITION

Copyright International Electrotechnical Commission
Provided by IHS Markit under license with IEC
No reproduction or networking permitted without license from IHS Not for Resale, 08/26/2020 19:12:41 MDT

3.63
*** MEDICAL ELECTRICAL EQUIPMENT**
ME EQUIPMENT
electrical equipment having an APPLIED PART or transferring energy to or from the PATIENT or detecting such energy transfer to or from the PATIENT and which is:

a) provided with not more than one connection to a particular SUPPLY MAINS; and

b) intended by its MANUFACTURER to be used:

1) in the diagnosis, treatment, or monitoring of a PATIENT; or

2) for compensation or alleviation of disease, injury or disability

NOTE 1 ME EQUIPMENT includes those ACCESSORIES as defined by the MANUFACTURER that are necessary to enable the NORMAL USE of the ME EQUIPMENT.

NOTE 2 Not all electrical equipment used in medical practice falls within this definition (e.g. some in vitro diagnostic equipment).

NOTE 3 The implantable parts of active implantable medical devices can fall within this definition, but they are excluded from the scope of this standard by appropriate wording in Clause 1.

NOTE 4 This standard uses the term “electrical equipment” to mean ME EQUIPMENT or other electrical equipment.

NOTE 5 See also 4.10.1, 8.2.1 and 16.3.

3.64
*** MEDICAL ELECTRICAL SYSTEM**
ME SYSTEM
combination, as specified by its MANUFACTURER, of items of equipment, at least one of which is ME EQUIPMENT to be inter-connected by FUNCTIONAL CONNECTION or by use of a MULTIPLE SOCKET-OUTLET

NOTE Equipment, when mentioned in this standard, should be taken to include ME EQUIPMENT.

3.65
MOBILE
term referring to TRANSPORTABLE equipment that, once installed and placed into service, is intended to be moved from one location to another while supported by its own wheels or equivalent means

NOTE See the taxonomy in the rationale for definition 3.63.

3.66
*** MODEL OR TYPE REFERENCE**
combination of figures, letters or both used to identify a particular model of equipment or ACCESSORY

3.67
*** MULTIPLE SOCKET-OUTLET**
MSO
one or more socket-outlets intended to be connected to, or integral with, flexible cables, cords or ME EQUIPMENT providing SUPPLY MAINS or equivalent voltage

NOTE A MULTIPLE SOCKET-OUTLET can be a separate item or an integral part of equipment.

3.68
*** NETWORK/DATA COUPLING**
any means to transmit or receive information to or from other equipment in accordance with the MANUFACTURER’S specifications

3.69
NOMINAL (value)
value quoted for reference purposes that is subject to agreed tolerances

EXAMPLE NOMINAL MAINS VOLTAGE or NOMINAL diameter of a screw

--`,,```,,,,````-`-`,,`,,`,`,,`---

Copyright International Electrotechnical Commission
Provided by IHS Markit under license with IEC
No reproduction or networking permitted without license from IHS Not for Resale, 08/26/2020 19:12:41 MDT

3.70
NORMAL CONDITION
condition in which all means provided for protection against HAZARDS are intact

3.71
NORMAL USE
operation, including routine inspection and adjustments by any OPERATOR, and stand-by, according to the instructions for use

NOTE NORMAL USE should not be confused with INTENDED USE. While both include the concept of use as intended by the MANUFACTURER, INTENDED USE focuses on the medical purpose while NORMAL USE incorporates not only the medical purpose, but maintenance, transport, etc. as well.

3.72
OBJECTIVE EVIDENCE
data supporting the existence or verity of something

NOTE Objective evidence can be obtained through observation, measurement, testing or other means.

[ISO 14971:2019, definition 3.11]

3.73
*** OPERATOR**
person handling equipment

NOTE See also 3.101.

3.74
OVER-CURRENT RELEASE
protective device that causes a circuit to open, with or without time-delay, when the current in the device exceeds a predetermined value

[IEV 441-16-33, modified]

3.75
*** OXYGEN RICH ENVIRONMENT**
environment in which the concentration of oxygen is:

a) greater than 25 % for ambient pressures up to 110 kPa; or

b) the partial pressure of oxygen is greater than 27,5 kPa at ambient pressures exceeding 110 kPa

3.76
PATIENT
living being (person or animal) undergoing a medical, surgical or dental procedure

NOTE A PATIENT can be an OPERATOR.

3.77
*** PATIENT AUXILIARY CURRENT**
current flowing in the PATIENT in NORMAL USE between any PATIENT CONNECTION and all other PATIENT CONNECTIONS and not intended to produce a physiological effect

3.78
*** PATIENT CONNECTION**
individual point on the APPLIED PART through which current can flow between the PATIENT and the ME EQUIPMENT in NORMAL CONDITION or SINGLE FAULT CONDITION

3.79
*** PATIENT ENVIRONMENT**
any volume in which intentional or unintentional contact can occur between a PATIENT and parts of the ME EQUIPMENT or ME SYSTEM or between a PATIENT and other persons touching parts of the ME EQUIPMENT or ME SYSTEM

Copyright International Electrotechnical Commission
Provided by IHS Markit under license with IEC
No reproduction or networking permitted without license from IHS Not for Resale, 08/26/2020 19:12:41 MDT

3.80
PATIENT LEAKAGE CURRENT
current:

– flowing from the PATIENT CONNECTIONS via the PATIENT to earth; or

– originating from the unintended appearance of a voltage from an external source on the PATIENT and flowing from the PATIENT via the PATIENT CONNECTIONS of an F-TYPE APPLIED PART to earth

3.81
*** PEAK WORKING VOLTAGE**
highest peak or d.c. value of a WORKING VOLTAGE, including repetitive peak impulses generated in the electrical equipment, but not including external transients

[IEC 60950-1:2005, definition 1.2.9.8, modified]

3.82
PEMS DEVELOPMENT LIFE-CYCLE
necessary activities occurring during a period of time that starts at the concept phase of a project and finishes when the PEMS VALIDATION is complete

NOTE See also 3.90.

3.83
PEMS VALIDATION
PROCESS of evaluating a PEMS or a component of a PEMS during or at the end of the development PROCESS, to determine whether it satisfies the requirements for its INTENDED USE

NOTE See also 3.90.

3.84
PERMANENTLY INSTALLED
term meaning electrically connected to the SUPPLY MAINS by means of a permanent connection that can only be detached by the use of a TOOL

3.85
PORTABLE
term referring to TRANSPORTABLE equipment that, once installed and placed into service, is intended to be moved from one location to another while being carried by one or more persons

NOTE 1 Equipment can refer to ACCESSORIES or equipment parts.

NOTE 2 See the taxonomy in the rationale for definition 3.63.

3.86
POTENTIAL EQUALIZATION CONDUCTOR
conductor other than a PROTECTIVE EARTH CONDUCTOR or a neutral conductor, providing a direct connection between electrical equipment and the potential equalization busbar of the electrical installation

NOTE See Figure 2.

3.87
POWER SUPPLY CORD
flexible cord, FIXED to or assembled with electrical equipment for connection to SUPPLY MAINS

NOTE See Figure 1 to Figure 4 (inclusive).

3.88
PROCEDURE
specified way to carry out an activity or a PROCESS

[ISO 14971:2019, definition 3.13, modified – Note 1 to entry deleted.]

--`,```````,,`,``,,,,,,,,,```-`-`,,`,,`,`,,`---
Copyright International Electrotechnical Commission
Provided by IHS Markit under license with IEC
No reproduction or networking permitted without license from IHS
Not for Resale, 08/26/2020 19:12:41 MDT

3.89
PROCESS
set of interrelated or interacting activities that use inputs to deliver an intended result

NOTE 1 Whether the "intended result" of a PROCESS is called output, product or service depends on the context of the reference.

NOTE 2 Inputs to a PROCESS are generally the outputs of other PROCESSES and outputs of a PROCESS are generally the inputs to other PROCESSES.

NOTE 3 Two or more interrelated and interacting PROCESSES in series can also be referred to as a PROCESS.

[ISO 14971:2019, definition 3.14]

3.90
PROGRAMMABLE ELECTRICAL MEDICAL SYSTEM
PEMS
ME EQUIPMENT or an ME SYSTEM containing one or more PROGRAMMABLE ELECTRONIC SUBSYSTEMS (PESS)

3.91
PROGRAMMABLE ELECTRONIC SUBSYSTEM
PESS
system based on one or more central processing units, including their software and interfaces

3.92
PROPERLY INSTALLED
installed in accordance with the ACCOMPANYING DOCUMENTS

3.93
PROTECTIVE EARTH CONDUCTOR
conductor to be connected between the PROTECTIVE EARTH TERMINAL and an external protective earthing system

NOTE See Figure 2.

3.94
PROTECTIVE EARTH CONNECTION
connection to the PROTECTIVE EARTH TERMINAL provided for protective purposes and complying with the requirements of this standard

3.95
PROTECTIVE EARTH TERMINAL
terminal connected to conductive parts of CLASS I equipment for safety purposes. This terminal is intended to be connected to an external protective earthing system by a PROTECTIVE EARTH CONDUCTOR

NOTE See Figure 2.

3.96
PROTECTIVELY EARTHED
connected to the PROTECTIVE EARTH TERMINAL for protective purposes by means complying with the requirements of this standard

3.97
RATED (value)
term referring to a value assigned by the MANUFACTURER for a specified operating condition

3.98
RECORD
document stating results achieved or providing evidence of activities performed

NOTE 1 RECORDS can be used, for example, to formalize traceability and to provide evidence of VERIFICATION, preventive action and corrective action.

Copyright International Electrotechnical Commission
Provided by IHS Markit under license with IEC
No reproduction or networking permitted without license from IHS Not for Resale, 08/26/2020 19:12:41 MDT

NOTE 2 Generally RECORDS need not be under revision control.

[ISO 14971:2019, definition 3.16]

3.99
*** REINFORCED INSULATION**
single insulation system that provides two MEANS OF PROTECTION

3.100
RESIDUAL RISK
RISK remaining after RISK CONTROL measures have been implemented

[ISO 14971:2019, definition 3.17]

3.101
RESPONSIBLE ORGANIZATION
entity accountable for the use and maintenance of an ME EQUIPMENT or an ME SYSTEM

NOTE 1 The accountable entity can be, for example, a hospital, an individual clinician or a layperson. In home use applications, the PATIENT, OPERATOR and RESPONSIBLE ORGANIZATION can be one and the same person.

NOTE 2 Education and training is included in "use."

3.102
RISK
combination of the probability of occurrence of HARM and the SEVERITY of that HARM

[ISO 14971:2019, definition 3.18]

3.103
RISK ANALYSIS
systematic use of available information to identify HAZARDS and to estimate the RISK

[ISO 14971:2019, definition 3.19]

3.104
RISK ASSESSMENT
overall PROCESS comprising a RISK ANALYSIS and a RISK EVALUATION

[ISO 14971:2019, definition 3.20]

3.105
RISK CONTROL
PROCESS in which decisions are made and measures implemented by which RISKS are reduced to, or maintained within, specified levels

[ISO 14971:2019, definition 3.21]

3.106
RISK EVALUATION
PROCESS of comparing the estimated RISK against given RISK criteria to determine the acceptability of the RISK

[ISO 14971:2019, definition 3.23]

3.107
RISK MANAGEMENT
systematic application of management policies, PROCEDURES and practices to the tasks of analysing, evaluating, controlling and monitoring RISK

NOTE For the purposes of this standard, RISK MANAGEMENT does not include planning for or monitoring of production and post-production information; whereas this is required for compliance with ISO 14971 (see 4.2.2).

[ISO 14971:2019, definition 3.24, modified – NOTE added]

Copyright International Electrotechnical Commission
Provided by IHS Markit under license with IEC
No reproduction or networking permitted without license from IHS Not for Resale, 08/26/2020 19:12:41 MDT

3.108
RISK MANAGEMENT FILE
set of RECORDS and other documents that are produced by RISK MANAGEMENT

NOTE All safety related information including MANUFACTURER'S calculations, test results, etc. is considered to be part of the RISK MANAGEMENT FILE. See also 4.2.

[ISO 14971:2019, definition 3.25, modified – NOTE added]

3.109
SAFE WORKING LOAD
maximum external mechanical load (mass) on equipment or an equipment part that is permitted in NORMAL USE

3.110
*** SECONDARY CIRCUIT**
circuit which is separated from the MAINS PART by at least one MEANS OF PROTECTION and derives its power from a transformer, converter or equivalent isolation device, or from an INTERNAL ELECTRICAL POWER SOURCE

NOTE See also 8.9.1.12.

3.111
SELF-RESETTING THERMAL CUT-OUT
THERMAL CUT-OUT that automatically restores the current after the relevant part of electrical equipment has cooled

3.112
*** SEPARATION DEVICE**
component or arrangement of components with input parts and output parts that, for safety reasons, prevents a transfer of unwanted voltage or current between parts of an ME SYSTEM

3.113
SERVICE PERSONNEL
individuals or entity accountable to the RESPONSIBLE ORGANIZATION that install, assemble, maintain or repair ME EQUIPMENT, ME SYSTEMS or equipment

3.114
SEVERITY
measure of the possible consequences of a HAZARD

[ISO 14971:2019, definition 3.27]

3.115
*** SIGNAL INPUT/OUTPUT PART**
SIP/SOP
part of ME EQUIPMENT, not being an APPLIED PART, intended to deliver or receive signals to or from other electrical equipment, for example, for display, recording or data processing

NOTE See Figure 2.

3.116
SINGLE FAULT CONDITION
condition of ME EQUIPMENT in which a single means for reducing a RISK is defective or a single abnormal condition is present

NOTE See 4.7 and 13.2.

3.117
SINGLE FAULT SAFE
characteristic of ME EQUIPMENT or its parts whereby it remains free of unacceptable RISK during its EXPECTED SERVICE LIFE under SINGLE FAULT CONDITIONS

NOTE See 4.7.

Copyright International Electrotechnical Commission
Provided by IHS Markit under license with IEC
No reproduction or networking permitted without license from IHS Not for Resale, 08/26/2020 19:12:41 MDT

3.118
STATIONARY
term referring to equipment that, once installed and placed into service, is not intended to be moved from one place to another

NOTE See the taxonomy in the rationale for definition 3.63.

3.119
SUPPLEMENTARY INSULATION
independent insulation applied in addition to BASIC INSULATION in order to provide protection against electric shock in the event of a failure of BASIC INSULATION

[IEV 826-12-15, modified]

NOTE SUPPLEMENTARY INSULATION provides one MEANS OF PROTECTION.

3.120
*** SUPPLY MAINS**
source of electrical energy not forming part of ME EQUIPMENT or ME SYSTEM

NOTE This also includes battery systems and converter systems in ambulances and the like.

3.121
TENSILE SAFETY FACTOR
ratio between TENSILE STRENGTH and the stress corresponding to the TOTAL LOAD

3.122
TENSILE STRENGTH
maximum tensile stress a test piece will withstand before rupturing

3.123
TERMINAL DEVICE
part of electrical equipment by which electrical connection is made

NOTE A TERMINAL DEVICE can contain several individual contacts.

3.124
THERMAL CUT-OUT
device that, during an abnormal condition, limits the temperature of electrical equipment or of part of it, by automatically opening the circuit or by reducing the current, and that is so constructed that its setting cannot be altered except by qualified SERVICE PERSONNEL

3.125
THERMAL STABILITY
condition under which the temperature of an object does not increase by more than 2 °C over a period of 1 h

3.126
THERMOSTAT
temperature sensing control that is intended to keep a temperature within a specific range or above/below a preset value

3.127
TOOL
extra-corporeal object that can be used to secure or release fasteners or to make adjustments

NOTE Coins and keys are considered TOOLS within the context of this standard.

3.128
TOTAL LOAD
maximum total loading of a part including the maximum SAFE WORKING LOAD, where applicable, and the static and dynamic forces occurring in NORMAL USE

--`,,```,,,,````-`-`,,`,,`,`,,`---
Copyright International Electrotechnical Commission
Provided by IHS Markit under license with IEC
No reproduction or networking permitted without license from IHS Not for Resale, 08/26/2020 19:12:41 MDT

NOTE 1 Examples of dynamic forces include forces caused by acceleration or deceleration of masses.

NOTE 2 Where a load is divided over several parallel supporting parts and the distribution over these parts is not determined unequivocally, the least favourable possibility is to be considered.

3.129
TOUCH CURRENT

LEAKAGE CURRENT flowing from the ENCLOSURE or from parts thereof, excluding PATIENT CONNECTIONS, accessible to any OPERATOR or PATIENT in NORMAL USE, through an external path other than the PROTECTIVE EARTH CONDUCTOR, to earth or to another part of the ENCLOSURE

NOTE The meaning of this term is the same as that of "enclosure leakage current" in the first and second editions of this standard. The term has been changed to align with IEC 60950-1 and to reflect the fact that the measurement now applies also to parts that are normally PROTECTIVELY EARTHED.

3.130
TRANSPORTABLE

term referring to equipment that, once installed and placed into service, is intended to be moved from one place to another whether or not connected to a supply and without an appreciable restriction of range

EXAMPLE MOBILE equipment, PORTABLE equipment. and BODY-WORN equipment

NOTE See the taxonomy in the rationale for definition 3.63.

3.131
TRAPPING ZONE

accessible location on or within the ME EQUIPMENT, ME SYSTEM or in the equipment environment where a human body or a part of the human body is exposed to a trapping, crushing, shearing, impact, cutting, entanglement, drawing in, stabbing or abrasion HAZARD

3.132
*** TYPE B APPLIED PART**

APPLIED PART complying with the specified requirements of this standard to provide protection against electric shock, particularly regarding allowable PATIENT LEAKAGE CURRENT and PATIENT AUXILIARY CURRENT

NOTE 1 A TYPE B APPLIED PART is marked with symbol IEC 60417-5840 (2002-10) (see Table D.1, symbol 19) or, when applicable, with symbol IEC 60417-5841 (2002-10) (see Table D.1, symbol 25). See also 3.20.

NOTE 2 TYPE B APPLIED PARTS are not suitable for DIRECT CARDIAC APPLICATION.

NOTE 3 See also 4.6 regarding the treatment of parts that do not fall within the definition of APPLIED PARTS but need to be considered as APPLIED PARTS as a result of applying the RISK MANAGEMENT PROCESS.

3.133
*** TYPE BF APPLIED PART**

F-TYPE APPLIED PART complying with the specified requirements of this standard to provide a higher degree of protection against electric shock than that provided by TYPE B APPLIED PARTS

NOTE 1 A TYPE BF APPLIED PART is marked with symbol IEC 60417-5333 (2002-10) (see Table D.1, symbol 20) or, when applicable, with symbol 60417-5334 (2002-10) (see Table D.1, symbol 26). See also 3.20.

NOTE 2 TYPE BF APPLIED PARTS are not suitable for DIRECT CARDIAC APPLICATION.

NOTE 3 See also 4.6 regarding the treatment of parts that do not fall within the definition of APPLIED PARTS but need to be considered as APPLIED PARTS as a result of applying the RISK MANAGEMENT PROCESS.

3.134
*** TYPE CF APPLIED PART**

F-TYPE APPLIED PART complying with the specified requirements of this standard to provide a higher degree of protection against electric shock than that provided by TYPE BF APPLIED PARTS

NOTE 1 A TYPE CF APPLIED PART is marked with symbol IEC 60417-5335 (2002-10) (see Table D.1, symbol 21) or, when applicable, with symbol 60417-5336 (2002-10) (see Table D.1, symbol 27). See also 3.20.

NOTE 2 See also 4.6 regarding the treatment of parts that do not fall within the definition of APPLIED PARTS but need to be considered as APPLIED PARTS as a result of applying the RISK MANAGEMENT PROCESS.

NOTE 3 See the rationale for the definition of DIRECT CARDIAC APPLICATION (3.22) concerning the applied parts that need to be TYPE CF APPLIED PARTS.

Copyright International Electrotechnical Commission
Provided by IHS Markit under license with IEC
No reproduction or networking permitted without license from IHS Not for Resale, 08/26/2020 19:12:41 MDT

3.135
TYPE TEST
test on a representative sample of the equipment with the objective of determining if the equipment, as designed and manufactured, can meet the requirements of this standard

3.136
USABILITY
characteristic of the OPERATOR interface that facilitates use and thereby establishes effectiveness, efficiency, and OPERATOR satisfaction in the intended use environment

[IEC 62366-1:2015, definition 3.16, modified – Replace "user" with "OPERATOR" in two places and delete Note 1 to entry.]

3.137
USABILITY ENGINEERING
HUMAN FACTORS ENGINEERING
application of knowledge about human behaviour, abilities, limitations, and other characteristics to the design of ME EQUIPMENT (including software), systems and tasks to achieve adequate USABILITY

[IEC 62366-1:2007, definition 3.17, modified – Replace "medical devices" with "ME EQUIPMENT" and delete Note 1 to entry]

3.138
VERIFICATION
confirmation, through the provision of OBJECTIVE EVIDENCE that specified requirements have been fulfilled

NOTE 1 The OBJECTIVE EVIDENCE needed for a VERIFICATION can be the result of an inspection or of other forms of determination such as performing alternative calculations or reviewing documents.

NOTE 2 The activities carried out for VERIFICATION are sometimes called a qualification PROCESS.

NOTE 3 The word “verified” is used to designate the corresponding status.

[ISO 14971:2019, definition 2.31]

3.139
*** WORKING VOLTAGE**
highest voltage to which the insulation or the component under consideration is, or can be, subjected when the electrical equipment is operating under conditions of NORMAL USE

[IEC 60950-1:2005, definition 1.2.9.6]

3.140
AIR KERMA
K
quotient of dE_{tr} by dm, where dE_{tr} is the sum of the initial kinetic energies of all the charged particles liberated by uncharged particles in a mass dm of air, thus

$$K = \frac{dE_{tr}}{dm}$$

Unit: J kg^{-1}

The special name for the unit of AIR KERMA is gray (Gy) (ICRU 60)

[IEC 60601-1-3:2008, definition 3.4]

3.141
ALARM CONDITION
state of the ALARM SYSTEM when it has determined that a potential or actual HAZARDOUS SITUATION exists for which OPERATOR awareness or response is required

Copyright International Electrotechnical Commission
Provided by IHS Markit under license with IEC
No reproduction or networking permitted without license from IHS Not for Resale, 08/26/2020 19:12:41 MDT

NOTE 1 An ALARM CONDITION can be invalid, i.e. a false positive ALARM CONDITION.

NOTE 2 An ALARM CONDITION can be missed, i.e. a false negative ALARM CONDITION.

[IEC 60601-1-8:2006 / Amendment 1 (2012), definition 3.1]

3.142
ALARM SIGNAL
type of signal generated by the ALARM SYSTEM to indicate the presence (or occurrence) of an ALARM CONDITION

[IEC 60601-1-8:2006, definition 3.9]

3.143
ALARM SYSTEM
parts of ME EQUIPMENT or a ME SYSTEM that detect ALARM CONDITIONS and, as appropriate, generate ALARM SIGNALS

[IEC 60601-1-8:2006, definition 3.11]

3.144
BODY-WORN
term referring to TRANSPORTABLE equipment whose INTENDED USE includes operation while being worn by a PATIENT or attached to a PATIENT'S clothing

NOTE 1 TRANSPORTABLE equipment can be both BODY-WORN and HAND-HELD.

[IEC 60601-1-11:2010, definition 3.1]

NOTE 2 See the taxonomy in the rationale for definition 3.63.

3.145
IT-NETWORK
INFORMATION TECHNOLOGY NETWORK
a system or systems composed of communicating nodes and transmission links to provide physically linked or wireless transmission between two or more specified communication nodes

[IEC 80001-1:2010, definition 2.12]

3.146
PRIMARY OPERATING FUNCTION
function that involves OPERATOR interaction that is related to the safety of the ME EQUIPMENT

[IEC 62366-1:2015, definition 3.11, modified – Replace "user" with "OPERATOR" and "medical device" with "ME EQUIPMENT", and delete Note 1 to entry and Note 2 to entry.]

3.147
USABILITY ENGINEERING FILE
set of RECORDS and other documents that are produced by the USABILITY ENGINEERING PROCESS

[IEC 62366-1:2015, definition 3.18]

3.148
ELECTROMAGNETIC DISTURBANCE
EM DISTURBANCE
any electromagnetic phenomenon that could degrade the performance of a device, equipment or system

NOTE An ELECTROMAGNETIC DISTURBANCE can be electromagnetic noise, an unwanted signal or a change in the propagation medium itself.

[IEC 60601-1-2:2014, definition 3.3]

Copyright International Electrotechnical Commission
Provided by IHS Markit under license with IEC
No reproduction or networking permitted without license from IHS Not for Resale, 08/26/2020 19:12:41 MDT

3.149
HIGH PRIORITY
indicating that immediate OPERATOR response is required

NOTE 1 The priority is assigned through RISK ANALYSIS.

NOTE 2 Immediate implies the interruption of current workflow is expected.

[IEC 60601-1-8:2006 and IEC 60601-1-8:2006/AMD2:2020, definition 3.22, modified – Internal reference to IEC 60601-1-8, 6.1.2 in NOTE 1 deleted and bibliographic citations removed from NOTE 2.]

3.150
*** INFORMATION SIGNAL**
any signal that is not an ALARM SIGNAL or a reminder signal

EXAMPLE 1 ECG waveform

EXAMPLE 2 SpO2 tone

EXAMPLE 3 Fluoroscopy beam-on indication

NOTE An advisory is a type of INFORMATION SIGNAL.

[SOURCE: IEC 60601-1-8:2006 and IEC 60601-1-8:2006/AMD2:2020, definition 3.23]

3.151
LOW PRIORITY
indicating that OPERATOR awareness is required and future action might be needed

NOTE 1 The priority is assigned through RISK ANALYSIS.

NOTE 2 Awareness implies the planning of future workflow is expected.

[IEC 60601-1-8:2006/AMD2:2020, definition 3.27, modified – Internal reference to IEC 60601-1-8, 6.1.2 in NOTE 1 deleted and bibliographic citations removed from NOTE 2.]

3.152
*** MAXIMUM EQUIPMENT PRESSURE**
the maximum gauge pressure to which a part of ME EQUIPMENT can be subjected in NORMAL CONDITION and SINGLE FAULT CONDITION

3.153
MEDIUM PRIORITY
indicating that prompt OPERATOR response is required

NOTE 1 The priority is assigned through RISK ANALYSIS.

NOTE 2 Prompt implies the re-planning of current workflow is expected.

[IEC 60601-1-8:2006 and IEC 60601-1-8:2006/AMD2:2020, definition 3.28, modified – Internal reference to IEC 60601-1-8, 6.1.2 in NOTE 1 deleted and bibliographic citations removed from NOTE 2.]

3.154
SAFETY SIGN
sign giving a general safety message, obtained by a combination of a colour and geometric shape and which, by the addition of a graphical symbol, gives a general or particular safety message

Copyright International Electrotechnical Commission
Provided by IHS Markit under license with IEC
No reproduction or networking permitted without license from IHS Not for Resale, 08/26/2020 19:12:41 MDT

[ISO 7010:2019, definition 3.3, modified – Replace "gives a particular safety message" with " gives a general or particular safety message".]

4 General requirements

4.1 * Conditions for application to ME EQUIPMENT or ME SYSTEMS

Unless otherwise specified, the requirements of this standard shall apply in NORMAL USE and reasonably foreseeable misuse.

When applying this standard to ME EQUIPMENT or ME SYSTEMS intended for the compensation or alleviation of disease, injury or disability, the definitions and requirements that use the term PATIENT shall be considered as applying to the person for whom the ME EQUIPMENT or ME SYSTEM is intended.

4.2 * RISK MANAGEMENT PROCESS for ME EQUIPMENT or ME SYSTEMS

4.2.1 Introduction to RISK MANAGEMENT

Subclause 4.2 specifies the RISK MANAGEMENT PROCESS that is required for compliance with this standard. This RISK MANAGEMENT PROCESS is intended to serve the following purposes:

a) To identify whether the normative requirements specified in Clauses 5 to 17 of this standard, together with the requirements of applicable collateral and particular standards, address all the HAZARDS associated with the particular ME EQUIPMENT or ME SYSTEM under consideration.

b) To identify the way in which some particular tests specified in this standard should be applied to a particular ME EQUIPMENT or ME SYSTEM.

c) To identify whether particular HAZARDS or HAZARDOUS SITUATIONS for which this standard does not provide specific acceptance criteria result in any RISKS for a particular ME EQUIPMENT or ME SYSTEM, and, if so, to establish acceptable RISK levels and evaluate the RESIDUAL RISKS.

d) To evaluate the acceptability of alternative RISK CONTROL strategies by comparing RESIDUAL RISK with that achieved by applying the full requirements of this standard.

Although the RISK MANAGEMENT PROCESS specified in this standard is required to comply with the relevant requirements of ISO 14971:2019, it is not as extensive as and does not include all of the elements required for compliance with ISO 14971:2019. For example, the RISK MANAGEMENT PROCESS required for compliance with this standard does not include the production and post-production monitoring required in ISO 14971:2019. Furthermore, verification of compliance with the RISK MANAGEMENT requirements of this standard can be accomplished by examination of the RECORDS and other documentation required by this standard and assessment of the processes cited in this standard and does not require auditing of the RISK MANAGEMENT PROCESS.

4.2.2 General requirement for RISK MANAGEMENT

A RISK MANAGEMENT PROCESS complying with ISO 14971 shall be performed. For compliance with this standard, all elements of the ISO 14971:2019 RISK MANAGEMENT PROCESS shall be applied except:

– the planning for and execution of production and post-production monitoring (subclause 4.1, fourth dash, subclause 4.4, item g), and Clause 10 of ISO 14971:2019), and

– periodic reviews of the suitability of the RISK MANAGEMENT PROCESS (third paragraph of ISO 14971:2019, subclause 4.2).

When applying any of the requirements of ISO 14971:

Copyright International Electrotechnical Commission
Provided by IHS Markit under license with IEC
No reproduction or networking permitted without license from IHS Not for Resale, 08/26/2020 19:12:41 MDT

– the term “medical device” shall assume the same meaning as ME EQUIPMENT or ME SYSTEM; and

– the term “fault conditions” referred to in ISO 14971 shall include, but shall not be limited to, SINGLE FAULT CONDITIONS identified in this standard.

NOTE 1 This standard specifies requirements that are generally applicable to RISKS associated with the ME EQUIPMENT or ME SYSTEMS. Those requirements are intended to facilitate the RISK MANAGEMENT PROCESS. The RISK MANAGEMENT PROCESS is aimed at identifying not only those HAZARDS addressed by this standard, but all HAZARDS, their associated RISKS and RISK CONTROL measures.

NOTE 2 Conditions or faults that can give rise to HAZARDOUS SITUATIONS are identified in the clauses of this standard. In these cases, it will often be necessary to carry out a RISK MANAGEMENT PROCESS to determine what the actual HAZARDOUS SITUATIONS are and the tests that need to be done to show that the identified HAZARDOUS SITUATIONS do not arise in the specified circumstances.

NOTE 3 It is recognized that the MANUFACTURER might not be able to follow all the PROCESSES identified in this standard for each constituent component of the ME EQUIPMENT or ME SYSTEM, such as proprietary components, subsystems of non-medical origin, and legacy devices. In this case, the MANUFACTURER would need to take special account of the need for additional RISK CONTROL measures.

NOTE 4 Where requirements of this standard refer to freedom from unacceptable RISK, acceptability or unacceptability of this RISK is determined by the MANUFACTURER in accordance with the MANUFACTURER’S policy for determining acceptable RISK.

NOTE 5 Not all the RISKS associated with the ME EQUIPMENT or ME SYSTEM are subject to specific requirements of this standard (see 1.1).

Compliance is checked by:

– *inspection of the MANUFACTURER'S policy for determining criteria for RISK acceptability;*

– *inspection of the RISK MANAGEMENT plan for the particular ME EQUIPMENT or ME SYSTEM under consideration; and*

– *confirming the MANUFACTURER has prepared a RISK MANAGEMENT FILE containing the RISK MANAGEMENT RECORDS and other documentation required by this standard for the particular ME EQUIPMENT or ME SYSTEM under consideration.*

NOTE 6 It is helpful to keep an index containing references or pointers to the RISK MANAGEMENT RECORDS and other documentation required by this standard.

4.2.3 Evaluating RISK

4.2.3.1 HAZARDS identified in the IEC 60601-series

The requirements of this standard shall be applied in the following way when evaluating RISK:

a) Where this standard or its collateral or particular standards specify requirements addressing particular HAZARDS or HAZARDOUS SITUATIONS, together with specific acceptance criteria, compliance with these requirements is presumed to establish that the RESIDUAL RISKS have been reduced to acceptable levels unless there is OBJECTIVE EVIDENCE to the contrary.

   EXAMPLE 1 Subclause 8.5.1.2, MEANS OF PATIENT PROTECTION (MOPP)

   EXAMPLE 2 Subclause 9.4.2.1, Instability in transport position

   Compliance is checked by satisfying the relevant requirements of this standard and its collateral and particular standards.

b) Where this standard or its collateral or particular standards specify requirements addressing particular HAZARDS or HAZARDOUS SITUATIONS but do not provide specific acceptance criteria, the MANUFACTURER shall provide the acceptance criteria defined in the RISK MANAGEMENT plan. These acceptance criteria shall ensure that the RESIDUAL RISK is acceptable according to the criteria for RISK acceptability recorded in the RISK MANAGEMENT plan.

   EXAMPLE 3 Subclause 9.8.3.3, Dynamic forces due to loading from persons

   EXAMPLE 4 Subclause 11.6.3, Spillage on ME EQUIPMENT and ME SYSTEMS

Copyright International Electrotechnical Commission
Provided by IHS Markit under license with IEC
No reproduction or networking permitted without license from IHS Not for Resale, 08/26/2020 19:12:41 MDT

Compliance is checked by confirming that the RECORDS in the RISK MANAGEMENT FILE demonstrate that, after applying the specific requirements of this standard, the acceptance criteria determined by the MANUFACTURER are satisfied. Only the relevant parts of the RISK MANAGEMENT FILE need to be reviewed, e.g. the *MANUFACTURER'S calculations or test results, or the determination of RISK acceptability.*

c) Where this standard or its collateral or particular standards identify particular HAZARDS or HAZARDOUS SITUATIONS that have to be investigated without providing specific technical requirements:

- the MANUFACTURER shall determine whether such HAZARDS or HAZARDOUS SITUATIONS exist for the particular ME EQUIPMENT or ME SYSTEM, and
- where such HAZARDS or HAZARDOUS SITUATIONS exist for the particular ME EQUIPMENT or ME SYSTEM, the MANUFACTURER shall evaluate and (if necessary) control these RISKS following the RISK MANAGEMENT PROCESS specified in 4.2.2.

EXAMPLE 5 Subclause 10.2, Alpha, beta, gamma, neutron and other particle radiation

Compliance is checked by confirming that the RECORDS in the RISK MANAGEMENT FILE demonstrate that the RESIDUAL RISK is acceptable using the criteria for RISK acceptability recorded in the RISK MANAGEMENT plan, i.e. no unacceptable RISK remains. Only the relevant parts of the RISK MANAGEMENT FILE need to be reviewed, e.g. the MANUFACTURER'S calculations or test results, or the determination of RISK acceptability.

NOTE When ME EQUIPMENT or an ME SYSTEM has been designed in such way that for a certain type of HAZARDS no HAZARDOUS SITUATION exists, no further RISK ASSESSMENT for that HAZARD is necessary. This can be verified by tests or inspections.

4.2.3.2 HAZARDS not identified in the IEC 60601 series

For HAZARDS or HAZARDOUS SITUATIONS that are identified for the particular ME EQUIPMENT or ME SYSTEM but are not specifically addressed in this standard or its collateral or particular standards, the MANUFACTURER shall address those HAZARDS in the RISK MANAGEMENT PROCESS as specified in 4.2.2.

EXAMPLE ME EQUIPMENT or an ME SYSTEM for which there are particular RISKS but no particular standard.

Compliance is checked by inspection of the RISK MANAGEMENT FILE.

4.3 * ESSENTIAL PERFORMANCE

During RISK ANALYSIS, the MANUFACTURER shall identify the performance of the clinical function(s) of the ME EQUIPMENT or ME SYSTEM, other than that related to BASIC SAFETY, that is necessary to achieve its INTENDED USE or that could affect the safety of the ME EQUIPMENT or ME SYSTEM.

The MANUFACTURER shall then specify performance limits between fully functional and total loss of the identified performance in both NORMAL CONDITION and SINGLE FAULT CONDITION.

The MANUFACTURER shall then evaluate the RISK from the loss or degradation of the identified performance beyond the limits specified by the MANUFACTURER. If the resulting RISK is unacceptable, then the identified performance constitutes an ESSENTIAL PERFORMANCE of the ME EQUIPMENT or ME SYSTEM.

The MANUFACTURER shall implement RISK CONTROL measures to reduce the RISK from the loss or degradation of the identified performance to an acceptable level.

NOTE 1 The performance of the RISK CONTROL measure might well become an aspect of the ESSENTIAL PERFORMANCE of the ME EQUIPMENT or ME SYSTEM. For example, the generation of the ALARM SIGNAL to indicate the interruption of the SUPPLY MAINS could be “essential” if an interruption of the SUPPLY MAINS could result in an unacceptable RISK if it went unattended.

Copyright International Electrotechnical Commission
Provided by IHS Markit under license with IEC
No reproduction or networking permitted without license from IHS Not for Resale, 08/26/2020 19:12:41 MDT

The MANUFACTURER shall specify the methods used to verify the effectiveness of the RISK CONTROL measures. This shall include any assessment made to determine whether verification is needed.

NOTE 2 Following the principles of RISK MANAGEMENT, the MANUFACTURER is required to verify the effectiveness of each RISK CONTROL measure. This can involve demonstrating that the RISK CONTROL measure will operate in the presence of the conditions that result in the loss or degradation of the identified performance.

EXAMPLE 1 If ESSENTIAL PERFORMANCE is lost because of an interruption of the SUPPLY MAINS, an ALARM SYSTEM intended to notify the OPERATOR that the SUPPLY MAINS has been interrupted would need to have a backup power source so that the generation of the ALARM SIGNAL would not depend on the SUPPLY MAINS.

EXAMPLE 2 If the failure of a component results in the loss of ESSENTIAL PERFORMANCE, the design of the ME EQUIPMENT or ME SYSTEM would need to be such that the component failure does not compromise the effectiveness of any RISK CONTROL measures put in place to mitigate the RISK from the loss of the ESSENTIAL PERFORMANCE.

NOTE 3 Each collateral standard or particular standard in the IEC 60601 or the IEC/ISO 80601 series can list potential ESSENTIAL PERFORMANCES to guide the MANUFACTURER to identify particular ESSENTIAL PERFORMANCE in accordance with 4.3.

Compliance is checked by inspection of the RISK MANAGEMENT FILE.

Where this standard requires that ESSENTIAL PERFORMANCE is to be maintained following a particular test, compliance is checked by inspection and, if necessary, by functional test(s) that demonstrate the MANUFACTURER'S specified limits are maintained or the ME EQUIPMENT or ME SYSTEM transitions to a safe state as defined by the MANUFACTURER.

4.4 * EXPECTED SERVICE LIFE

The MANUFACTURER shall state the EXPECTED SERVICE LIFE of the ME EQUIPMENT or ME SYSTEM in the RISK MANAGEMENT FILE.

Compliance is checked by inspection of the RISK MANAGEMENT FILE.

4.5 * Alternative RISK CONTROL measures or test methods for ME EQUIPMENT or ME SYSTEMS

Where this standard specifies a particular RISK CONTROL measure or test method, an alternative RISK CONTROL measure or test method is acceptable, provided that the MANUFACTURER can demonstrate through scientific data or clinical opinion or comparative studies that the RESIDUAL RISK that results from applying the alternative RISK CONTROL measure or test method remains acceptable and is comparable to the RESIDUAL RISK that results from applying the requirements of this standard.

Comparative studies in this context mean studies comparing the effect of the alternative RISK CONTROL measure or test method with the RISK CONTROL measure or test method specified in this standard.

NOTE Alternative RISK CONTROL measures can allow for exceeding limits specified in this standard or in its collateral or particular standards if additional measures for compensation are provided.

Compliance is checked by inspection of the RISK MANAGEMENT FILE.

4.6 * ME EQUIPMENT or ME SYSTEM parts that contact the PATIENT

The RISK MANAGEMENT PROCESS shall include an assessment of whether parts that can come into contact with the PATIENT but fall outside of the definition of APPLIED PARTS need to be subject to the requirements for APPLIED PARTS. For the parts concerned, the requirements for TYPE B APPLIED PART shall be applied unless the assessment identifies a need for the requirements for a TYPE BF APPLIED PART or TYPE CF APPLIED PART to apply.

If the RISK MANAGEMENT PROCESS determines that such parts are subject to the requirements for APPLIED PARTS, then all the relevant requirements and tests of this standard and of relevant collateral and particular standards shall apply, except that 7.2.10 does not apply to such parts.

Compliance is checked by inspection of the RISK MANAGEMENT FILE.

--`,,```,,,,````-`-`,,`,,`,`,,`---

Copyright International Electrotechnical Commission
Provided by IHS Markit under license with IEC
No reproduction or networking permitted without license from IHS Not for Resale, 08/26/2020 19:12:41 MDT

4.7 * SINGLE FAULT CONDITION for ME EQUIPMENT

ME EQUIPMENT shall be so designed and manufactured that it remains SINGLE FAULT SAFE, or the RISK remains acceptable as determined through application of 4.2.

NOTE 1 The NORMAL CONDITIONS identified in 8.1 a) are taken into consideration during evaluation of compliance with any requirement of this standard that they might affect.

ME EQUIPMENT is considered SINGLE FAULT SAFE if:

a) it employs a single means for reducing a RISK that has a negligible probability of failure (e.g. REINFORCED INSULATION, suspended masses without MECHANICAL PROTECTIVE DEVICES employing a TENSILE SAFETY FACTOR of 8X, COMPONENT WITH HIGH-INTEGRITY CHARACTERISTICS), or

b) a SINGLE FAULT CONDITION occurs, but:

- the initial fault will be detected during the EXPECTED SERVICE LIFE of the ME EQUIPMENT and before a second means for reducing a RISK fails (e.g. suspended masses with MECHANICAL PROTECTIVE DEVICES); or
- the probability that the second means of reducing the RISK will fail during the EXPECTED SERVICE LIFE of the ME EQUIPMENT is negligible.

Where a SINGLE FAULT CONDITION causes another SINGLE FAULT CONDITION, the two failures are considered as one SINGLE FAULT CONDITION.

During any test under SINGLE FAULT CONDITION, only one fault at a time shall be applied.

NOTE 2 Faults are generally divided into 3 probability categories:

a) so remote that they can be ignored. The RISKS arising from these faults are considered acceptable;

b) probable enough that they need to be considered, but improbable enough that they need only be considered one at a time (single fault). Faults of this category include all those identified as SINGLE FAULT CONDITIONS in this standard, and any other faults identified in applying ISO 14971 that meet the SINGLE FAULT CONDITION criteria;

c) so likely, so unpredictable or undetectable that they are considered to be a NORMAL CONDITION and need to be considered individually and collectively.

The results of the RISK ANALYSIS shall be used to determine which failures shall be tested. The failure of any one component at a time that could result in a HAZARDOUS SITUATION, including those mentioned in 13.1, shall be simulated, physically or theoretically. The evaluation of whether a component is subject to failure simulation shall take into account the RISK associated with the failure of the component during the EXPECTED SERVICE LIFE of the ME EQUIPMENT. This evaluation shall be accomplished by applying the principles of RISK MANAGEMENT. The evaluation shall take into account issues such as reliability, TENSILE SAFETY FACTORS and rating of components. Additionally, during the simulation of SINGLE FAULT CONDITIONS, component failures that are highly probable or undetectable shall be simulated.

NOTE 3 See also Note 2 in 4.2.

This requirement and relevant tests shall not be applied to failures of DOUBLE or REINFORCED INSULATION or COMPONENTS WITH HIGH-INTEGRITY CHARACTERISTICS.

Compliance is determined by applying the specific requirements and tests associated with the SINGLE FAULT CONDITIONS identified in 13.2, and tests for the failures identified from evaluation of the results of the RISK ANALYSIS. Compliance is confirmed if the introduction of any of the SINGLE FAULT CONDITIONS described in 13.2, one at a time, does not lead directly to the HAZARDOUS SITUATIONS described in 13.1, or any other outcome that results in an unacceptable RISK.

4.8 * Components of ME EQUIPMENT

All components, including wiring, the failure of which could result in a HAZARDOUS SITUATION shall be used in accordance with their specified ratings unless a specific exception is made in this standard or through the RISK MANAGEMENT PROCESS. The reliability of components that are used as MEANS OF PROTECTION shall be assessed for the conditions of use in the ME EQUIPMENT. They shall comply with one of the following (see also 4.5):

Copyright International Electrotechnical Commission
Provided by IHS Markit under license with IEC
No reproduction or networking permitted without license from IHS Not for Resale, 08/26/2020 19:12:41 MDT

a) the applicable safety requirements of a relevant IEC or ISO standard;

NOTE 1 For the components, it is not necessary to carry out identical or equivalent tests already performed to check compliance with the component standard.

b) where there is no relevant IEC or ISO standard, the requirements of this standard have to be applied.

NOTE 2 If there are neither requirements in this standard nor in an IEC or ISO standard, any other applicable source (e.g. standards for other types of devices, national standards) could be used to demonstrate compliance with the RISK MANAGEMENT PROCESS.

See Figure 5 for a schematic flow chart for a) and b).

Compliance is checked by inspection and, where necessary, by test. The tests of this standard for motors (see 13.2.8 and 13.2.13.3) and transformers (see 15.5.3) are considered to be comprehensive and together with the evaluation of the motor or transformer insulation system according to Table 22 represent all testing required by this standard. ME SYSTEM components that provide isolation from non-ME EQUIPMENT are evaluated to Clause 16.

4.9 * Use of COMPONENTS WITH HIGH-INTEGRITY CHARACTERISTICS in ME EQUIPMENT

A COMPONENT WITH HIGH-INTEGRITY CHARACTERISTICS shall be used when a fault in a particular component can generate an unacceptable RISK. COMPONENTS WITH HIGH-INTEGRITY CHARACTERISTICS shall be selected and evaluated consistent with their conditions of use and reasonably foreseeable misuse during the EXPECTED SERVICE LIFE of the ME EQUIPMENT.

Compliance is checked by inspection of the RISK MANAGEMENT FILE and the selection criteria for the COMPONENTS WITH HIGH-INTEGRITY CHARACTERISTICS.

--`,,```,,,,````-`-`,,`,,`,`,,`---

Copyright International Electrotechnical Commission
Provided by IHS Markit under license with IEC
No reproduction or networking permitted without license from IHS Not for Resale, 08/26/2020 19:12:41 MDT

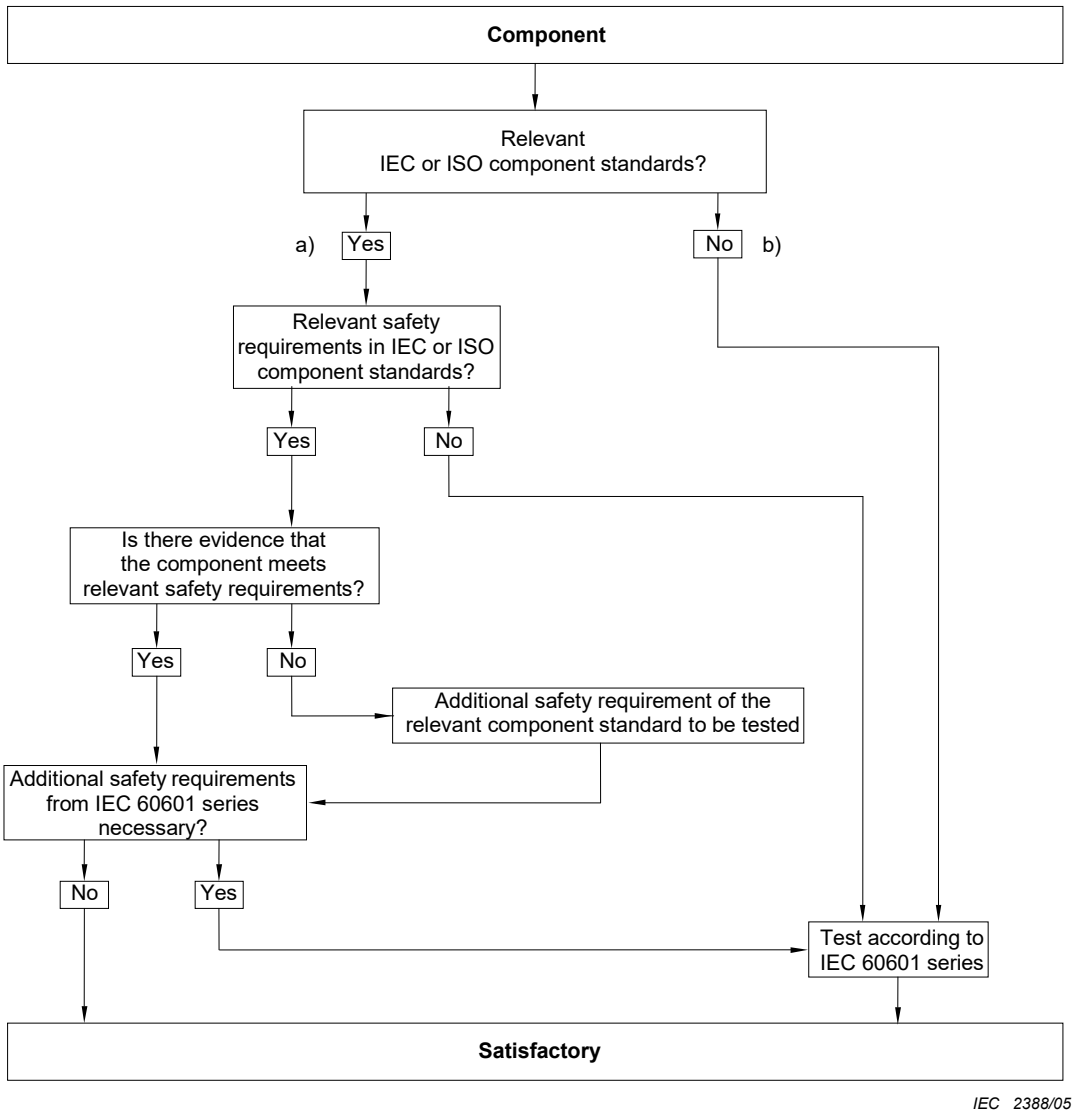

Figure 5 – Schematic flow chart for component qualification
(see 4.8)

4.10 * Power supply

4.10.1 Source of power for ME EQUIPMENT

ME EQUIPMENT shall be suitable for connection to a SUPPLY MAINS, be specified for connection to a separate power supply or be powered by an INTERNAL ELECTRICAL POWER SOURCE. Alternatively, a combination of these sources may be used.

Compliance is checked by inspection of the ACCOMPANYING DOCUMENTS.

4.10.2 SUPPLY MAINS for ME EQUIPMENT and ME SYSTEMS

For ME EQUIPMENT intended to be connected to SUPPLY MAINS, the following RATED voltages shall not be exceeded:

– 250 V for HAND-HELD ME EQUIPMENT;

– 250 V d.c. or single-phase a.c. or 500 V polyphase a.c. for ME EQUIPMENT and ME SYSTEMS with a RATED input ≤ 4 kVA; or

– 500 V for all other ME EQUIPMENT and ME SYSTEMS.

SUPPLY MAINS in this standard shall be assumed to have the following characteristics:

Copyright International Electrotechnical Commission
Provided by IHS Markit under license with IEC
No reproduction or networking permitted without license from IHS
Not for Resale, 08/26/2020 19:12:41 MDT

– overvoltage category II for mains transients unless a higher category is specified by the MANUFACTURER;

– no voltage in excess of 110 % or lower than 90 % of the NOMINAL voltage between any of the conductors of the system or between any of these conductors and earth (see 7.9.3.1);

NOTE 1 IEC 60601-1-2 contains requirements and tests for voltage dips, short interruptions and voltage variations on the SUPPLY MAINS. See also 1.3.

– voltages that are practically sinusoidal and forming a practically symmetrical supply system in case of polyphase supply;

– a frequency of ≤ 1 kHz;

– a frequency deviation of ≤ 1 Hz from the NOMINAL frequency up to 100 Hz and ≤ 1 % from the NOMINAL frequency from 100 Hz to 1 kHz;

– the protective measures as described in IEC 60364-4-41;

NOTE 2 If ME EQUIPMENT or an ME SYSTEM is intended to be operated from a SUPPLY MAINS with characteristics different from the SUPPLY MAINS described in this subclause, additional safety measures could be necessary.

– a d.c. voltage (as measured by a moving coil meter or equivalent method) having a peak-to-peak ripple not exceeding 10 % of the average value.

Where peak-to-peak ripple exceeds 10 % of the average value, the peak voltage has to be applied.

4.11 Power input

The steady-state measured input of the ME EQUIPMENT or ME SYSTEM at RATED voltage and at operating settings indicated in the instructions for use shall not exceed the marked rating by more than 10 % (see 7.2.7).

Compliance is checked by inspection and by the following tests.

– *The ME EQUIPMENT or ME SYSTEM is operated as specified in the instructions for use until the input has reached a stable value. Input is measured and compared with markings and the contents of the technical description.*

– *ME EQUIPMENT or an ME SYSTEM marked with one or more RATED voltage ranges is tested at both upper and lower limits of the range, unless each marking of RATED input is related to the mean value of the relevant voltage range, in which case the test is performed at a voltage equal to the mean value of that range.*

– *The steady state current is measured with a true r.m.s. reading instrument.*

Power input, if expressed in volt-amperes, is either measured with a volt-ampere meter or determined as the product of the steady state current (measured as described above) and the supply voltage.

NOTE 1 Technical details of a true r.m.s. meter can be found in IEC 62354 [66].

NOTE 2 Supplier information can be used to supplement the above measurement as a power input specification.

5 * General requirements for testing ME EQUIPMENT

5.1 * TYPE TESTS

The tests described in this standard are TYPE TESTS. The tests to be performed are determined taking into consideration the requirements of Clause 4, in particular 4.2.

A test need not be performed if analysis shows that the condition being tested has been adequately evaluated by other tests or methods.

The combination of simultaneous independent faults that could result in a HAZARDOUS SITUATION shall be documented in the RISK MANAGEMENT FILE (see also 4.7). When testing is necessary to demonstrate that BASIC SAFETY and ESSENTIAL PERFORMANCE are maintained

--`,,```,,,,````-`-`,,`,,`,`,,`---

Copyright International Electrotechnical Commission
Provided by IHS Markit under license with IEC
No reproduction or networking permitted without license from IHS Not for Resale, 08/26/2020 19:12:41 MDT

under such simultaneous independent faults, the related testing may be limited to worst case situations.

NOTE 1 The test results might necessitate a revision of the RISK ANALYSIS.

NOTE 2 When considering use of tests described in this standard as routine tests, see Annex K of IEC/TR 62354 (production line tests) or see IEC 62353 (recurrent tests).

5.2 * Number of samples

TYPE TESTS are performed on a representative sample of the item being tested.

NOTE Multiple samples can be utilized simultaneously if the validity of the results is not significantly affected.

5.3 Ambient temperature, humidity, atmospheric pressure

a) After the ME EQUIPMENT to be tested has been set up for NORMAL USE (according to 5.7), tests are performed within the range of environmental conditions indicated in the technical description (see 7.9.3.1).

b) ME EQUIPMENT is shielded from other influences (for example, draughts), that might affect the validity of the tests.

c) In cases where ambient temperatures cannot be maintained, the test conditions are to be consequently modified and results adjusted accordingly.

5.4 Other conditions

a) Unless otherwise specified in this standard, ME EQUIPMENT is to be tested under the least favourable working conditions. The working conditions are specified in the ACCOMPANYING DOCUMENTS. The least favourable working conditions shall be documented for every test where they apply.

b) ME EQUIPMENT having operating values that can be adjusted or controlled by anyone other than SERVICE PERSONNEL shall be adjusted as part of the tests to values least favourable for the relevant test, but in accordance with the instructions for use.

c) If the test results are influenced by the inlet pressure and flow or chemical composition of a cooling liquid, the test is performed within the limits for these characteristics as prescribed in the technical description.

d) Where cooling water is required, potable water is used.

5.5 Supply voltages, type of current, nature of supply, frequency

a) Where test results are influenced by deviations of the characteristics of the SUPPLY MAINS from their RATED values, the effect of such deviations is taken into account.

The values used during testing are according to 4.10.2 or according to that marked on the ME EQUIPMENT (see 7.2.6), whichever is least favourable.

NOTE 1 For the RATED value(s) given on the ME EQUIPMENT, deviations of the SUPPLY MAINS as provided in 4.10.2 are only to be tested if the deviations have a negative impact on BASIC SAFETY or ESSENTIAL PERFORMANCE.

b) ME EQUIPMENT having a MAINS PART intended for connection to a.c. SUPPLY MAINS is only tested with a.c. at RATED frequency ME EQUIPMENT marked with a RATED frequency range is tested at the least favourable frequency within that range.

c) ME EQUIPMENT designed for more than one RATED voltage, for both a.c. and d.c., or for both external power and an INTERNAL ELECTRICAL POWER SOURCE, is tested in conditions (described in 5.4) related to the least favourable voltage and nature of supply, for example,

Copyright International Electrotechnical Commission
Provided by IHS Markit under license with IEC
No reproduction or networking permitted without license from IHS Not for Resale, 08/26/2020 19:12:41 MDT

number of phases (except for single-phase supply) and type of current. It could be necessary to perform some tests more than once in order to establish which supply configuration is least favourable.

d) ME EQUIPMENT having a MAINS PART intended for connection to d.c. SUPPLY MAINS is only tested with d.c. When performing the tests, the possible influence of polarity on the operation of the ME EQUIPMENT is taken into consideration, according to the instructions for use. See also 8.2.2.

e) ME EQUIPMENT for which alternative ACCESSORIES or components specified in the ACCOMPANYING DOCUMENTS (see 7.9.2.14 and 7.9.3.2) are available is tested with those ACCESSORIES or components that give the least favourable conditions.

f) If the instructions for use specify that ME EQUIPMENT is intended to receive its power from a separate power supply, it is connected to such a power supply. See also 7.2.5 and 8.2.1.

NOTE 2 What was referred to in the first and second editions of this standard as a “specified power supply” is now considered either as another part of the same ME EQUIPMENT or as another equipment in an ME SYSTEM.

5.6 Repairs and modifications

In the event of the necessity for repairs or modifications after a failure or a probability of future failure during the sequence of tests, the testing laboratory and the supplier of the ME EQUIPMENT for the test can agree, either upon the presentation of a new sample on which all tests influencing the result are performed again or, preferably, upon making all the necessary repairs or modifications after which only relevant tests are repeated.

5.7 * Humidity preconditioning treatment

Prior to the tests of 8.7.4 and 8.8.3, all ME EQUIPMENT or its parts shall be subjected to a humidity preconditioning treatment.

ME EQUIPMENT or its parts shall be set up complete (or where necessary partially). Covers used during transport and storage are detached.

This treatment is applied only to those ME EQUIPMENT parts which are influenced by the climatic conditions that are simulated by the test.

Parts that can be detached without the use of a TOOL are detached but are treated simultaneously with the major part.

ACCESS COVERS that can be opened or detached without the use of a TOOL are opened and detached.

The humidity preconditioning treatment is performed in a humidity cabinet containing air with a relative humidity of 93 % ± 3 % where the ME EQUIPMENT or its parts under test are located. The humidity conditions at other locations in the chamber may vary by ± 6 %. The temperature of the air in the cabinet, at all places where ME EQUIPMENT or its parts can be located, shall be maintained within 2 °C of any convenient value T in the range of + 20 °C to +30 °C. Before being placed in the humidity cabinet, ME EQUIPMENT or its parts are be brought to a temperature between T and T + 4 °C, and kept at this temperature for at least 4 h before the humidity treatment starts.

KEEP ME EQUIPMENT and its parts, where the ENCLOSURE is classified as IPX0, in the humidity cabinet for 48 h.

Keep ME EQUIPMENT and its parts, where the ENCLOSURE is designed to provide higher ingress protection against liquids, in the humidity cabinet for 168 h.

After the treatment, the ME EQUIPMENT is reassembled, if necessary.

--`,,```,,,,````-`-`,,`,,`,`,,`---

Copyright International Electrotechnical Commission
Provided by IHS Markit under license with IEC
No reproduction or networking permitted without license from IHS Not for Resale, 08/26/2020 19:12:41 MDT

5.8 Sequence of tests

Unless stated otherwise, the tests in this standard are sequenced in such a way that the results of any test do not influence the results of a subsequent test.

NOTE It is recommended that all tests be performed in the sequence given in Annex B.

5.9 * Determination of APPLIED PARTS and ACCESSIBLE PARTS

5.9.1 APPLIED PARTS

APPLIED PARTS are identified by inspection and by reference to the ACCOMPANYING DOCUMENTS See also 4.6.

5.9.2 ACCESSIBLE PARTS

5.9.2.1 * Test finger

Parts of ME EQUIPMENT that are to be regarded as ACCESSIBLE PARTS are identified by inspection and where necessary by test. In case of doubt, accessibility is determined by a test with the standard test finger shown in Figure 6, applied in a bent or straight position:

– for all positions of ME EQUIPMENT when operated as in NORMAL USE,

– even after opening of ACCESS COVERS and removal of parts, including lamps, fuses and fuseholders, without the use of a TOOL or according to the instructions for use.

The standard test finger is applied without appreciable force in every possible position, except that ME EQUIPMENT intended to be used on the floor and having a mass in any operational condition exceeding 45 kg is not tilted. ME EQUIPMENT which, according to the technical description, is intended for mounting into a cabinet, is tested in its final mounting position.

Openings preventing the entry of the standard test finger of Figure 6 are mechanically tested by means of a straight unjointed test finger of the same dimensions, which is applied with a force of 30 N. If this finger enters, the test with the standard test finger of Figure 6 is repeated, the finger being pushed through the opening if necessary.

Copyright International Electrotechnical Commission
Provided by IHS Markit under license with IEC
No reproduction or networking permitted without license from IHS Not for Resale, 08/26/2020 19:12:41 MDT

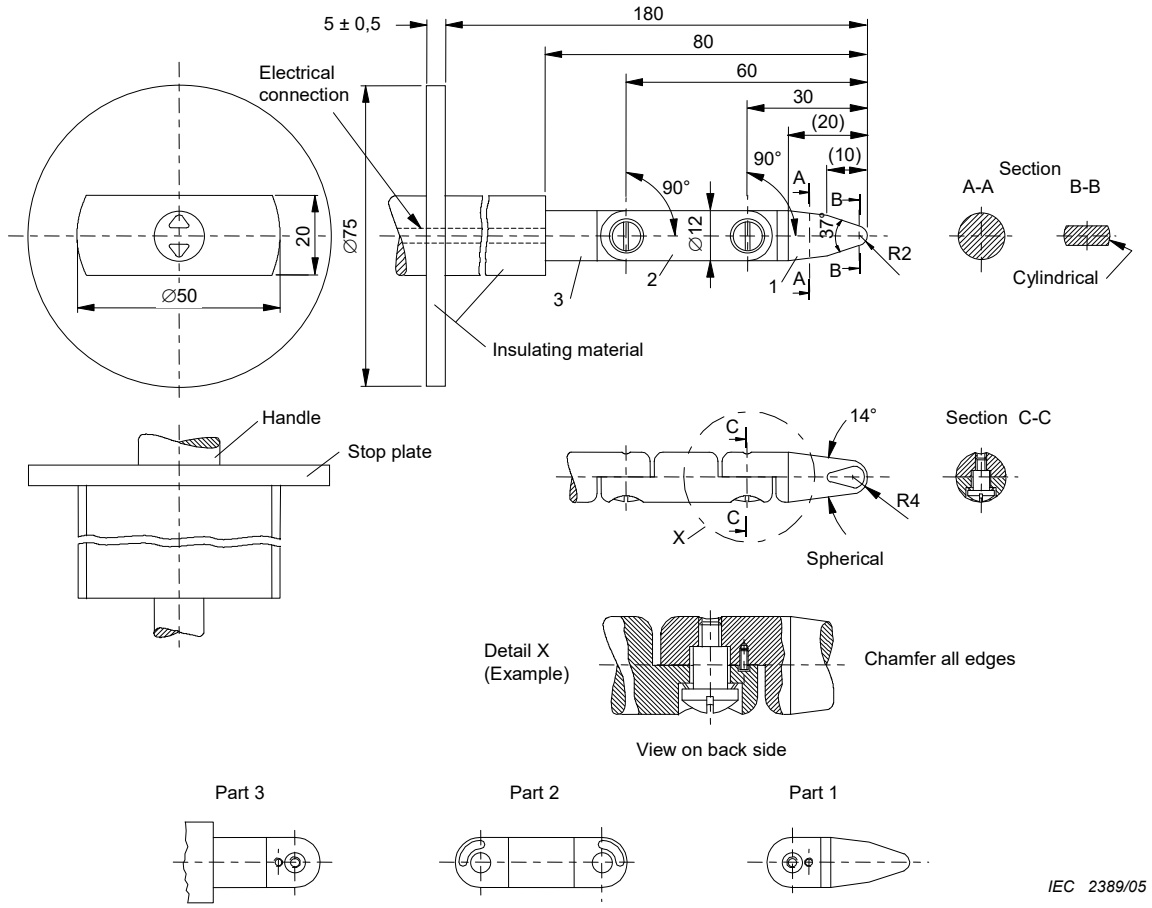

Linear dimensions in millimetres

Tolerances on dimensions without specific tolerances:

– 14° and 37° angles: ± 15′

– on radii: ± 0,1 mm

– on linear dimensions:

  ≤ 15 mm: $^{0}_{0,1}$ mm

  > 15 mm ≤ 25 mm: ± 0,1 mm

  > 25 mm: ± 0,3 mm

Material of finger: heat-treated steel, for example.

Both joints of this finger can be bent through an angle of 90 $^{+10°}_{0°}$ but in one and the same direction only.

NOTE 1 Using the pin and groove solution is only one of the possible approaches in order to limit the bending angle to 90°. For this reason, dimensions and tolerances of these details are not given in the drawing. The actual design must insure a 90° bending angle with a 0° to + 10° tolerance.

NOTE 2 Dimensions in parentheses are for information only.

NOTE 3 The test finger is taken from IEC 60950-1:2005, Figure 2A. That test finger is based on IEC 61032[7)], Figure 2, test probe B. In some cases, the tolerances are different.

Figure 6 – Standard test finger
(see 5.9.2.1)

7) IEC 61032:1997, *Protection of persons and equipment by enclosures - Probes for verification*

Copyright International Electrotechnical Commission
Provided by IHS Markit under license with IEC
No reproduction or networking permitted without license from IHS
Not for Resale, 08/26/2020 19:12:41 MDT

5.9.2.2 Test hook

ME EQUIPMENT openings are mechanically tested by means of the test hook (see Figure 7), if the hook can be inserted.

The test hook is inserted in all openings in question and is subsequently pulled with a force of 20 N for 10 s and in a direction substantially perpendicular to the surface in which the relevant opening is present. Any additional parts that have become accessible are identified by using the standard test finger of Figure 6 and by inspection.

Dimensions in millimetres

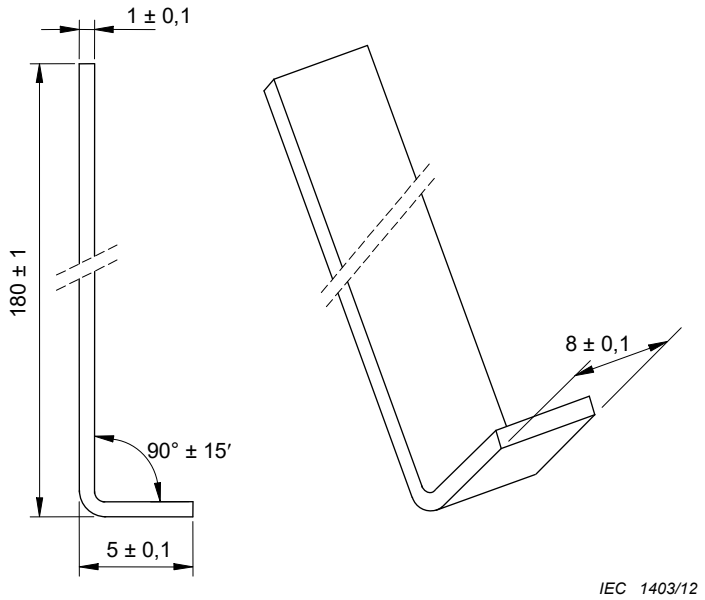

Material: steel

Figure 7 – Test hook
(see 5.9.2.2)

Copyright International Electrotechnical Commission
Provided by IHS Markit under license with IEC
No reproduction or networking permitted without license from IHS
Not for Resale, 08/26/2020 19:12:41 MDT

5.9.2.3 Actuating mechanisms

Conductive parts of actuating mechanisms of electrical controls that are accessible after the removal of handles, knobs, levers and the like are regarded as ACCESSIBLE PARTS. Conductive parts of actuating mechanisms are not considered ACCESSIBLE PARTS if removal of handles, knobs, etc. requires the use of a TOOL.

Compliance is checked by tests according to 5.9.2.1 and 15.4.6.1.

6 * Classification of ME EQUIPMENT and ME SYSTEMS

6.1 General

For purposes of this standard, ME EQUIPMENT, or parts thereof, including APPLIED PARTS, shall be classified as follows.

6.2 * Protection against electric shock

ME EQUIPMENT energized from an external electrical power source shall be classified as CLASS I ME EQUIPMENT or CLASS II ME EQUIPMENT (see 7.2.6). Other ME EQUIPMENT shall be classified as INTERNALLY POWERED ME EQUIPMENT.

INTERNALLY POWERED ME EQUIPMENT having a means of connection to a SUPPLY MAINS shall comply with the requirements for CLASS I ME EQUIPMENT or CLASS II ME EQUIPMENT while so connected, and with the requirements for INTERNALLY POWERED ME EQUIPMENT while not so connected.

APPLIED PARTS shall be classified as TYPE B APPLIED PARTS, TYPE BF APPLIED PARTS or TYPE CF APPLIED PARTS (see 7.2.10 and 8.3). APPLIED PARTS may be classified as DEFIBRILLATION-PROOF APPLIED PARTS (see 8.5.5).

6.3 Protection against harmful ingress of water or particulate matter

ENCLOSURES shall be classified according to the degree of protection against harmful ingress of water and particulate matter as detailed in IEC 60529 (see 7.2.9 and 11.6.5).

NOTE 1 This classification is IPN_1N_2, where:

– N_1 is an integer indicating degree of protection against particulate matter or the letter “X”.

– N_2 is an integer indicating the degree of protection against ingress of water or the letter “X”.

NOTE 2 See also Table D.3.

6.4 Method(s) of sterilization

ME EQUIPMENT or its parts intended to be sterilized shall be classified according to the method(s) of sterilization as indicated in the instructions for use (see 7.9.2.12 and 11.6.7).

EXAMPLE 1 By ethylene oxide gas

EXAMPLE 2 By irradiation such as gamma ray

EXAMPLE 3 By moist heat such as by autoclave

EXAMPLE 4 By other methods validated and described by the MANUFACTURER

6.5 Suitability for use in an OXYGEN RICH ENVIRONMENT

ME EQUIPMENT and ME SYSTEMS intended for use in an OXYGEN RICH ENVIRONMENT shall be classified for such use (see 11.2.2).

6.6 * Mode of operation

ME EQUIPMENT shall be classified for either CONTINUOUS OPERATION or non-CONTINUOUS OPERATION (see 7.2.11).

--`,,```,,,,````-`-`,,`,,`,`,,`---

Copyright International Electrotechnical Commission
Provided by IHS Markit under license with IEC
No reproduction or networking permitted without license from IHS Not for Resale, 08/26/2020 19:12:41 MDT

7 ME EQUIPMENT identification, marking and documents

NOTE Annex C contains a guide to assist the reader in locating the marking and labelling requirements for ME EQUIPMENT and ME SYSTEMS contained in other clauses of this standard.

7.1 General

7.1.1 * USABILITY of the identification, marking and documents

See 12.2.

7.1.2 * Legibility of markings

The markings required by 7.2, 7.3, 7.4, 7.5 and 7.6 shall be CLEARLY LEGIBLE under the following conditions:

– for warning statements, instructive statements, SAFETY SIGNS and drawings on the outside of ME EQUIPMENT: from the intended position of the person performing the related function;

– for FIXED ME EQUIPMENT: when the ME EQUIPMENT is mounted in its position of NORMAL USE;

– for TRANSPORTABLE ME EQUIPMENT and for STATIONARY ME EQUIPMENT that is not FIXED ME EQUIPMENT: in NORMAL USE or after dislodging the ME EQUIPMENT from a wall against which it has been positioned, or after turning the ME EQUIPMENT from its position of NORMAL USE and, in the case of dismountable rack units, after their removal from the rack;

– for markings on the inside of ME EQUIPMENT or ME EQUIPMENT parts: when viewed from the intended position of the person performing the related function.

Compliance for clear legibility is checked by the following test:

The ME EQUIPMENT or its part is positioned so that the viewpoint is the intended position of the OPERATOR. If the intended position of the OPERATOR is not specified and the position is not obvious, the viewpoint is at any point within the base of a cone subtended by an angle of 30° to the axis normal to the centre of the plane of the marking and at a distance of 1 m. The ambient illumination is the least favourable level in the range of 100 lx to 1 500 lx.

The observer has a visual acuity, corrected if necessary, of:

– *0 on the log Minimum Angle of Resolution (log MAR) scale or 6/6 (20/20); and*

– *is able to read N6 of the Jaeger test card*;

in normal room lighting conditions (approximately 500 lx).

The observer correctly reads the marking from the viewpoint.

7.1.3 * Durability of markings

The markings required by 7.2, 7.3, 7.4, 7.5 and 7.6 shall be removable only with a TOOL or by appreciable force and shall be sufficiently durable to remain CLEARLY LEGIBLE during the EXPECTED SERVICE LIFE of the ME EQUIPMENT. In considering the durability of the markings, the effect of NORMAL USE shall be taken into account.

Compliance is checked by inspection and the following tests:

a) *After all the tests of this standard have been performed (see the recommended sequence of tests in Annex B):*

   – *markings are tested to the requirements of 7.1.2; and*

   – *adhesive labels are not to have worked loose or become curled at the edges.*

b) *For markings required by 7.2, 7.4, 7.5 and 7.6, an additional test for durability is to be performed. Markings are rubbed by hand, without undue pressure, first for 15 s with a cloth rag soaked with distilled water, then for 15 s with a cloth rag soaked with ethanol 96 % and then for 15 s with a cloth rag soaked with isopropyl alcohol.*

Copyright International Electrotechnical Commission
Provided by IHS Markit under license with IEC
No reproduction or networking permitted without license from IHS Not for Resale, 08/26/2020 19:12:41 MDT

7.2 Marking on the outside of ME EQUIPMENT or ME EQUIPMENT parts (see also Table C.1)

7.2.1 Minimum requirements for marking on ME EQUIPMENT and on interchangeable parts

If the size of the ME EQUIPMENT, an ME EQUIPMENT part or an ACCESSORY, or the nature of its ENCLOSURE, does not allow affixation of all markings specified in 7.2.2 to 7.2.20 (inclusive), then at least the markings as indicated in 7.2.2, 7.2.5, 7.2.6 (not for PERMANENTLY INSTALLED ME EQUIPMENT), 7.2.10 and 7.2.13 (if applicable) shall be affixed and the remaining markings shall be recorded in full in the ACCOMPANYING DOCUMENTS. Where no marking of the ME EQUIPMENT is practicable, these markings may be affixed to the individual packaging.

Any material, component, ACCESSORY or ME EQUIPMENT that is intended for a single use or its packaging shall be marked "Single Use Only", “Do Not Reuse” or with symbol ISO 7000-1051 (2004-01) (see Table D.1, symbol 28).

NOTE See also 7.9.2.12.

7.2.2 * Identification

ME EQUIPMENT shall be marked with:

– the name or trademark and contact information of the MANUFACTURER;

– a MODEL OR TYPE REFERENCE;

– a serial number or lot or batch identifier; and

– the date of manufacture or use by date, if applicable.

NOTE See ISO 15223-1 for symbols for MANUFACTURER, serial number, lot or batch, year of manufacture and use by date.

The serial number, lot or batch identifier, and the date of manufacture may be provided in a human readable code or through automatic identification technology such as barcodes or RFID.

Detachable components of the ME EQUIPMENT shall be marked with:

– the name or trademark of the MANUFACTURER; and

– a MODEL OR TYPE REFERENCE;

unless misidentification does not result in an unacceptable RISK.

Software that forms part of a PEMS shall be identified with a unique identifier, such as revision level or date of release/issue. The identification shall be available to designated persons, e.g. SERVICE PERSONNEL. The identification need not be on the outside of the ME EQUIPMENT.

7.2.3 * Consult ACCOMPANYING DOCUMENTS

When the MANUFACTURER uses consulting the ACCOMPANYING DOCUMENTS as a primary RISK CONTROL measure for a specific RISK (e.g. the instructions for use contain information for safety) and the USABILITY ENGINEERING PROCESS determines that marking the ME EQUIPMENT is required for the effectiveness of the RISK CONTROL, the ME EQUIPMENT shall be marked with the refer to instruction manual/booklet mandatory action SAFETY SIGN ISO 7010-M002 (see Table D.2, SAFETY SIGN 10).

Otherwise, symbol ISO 7000-1641 (2004-01) (see Table D.1, symbol 11) may be used to advise the OPERATOR of the location of the instructions for use or to consult the ACCOMPANYING DOCUMENTS.

7.2.4 * ACCESSORIES

ACCESSORIES shall be marked with:

– the name or trade-mark and contact information of their MANUFACTURER

– a MODEL OR TYPE REFERENCE;

Copyright International Electrotechnical Commission
Provided by IHS Markit under license with IEC
No reproduction or networking permitted without license from IHS Not for Resale, 08/26/2020 19:12:41 MDT

– a serial number or lot or batch identifier; and

– the date of manufacture or use by date, if applicable.

NOTE See ISO 15223-1 for symbols for MANUFACTURER, serial number, lot or batch, year of manufacture and use by date.

The serial number, lot or batch identifier, and the date of manufacture may be provided in a human readable code or through automatic identification technology such as barcodes or RFID.

Where no marking of the ACCESSORIES is practicable, these markings may be affixed to the individual packaging.

7.2.5 ME EQUIPMENT intended to receive power from other equipment

If ME EQUIPMENT is intended to receive its power from other electrical equipment in an ME SYSTEM and compliance with the requirements of this standard is dependent on that other equipment, one of the following shall be provided:

– the name or trademark of the manufacturer of the other electrical equipment with a MODEL OR TYPE REFERENCE of the specified other equipment adjacent to the relevant connection point;

– placing SAFETY SIGN ISO 7010-M002 (see Table D.2, SAFETY SIGN 10) adjacent to the relevant connection point and listing of the required details in the instructions for use; or

– using a special connector style that is not commonly available on the market and listing of the required details in the instructions for use.

See also 7.9.2.3, 8.2.1 and 16.3.

7.2.6 Connection to the SUPPLY MAINS

ME EQUIPMENT shall be marked with the following information:

– the RATED supply voltage(s) or RATED voltage range(s) to which it may be connected. A RATED supply voltage range shall have a hyphen (-) between the minimum and maximum voltages. Where multiple RATED supply voltages or multiple RATED supply voltage ranges are given, they shall be separated by a solidus (/);

EXAMPLE 1 RATED supply voltage range: 100-240 V. This means that the ME EQUIPMENT is designed to be connected to a SUPPLY MAINS having a NOMINAL voltage between 100 V and 240 V.

EXAMPLE 2 Multiple RATED supply voltage: 120/220/240 V. This means that the ME EQUIPMENT is designed to be switched to allow connection to a SUPPLY MAINS having a NOMINAL voltage of 120 V or 220 V or 240 V.

NOTE 1 Marking of RATED supply voltage is taken from IEC 61293[8)].

– nature of supply, for example, number of phases (except for single-phase supply) and type of current. Symbols IEC 60417-5032, 5032-1, 5032-2, 5031, and 5033 (all 2002-10) may be used for this purpose (see Table D.1, symbols 1, 2, 3, 4 and 5);

NOTE 2 For alternating current, the RATED frequency in hertz is sufficient to identify the type of current.

– the RATED supply frequency or RATED frequency range in hertz;

EXAMPLE 3 RATED supply frequency range: 50-60 Hz. This means that the ME EQUIPMENT is designed to be connected to a SUPPLY MAINS having a NOMINAL frequency between 50 Hz and 60Hz.

– For CLASS II ME EQUIPMENT, symbol IEC 60417-5172 (2003-02) (see Table D.1, symbol 9).

Except for PERMANENTLY INSTALLED ME EQUIPMENT, these markings shall appear on the outside of the part that contains the SUPPLY MAINS connection and preferably adjacent to the connection point. For PERMANENTLY INSTALLED ME EQUIPMENT, the NOMINAL supply voltage or voltage range to which it can be connected may be marked on the inside or the outside of the ME EQUIPMENT, preferably adjacent to the SUPPLY MAINS connection.

8) IEC 61293:1994, *Marking of electrical equipment with ratings related to electrical supply - Safety requirements*

Copyright International Electrotechnical Commission
Provided by IHS Markit under license with IEC
No reproduction or networking permitted without license from IHS Not for Resale, 08/26/2020 19:12:41 MDT

7.2.7 Electrical input power from the SUPPLY MAINS

The RATED input from the SUPPLY MAINS shall be marked on the ME EQUIPMENT. The RATED input shall be given in:

– amperes or volt-amperes, or

– if the power factor exceeds 0,9, in amperes, volt-amperes or watts.

In the case of ME EQUIPMENT for one or several RATED voltage ranges, the RATED input shall always be given for the upper and lower limits of the range or ranges, if the range(s) is/are greater than ± 10 % of the mean value of the given range.

In the case of range limits which do not differ by more than 10 % from the mean value, marking of the input at the mean value of the range is sufficient.

If the rating of ME EQUIPMENT includes both long-time and momentary current or volt-ampere ratings, the marking shall include both long-time and the most relevant momentary volt-ampere ratings, each plainly identified and indicated in the ACCOMPANYING DOCUMENTS.

The marked input of ME EQUIPMENT provided with means for the connection of supply conductors of other electrical equipment shall include the RATED (and marked) output of such means.

7.2.8 Output connectors

7.2.8.1 Mains power output

For MULTIPLE SOCKET-OUTLETS that are integral with ME EQUIPMENT, see 16.9.2.1 b).

7.2.8.2 Other power sources

With the exception of MULTIPLE SOCKET-OUTLETS or connectors intended only for specified equipment, equipment parts or ACCESSORIES, output connectors of ME EQUIPMENT intended to deliver power shall be marked with the following information:

– RATED output voltage;

– RATED current or power (when applicable);

– output frequency (when applicable).

7.2.9 IP classification

ME EQUIPMENT or its parts shall be marked with a symbol, using the letters IP followed by the designations described in IEC 60529, according to the classification in 6.3 (see Table D.3, Code 2).

If the IP classification of the ENCLOSURE of the ME EQUIPMENT or its parts is not specified (i.e. IPXX) or is specified as IP00, IPX0 or IP0X, then the ME EQUIPMENT or its parts need not be marked as such.

7.2.10 * APPLIED PARTS

This requirement does not apply to parts that have been identified according to 4.6.

The degree of protection against electric shock as classified in 6.2 for all APPLIED PARTS shall be marked with the relevant symbol, i.e., TYPE B APPLIED PARTS with symbol IEC 60417-5840, TYPE BF APPLIED PARTS with symbol IEC 60417-5333 or TYPE CF APPLIED PARTS with symbol IEC 60417-5335 (all 2002-10) (see Table D.1, symbols 19, 20 and 21).

For DEFIBRILLATION-PROOF APPLIED PARTS, symbols IEC 60417-5841, IEC 60417-5334, or IEC 60417-5336 shall be used as applicable (all 2002-10) (see Table D.1, symbols 25, 26 and 27).

Copyright International Electrotechnical Commission
Provided by IHS Markit under license with IEC
No reproduction or networking permitted without license from IHS Not for Resale, 08/26/2020 19:12:41 MDT

The relevant symbol shall be marked adjacent to or on the connector for the APPLIED PART, unless either:

– there is no such connector, in which case the marking shall be on the APPLIED PART; or

– the connector is used for more than one APPLIED PART and the different APPLIED PARTS have different classifications, in which case each APPLIED PART shall be marked with the relevant symbol.

For clear differentiation with symbol IEC 60417-5333, symbol IEC 60417-5840 shall not be applied in such a way as to give the impression of being inscribed within a square (see Table D.1, symbols 19 and 20).

If the protection against the effect of the discharge of a cardiac defibrillator is partly in the PATIENT cable, SAFETY SIGN ISO 7010-W001, shall be placed near the relevant outlet (see Table D.2, SAFETY SIGN 2). The instructions for use shall explain that protection of the ME EQUIPMENT against the effects of the discharge of a cardiac defibrillator is dependent upon the use of appropriate cables.

7.2.11 Mode of operation

If no marking is provided, ME EQUIPMENT is assumed to be suitable for CONTINUOUS OPERATION. For ME EQUIPMENT intended for non-CONTINUOUS OPERATION, the DUTY CYCLE shall be indicated using an appropriate marking giving the maximum activation (on) time and the minimum deactivation (off) time.

7.2.12 * Fuses

Where the fuse-holder is an ACCESSIBLE PART, the type and full rating of the fuse (voltage, current, operating speed and breaking capacity) shall be marked adjacent to the fuse-holder.

7.2.13 Physiological effects (SAFETY SIGNS and warning statements)

ME EQUIPMENT producing physiological effects that are not obvious to the OPERATOR and can cause HARM to the PATIENT or OPERATOR shall bear a suitable SAFETY SIGN (see 7.5). The SAFETY SIGN shall appear in a prominent location so that it will be CLEARLY LEGIBLE in NORMAL USE after the ME EQUIPMENT has been PROPERLY INSTALLED.

The instructions for use shall describe the nature of the HAZARD and the precautions for avoiding it or minimising the associated RISK.

7.2.14 HIGH VOLTAGE TERMINAL DEVICES

HIGH VOLTAGE TERMINAL DEVICES on the outside of ME EQUIPMENT that are accessible without the use of a TOOL shall be marked with symbol IEC 60417-5036 (2002-10) (see Table D.1, symbol 24).

NOTE CREEPAGE DISTANCES and AIR CLEARANCES between the high voltage contacts and the standard test finger are subject to the requirements in 8.9.

7.2.15 Cooling conditions

Requirements for cooling provisions for ME EQUIPMENT (for example, supply of water or air) shall be marked.

7.2.16 Mechanical stability

For requirements on ME EQUIPMENT with a limited stability, see 9.4.

7.2.17 Protective packaging

If special handling measures have to be taken during transport or storage, the packaging shall be marked accordingly (see ISO 780).

The permissible environmental conditions for transport and storage shall be marked on the outside of the packaging (see 7.9.3.1 and ISO 15223-1).

Copyright International Electrotechnical Commission
Provided by IHS Markit under license with IEC
No reproduction or networking permitted without license from IHS Not for Resale, 08/26/2020 19:12:41 MDT

Where premature unpacking of ME EQUIPMENT or its parts could result in an unacceptable RISK, the packaging shall be marked with a suitable SAFETY SIGN (see 7.5).

EXAMPLE 1 Humidity sensitive ME EQUIPMENT.

EXAMPLE 2 ME EQUIPMENT containing hazardous substances and materials.

The packaging of ME EQUIPMENT or ACCESSORIES supplied sterile shall be marked as sterile and indicate the method of sterilization (see ISO 15223-1).

7.2.18 External pressure source

Adjacent to each input connector, the ME EQUIPMENT shall be marked with:

– the RATED maximum supply pressure from an external source, and

– the RATED flow rate if required to maintain BASIC SAFETY or ESSENTIAL PERFORMANCE.

7.2.19 FUNCTIONAL EARTH TERMINALS

A FUNCTIONAL EARTH TERMINAL shall be marked with symbol IEC 60417-5017 (2006-08) (see Table D.1, symbol 7).

7.2.20 Removable protective means

If ME EQUIPMENT has alternative applications that require the removal of a protective means to use a particular function, the protective means shall be marked to indicate the necessity for replacement when the relevant function is no longer needed. No marking is required when an interlock is provided.

Compliance with the requirements of 7.2 is checked by inspection and by application of the tests and criteria in 7.1.2 and 7.1.3.

7.2.21 * Mass of MOBILE ME EQUIPMENT

MOBILE ME EQUIPMENT shall be marked with its mass including its SAFE WORKING LOAD in kilograms. The marking shall be done in a way that it is obvious that it applies to the whole of the MOBILE ME EQUIPMENT when loaded with its SAFE WORKING LOAD and is separate and distinct from any markings related to maximum bin, shelf or drawer loading requirements.

7.3 Marking on the inside of ME EQUIPMENT or ME EQUIPMENT parts (see also Table C.2)

7.3.1 Heating elements or lampholders

The maximum power loading of heating elements or lampholders designed for use with heating lamps shall be marked near the heater or in the heater itself.

For heating elements or lampholders designed for use with heating lamps that can be changed only by SERVICE PERSONNEL with the use of a TOOL, an identifying marking referring to information stated in the ACCOMPANYING DOCUMENTS is sufficient.

7.3.2 * HIGH VOLTAGE parts

The presence of HIGH VOLTAGE parts shall be marked with symbol IEC 60417-5036 (2002-10) (see Table D.1, symbol 24) or with SAFETY SIGN 3 (see Table D.2, SAFETY SIGN 3). See also 7.5.

7.3.3 Batteries

The type of battery and the mode of insertion (if applicable) shall be marked (see 15.4.3.2).

For batteries intended to be changed only by SERVICE PERSONNEL with the use of a TOOL, an identifying marking referring to information stated in the ACCOMPANYING DOCUMENTS is sufficient.

Copyright International Electrotechnical Commission
Provided by IHS Markit under license with IEC
No reproduction or networking permitted without license from IHS Not for Resale, 08/26/2020 19:12:41 MDT

Where lithium batteries or fuel cells are incorporated and where incorrect replacement (e.g. reversed polarity) would result in a HAZARDOUS SITUATION (such as excessive temperatures, fire or explosion), a warning indicating that replacement by inadequately trained personnel could result in such a HAZARDOUS SITUATION shall be given in addition to the identifying marking referring to information stated in the ACCOMPANYING DOCUMENTS.

7.3.4 * Fuses, THERMAL CUT-OUTS and OVER-CURRENT RELEASES

Fuses and replaceable THERMAL CUT-OUTS and OVER-CURRENT RELEASES that are accessible only by the use of a TOOL shall be identified either by specification adjacent to the component (voltage, current, operating speed, size, breaking capacity), or by a reference to information in the ACCOMPANYING DOCUMENTS.

The nomenclature of IEC 60127-1 may be used.

7.3.5 * PROTECTIVE EARTH TERMINALS

PROTECTIVE EARTH TERMINALS shall be marked with symbol IEC 60417-5019 (2006-08) (see Table D.1, symbol 6) unless the PROTECTIVE EARTH TERMINAL is in an APPLIANCE INLET according to IEC 60320-1.

Markings that are on or adjacent to PROTECTIVE EARTH TERMINALS shall not be affixed to parts that have to be removed to make the connection. They shall remain visible after the connection has been made.

7.3.6 FUNCTIONAL EARTH TERMINALS

FUNCTIONAL EARTH TERMINALS shall be marked with symbol IEC 60417-5017 (2006-08) (see Table D.1, symbol 7).

7.3.7 Supply terminals

Terminals for supply conductors shall be marked adjacent to the terminals.

If ME EQUIPMENT is so small that the terminal markings cannot be affixed, they shall be included in the ACCOMPANYING DOCUMENTS.

Terminals that are provided exclusively for the connection of the neutral supply conductor in PERMANENTLY INSTALLED ME EQUIPMENT shall be marked with the appropriate code from IEC 60445 (see Table D.3, Code 1).

If marking for connection to a three-phase supply is necessary, it shall be according to IEC 60445.

Markings that are on or adjacent to electrical connection points shall not be affixed to parts that have to be removed to make the connection. They shall remain visible after the connection has been made.

7.3.8 Temperature of supply terminals

If any point within a terminal box or wiring compartment intended for connection of the power supply conductors for PERMANENTLY INSTALLED ME EQUIPMENT (including such conductors themselves), attains a temperature of more than 75 °C during NORMAL USE and NORMAL CONDITION at the maximum ambient operating temperature as indicated in the technical description (see 7.9.3.1), the ME EQUIPMENT shall be marked with the following or an equivalent statement:

"For supply connections, use wiring materials suitable for at least X °C."

where "X" is greater than the maximum temperature measured in the terminal box or wiring compartment in NORMAL USE and NORMAL CONDITION. This statement shall be located at or near the point where the supply connections are to be made. This statement shall not be affixed to parts that have to be removed to make the connection. It shall be CLEARLY LEGIBLE after the connections have been made.

Copyright International Electrotechnical Commission
Provided by IHS Markit under license with IEC
No reproduction or networking permitted without license from IHS Not for Resale, 08/26/2020 19:12:41 MDT

Compliance with the requirements of 7.3 is checked by inspection and by application of the tests and criteria in 7.1.2 and 7.1.3.

7.4 Marking of controls and instruments (see also Table C.3)

7.4.1 * Power switches

Switches used to control power to ME EQUIPMENT, including mains switches, shall have their "on" and "off" positions:

– marked with symbols IEC 60417-5007 (2002-10) and IEC 60417-5008 (2002-10) (see Table D.1, symbols 12 and 13); or

– indicated by an adjacent indicator light; or

– indicated by other unambiguous means.

Switches used to control power to parts of ME EQUIPMENT shall have their "on" and "off" positions:

– marked with symbols as specified above; or

– with IEC 60417-5264 (2002-10) and IEC 60417-5265 (2002-10) (see Table D.1, symbols 16 and 17); or

– indicated by an adjacent indicator light; or

– indicated by other unambiguous means.

A switch that brings the ME EQUIPMENT into the "stand-by" condition may be indicated by use of symbol IEC 60417-5009 (2015-03) (see Table D.1, Symbol 29).

If a push button with bistable positions is used:

– it shall be marked with symbol IEC 60417-5010 (2002-10) (see Table D.1, symbol 14); and

– the status shall be indicated by an adjacent indicator light; or

– the status shall be indicated by other unambiguous means.

If a push button with momentary on position is used:

– it shall be marked with symbol 60417-5011 (2002-10) (see Table D.1, symbol 15); or

– the status shall be indicated by an adjacent indicator light; or

– the status shall be indicated by other unambiguous means.

7.4.2 * Control devices

Different positions of control devices and different positions of switches on ME EQUIPMENT shall be indicated by figures, letters or other visual means,.

If in NORMAL USE, the change of setting of a control could result in an unacceptable RISK to the PATIENT, such controls shall be provided with either:

– an associated indicating device, e.g. instruments or scale, or

– an indication of the direction in which the magnitude of the function changes. See also 15.4.6.2.

7.4.3 Units of measurement

Numeric indications of parameters on ME EQUIPMENT shall be expressed in SI units according to ISO 80000-1 except the base quantities listed in Table 1 may be expressed in the indicated units, which are outside the SI units system.

For application of SI units, their multiples and certain other units, ISO 80000-1 applies.

Copyright International Electrotechnical Commission
Provided by IHS Markit under license with IEC
No reproduction or networking permitted without license from IHS Not for Resale, 08/26/2020 19:12:41 MDT

Compliance with the requirements of 7.4 is checked by inspection and by application of the tests and criteria in 7.1.2 and 7.1.3.

Table 1 – Units outside the SI units system that may be used on ME EQUIPMENT

Base quantity	Unit	
	Name	**Symbol**
Plane angle	revolution	r
	gon	gon or grade
	degree	°
	minute of angle	′
	second of angle	″
Time	minute	min
	hour	h
	day	d
Energy	electron volt	eV
Volume	litre	l [a]
Pressure of respiratory gases, blood, and other body fluids	millimetres of mercury	mmHg
	centimetres of water	cmH_2O
Pressure of gases	bar	bar
	millibar	mbar

[a] For consistency, in international standards only the symbol “l” is used for litre, although the symbol “L” is also given in ISO 80000-1.

Copyright International Electrotechnical Commission
Provided by IHS Markit under license with IEC
No reproduction or networking permitted without license from IHS Not for Resale, 08/26/2020 19:12:41 MDT

7.5 SAFETY SIGNS

For the purpose of this clause, markings used to convey a warning, prohibition or mandatory action that mitigates a RISK that is not obvious to the OPERATOR shall be a SAFETY SIGN selected from ISO 7010. If a SAFETY SIGN with an established meaning is appropriately used, the use of the general warning sign ISO 7010:2003-W001 (see Table D.2, SAFETY SIGN 2) is not required.

NOTE 1 In this context, warning is used to mean, “There is certain danger”; prohibition is used to mean, “You must not...”; and mandatory action is used to mean, “You must...”.

Where a SAFETY SIGN is not available to indicate a particular desired meaning, the meaning may be obtained by one of the following methods.

a) Constructing a SAFETY SIGN according to ISO 3864-1:2002, Clause 7 (for the corresponding templates, see Table D.2, SAFETY SIGNS 1, 4 and 8).

b) Using the general warning sign ISO 7010:2003-W001 (see Table D.2, SAFETY SIGN 2) placed together with a supplementary symbol or text. The text associated with the general warning sign shall be an affirmative statement (i.e., a safety notice) describing the principal RISK(S) foreseen (e.g. “Causes burns”, “Risk of explosion”, etc.).

c) Using the general prohibition sign ISO 7010:2003-P001 (see Table D.2, SAFETY SIGN 4) placed together with a supplementary symbol or text. The text associated with the general prohibition sign shall be a statement (i.e. a safety notice) describing what is prohibited (e.g. “Do not open”, “Do not drop”, etc.).

d) Using the general mandatory action sign ISO 7010:2003-M001 (see Table D.2, SAFETY SIGN 9) placed together with a supplementary symbol or text. The text associated with the general mandatory action sign shall be a command (i.e. a safety notice) describing required action (e.g. “Wear protective gloves”, “Scrub before entering”, etc.).

If there is insufficient space to place the affirmative statement together with the SAFETY SIGN on the ME EQUIPMENT, it may be placed in the instructions for use.

NOTE 2 The colours for SAFETY SIGNS are specified in ISO 3864-1 and it is important to use the specified colour.

NOTE 3 A safety notice should include the appropriate precautions or include instructions on how to reduce the RISK (e.g. “Do not use for . . . ”, “Keep away from . . .”, etc.).

SAFETY SIGNS, including any supplementary symbol or text, shall be explained in the instructions for use (see 7.9.2).

When supplementary text is placed together with SAFETY SIGNS, the supplementary text shall be in a language that is acceptable to the intended OPERATOR.

NOTE 4 In some countries, more than one language is required.

Compliance is checked by inspection.

7.6 Symbols

7.6.1 Explanation of symbols

The meanings of the symbols used for marking shall be explained in the instructions for use.

7.6.2 Symbols from Annex D

Symbols required by this standard shall conform to the requirements in the referenced IEC or ISO publication. Annex D provides the symbol graphic and description for these symbols as a quick reference.

Copyright International Electrotechnical Commission
Provided by IHS Markit under license with IEC
No reproduction or networking permitted without license from IHS Not for Resale, 08/26/2020 19:12:41 MDT

7.6.3 Symbols for controls and performance

Symbols used for controls and performance shall conform to the requirements of the IEC or ISO publication where the symbol is defined, when applicable. See also 7.2.13.

NOTE IEC 60878 [60] provides a survey of titles, descriptions and graphical representations of symbols for electrical equipment used in medical practice.

Compliance with the requirements of 7.6 is checked by inspection.

7.7 Colours of the insulation of conductors

7.7.1 PROTECTIVE EARTH CONDUCTOR

A PROTECTIVE EARTH CONDUCTOR shall be identified throughout its length by green and yellow coloured insulation.

7.7.2 PROTECTIVE EARTH CONNECTIONS

Any insulation on conductors inside ME EQUIPMENT that form PROTECTIVE EARTH CONNECTIONS shall be identified by the colours green and yellow at least at the termination of the conductors.

EXAMPLE Conductors of a multi-conductor cord that are connected in parallel, where the maximum allowed resistance of the PROTECTIVE EARTH CONNECTIONS would be exceeded if only the green and yellow coloured conductor were used.

7.7.3 Green and yellow insulation

Identification by green and yellow insulation shall only be used for:

– PROTECTIVE EARTH CONDUCTORS (see 8.6.2);

– conductors as specified in 7.7.2;

NOTE In other safety standards such as IEC 60950-1, internal connections between conductive parts and the main protective earth are called protective bonding conductors.

– POTENTIAL EQUALIZATION CONDUCTORS (see 8.6.7);

– FUNCTIONAL EARTH CONDUCTORS (see 8.6.9).

7.7.4 Neutral conductor

Conductors in POWER SUPPLY CORDS intended to be connected to the neutral conductor of the supply system shall be coloured “light blue” as specified in IEC 60227-1 or in IEC 60245-1.

7.7.5 POWER SUPPLY CORD conductors

Colours of conductors in POWER SUPPLY CORDS shall be in accordance with IEC 60227-1 or with IEC 60245-1.

Compliance with the requirements of 7.7 is checked by inspection.

7.8 * Indicator lights and controls

7.8.1 * Colours of indicator lights

The colours of indicator lights and their meanings shall comply with Table 2.

NOTE IEC 60601-1-8 contains specific requirement for the colour, flashing frequency and DUTY CYCLE of alarm indicator lights.

Dot-matrix and other alphanumeric displays are not considered to be indicator lights.

Copyright International Electrotechnical Commission
Provided by IHS Markit under license with IEC
No reproduction or networking permitted without license from IHS Not for Resale, 08/26/2020 19:12:41 MDT

Table 2 – Colours and meanings of indicator lights and alarm indicator lights for ME EQUIPMENT

Name	On when	Indicator light [a]	Alarm indicator light	Accompanied by sound	Operator requirement
Warning [b]	HAZARDOUS SITUATION is to be avoided	Red, not flashing	–	– [c]	Avoidance of a HAZARDOUS SITUATION which could cause death or serious injury
Caution [b]	HAZARDOUS SITUATION is to be avoided	Yellow, not flashing	–	–	Avoidance of a HAZARDOUS SITUATION which could cause minor or moderate injury or equipment damage
Ready for use	ME EQUIPMENT is ready for use	Green	–	–	–
HIGH PRIORITY ALARM CONDITION	Interruption of current workflow is needed	–	Red, flashing [d]	Typically [d]	Immediate action to prevent injury
MEDIUM PRIORITY ALARM CONDITION	Re-planning of current workflow is needed	–	Yellow, flashing [d]	Typically [d]	Prompt action to prevent injury
LOW PRIORITY ALARM CONDITION	Planning of future workflow is needed	–	Yellow or cyan, not flashing [d]	Optional [d]	Awareness for future action
Other	Situations other than that of red, yellow or green	Any colour other than red, yellow, cyan or green	–	–	–

[a] These indicator lights are INFORMATION SIGNALS and IEC 60601-1-8 requires that they be perceived as different than visual ALARM SIGNALS.

[b] Such warnings and cautions are frequently accompanied by a SAFETY SIGN.

[c] Sound may be utilized, but IEC 60601-1-8 requires that it be perceived as different than auditory ALARM SIGNALS.

[d] As specified in IEC 60601-1-8.

7.8.2 Colours of controls

The colour red shall be used only for a control by which a function is interrupted in case of emergency.

Compliance with the requirements of 7.8 is checked by inspection. See also 15.4.4.

7.9 ACCOMPANYING DOCUMENTS

7.9.1 * General (see also Table C.4)

ME EQUIPMENT shall be accompanied by documents containing at least the instructions for use and a technical description. The ACCOMPANYING DOCUMENTS shall be regarded as a part of the ME EQUIPMENT.

NOTE The purpose of the ACCOMPANYING DOCUMENTS is to promote the safe use of the ME EQUIPMENT during its EXPECTED SERVICE LIFE.

The ACCOMPANYING DOCUMENTS shall identify the ME EQUIPMENT by including, as applicable, the following:

– name or trade-name of the MANUFACTURER and contact information to which the RESPONSIBLE ORGANIZATION can refer;

– MODEL OR TYPE REFERENCE (see 7.2.2).

Copyright International Electrotechnical Commission
Provided by IHS Markit under license with IEC
No reproduction or networking permitted without license from IHS Not for Resale, 08/26/2020 19:12:41 MDT

ACCOMPANYING DOCUMENTS may be provided electronically, e.g. electronic file format on CD-ROM. If the ACCOMPANYING DOCUMENTS are provided electronically, the USABILITY ENGINEERING PROCESS shall include consideration of which information also needs to be provided as hard copy or as markings on the ME EQUIPMENT (see 12.2).

EXAMPLE Information to cover emergency operation

NOTE ACCOMPANYING DOCUMENTS provided electronically might not be acceptable in all jurisdictions.

The ACCOMPANYING DOCUMENTS shall specify any special skills, training and knowledge required of the intended OPERATOR or the RESPONSIBLE ORGANIZATION and any restrictions on locations or environments in which the ME EQUIPMENT can be used.

The ACCOMPANYING DOCUMENTS shall be written at a level consistent with the education, training and any special needs of the person(s) for whom they are intended.

Compliance is checked by inspection of the ACCOMPANYING DOCUMENTS, and, when provided electronically, as specified in IEC 60601-1-6.

7.9.2 Instructions for use (see also Table C.5)

7.9.2.1 * General

The instructions for use shall document:

– the use of the ME EQUIPMENT as intended by the MANUFACTURER,
– the frequently used functions;
– any known contraindication(s) to the use of the ME EQUIPMENT; and
– those parts of the ME EQUIPMENT that shall not be serviced or maintained while in use with a PATIENT.

Where the PATIENT is an intended OPERATOR, the instructions for use shall indicate:

– the PATIENT is an intended OPERATOR;
– a warning against servicing and maintenance while the ME EQUIPMENT is in use;
– which functions the PATIENT can safely use and, where applicable, which functions the PATIENT cannot safely use; and
– which maintenance the PATIENT can perform (e.g. changing batteries).

NOTE 1 For ME EQUIPMENT where the INTENDED USE includes the PATIENT partially or fully operating the ME EQUIPMENT, the PATIENT becomes an OPERATOR.

NOTE 2 For ME EQUIPMENT where the PATIENT is allowed to perform restricted maintenance, the PATIENT becomes SERVICE PERSONNEL.

The instructions for use shall indicate:

– the name or trademark and address of the MANUFACTURER;
– the MODEL OR TYPE REFERENCE.

The instructions for use shall include all applicable classifications specified in Clause 6, all markings specified in 7.2, and the explanation of SAFETY SIGNS and symbols (marked on the ME EQUIPMENT).

NOTE 3 The instructions for use are intended for the OPERATOR and the RESPONSIBLE ORGANIZATION and should contain only the information most likely to be useful to the OPERATOR or RESPONSIBLE ORGANIZATION. Additional details can be contained in the technical description. See also 7.9.3.

NOTE 4 Guidance on the preparation of instructions for use is found in IEC 62079 [25]. Guidance on the preparation of educational materials for ME EQUIPMENT is found in IEC/TR 61258 [24].

The instructions for use shall be in a language that is acceptable to the intended OPERATOR.

NOTE 5 In some countries, more than one language is required.

--`,,```,,,,````-`-`,,`,,`,`,,`---
Copyright International Electrotechnical Commission
Provided by IHS Markit under license with IEC
No reproduction or networking permitted without license from IHS
Not for Resale, 08/26/2020 19:12:41 MDT

7.9.2.2 * Warning and safety notices

The instructions for use shall include all warning and safety notices.

NOTE General warnings and safety notices should be placed in a specifically identified section of the instructions for use. A warning or safety notice that applies only to a specific instruction or action should precede the instruction to which it applies.

For CLASS I ME EQUIPMENT, the instructions for use shall include a warning statement to the effect: "WARNING: To avoid the risk of electric shock, this equipment must only be connected to a supply mains with protective earth."

The instructions for use shall provide the OPERATOR or RESPONSIBLE ORGANIZATION with warnings regarding any significant RISKS of reciprocal interference posed by the presence of the ME EQUIPMENT during specific investigations or treatments.

The instructions for use shall include information regarding potential electromagnetic or other interference between the ME EQUIPMENT and other devices together with advice on ways to avoid or minimize such interference.

If the ME EQUIPMENT is provided with an integral MULTIPLE SOCKET-OUTLET, the instructions for use shall provide a warning statement that connecting electrical equipment to the MSO effectively leads to creating an ME SYSTEM and the result can be a reduced level of safety. For the requirements that are applicable to an ME SYSTEM, the RESPONSIBLE ORGANIZATION shall be referred to this standard.

7.9.2.3 ME EQUIPMENT specified for connection to a separate power supply

If ME EQUIPMENT is intended for connection to a separate power supply, either the power supply shall be specified as part of the ME EQUIPMENT or the combination shall be specified as an ME SYSTEM. The instructions for use shall state this specification.

7.9.2.4 Electrical power source

For mains-operated ME EQUIPMENT with an additional power source not automatically maintained in a fully usable condition, the instructions for use shall include a warning statement referring to the necessity for periodic checking or replacement of such an additional power source.

If leakage from a battery would result in an unacceptable RISK, the instructions for use shall include a warning to remove the battery if the ME EQUIPMENT is not likely to be used for some time.

If an INTERNAL ELECTRICAL POWER SOURCE is replaceable, the instructions for use shall state its specification.

If loss of the power source would result in an unacceptable RISK, the instructions for use shall contain a warning that the ME EQUIPMENT must be connected to an appropriate power source.

EXAMPLE Internal or external battery, uninterruptible power supply (UPS) or institutional stand-by generator.

7.9.2.5 ME EQUIPMENT description

The instructions for use shall include:

– a brief description of the ME EQUIPMENT;

– how the ME EQUIPMENT functions; and

– the significant physical and performance characteristics of the ME EQUIPMENT.

If applicable, this description shall include the expected positions of the OPERATOR, PATIENT and other persons near the ME EQUIPMENT in NORMAL USE (see 9.2.2.3).

The instructions for use shall include information on the materials or ingredients to which the PATIENT or OPERATOR is exposed if such exposure can constitute an unacceptable RISK (see 11.7).

--`,,```,,,,````-`-`,,`,,`,`,,`---

Copyright International Electrotechnical Commission
Provided by IHS Markit under license with IEC
No reproduction or networking permitted without license from IHS Not for Resale, 08/26/2020 19:12:41 MDT

The instructions for use shall specify any restrictions on other equipment or NETWORK/DATA COUPLINGS, other than those forming part of an ME SYSTEM, to which a SIGNAL INPUT/OUTPUT PART may be connected.

The instructions for use shall indicate any APPLIED PART.

7.9.2.6 * Installation

If installation of the ME EQUIPMENT or its parts is required, the instructions for use shall contain:

– a reference to where the installation instructions are to be found (e.g. the technical description), or

– contact information for persons designated by the MANUFACTURER as qualified to perform the installation.

7.9.2.7 * Isolation from the SUPPLY MAINS

If an APPLIANCE COUPLER or MAINS PLUG or other separable plug is used as the isolation means to satisfy 8.11.1 a), the instructions for use shall contain an instruction not to position the ME EQUIPMENT so that it is difficult to operate the disconnection device.

7.9.2.8 Start-up PROCEDURE

The instructions for use shall contain the necessary information for the OPERATOR to bring the ME EQUIPMENT into operation including such items as any initial control settings, connection to or positioning of the PATIENT, etc.

The instructions for use shall detail any treatment or handling needed before the ME EQUIPMENT, its parts, or ACCESSORIES can be used.

EXAMPLE A pre-use checklist.

7.9.2.9 Operating instructions

The instructions for use shall contain all information necessary to operate the ME EQUIPMENT in accordance with its specification. This shall include explanation of the functions of controls, displays and signals, the sequence of operation, and connection and disconnection of detachable parts and ACCESSORIES, and replacement of material that is consumed during operation.

The meanings of figures, symbols, warning statements, abbreviations and indicator lights on ME EQUIPMENT shall be explained in the instructions for use.

7.9.2.10 Messages

The instructions for use shall list all system messages, error messages and fault messages that are generated, unless these messages are self-explanatory.

NOTE 1 These lists can be identified in groups.

The list shall include an explanation of messages including important causes, and possible action(s) by the OPERATOR, if any, that are necessary to resolve the situation indicated by the message.

NOTE 2 Requirements and guidelines for messages generated by an alarm system are found in IEC 60601-1-8.

7.9.2.11 Shutdown PROCEDURE

The instructions for use shall contain the necessary information for the OPERATOR to safely terminate the operation of the ME EQUIPMENT.

--`,,```,,,,````-`-`,,`,,`,`,,`---
Copyright International Electrotechnical Commission
Provided by IHS Markit under license with IEC
No reproduction or networking permitted without license from IHS Not for Resale, 08/26/2020 19:12:41 MDT

7.9.2.12 Cleaning, disinfection and sterilization

For ME EQUIPMENT parts or ACCESSORIES that can become contaminated through contact with the PATIENT or with body fluids or expired gases during NORMAL USE, the instructions for use shall contain:

– details about cleaning and disinfection or sterilization methods that may be used; and

– list the applicable parameters such as temperature, pressure, humidity, time limits and number of cycles that such ME EQUIPMENT parts or ACCESSORIES can tolerate.

See also 11.6.6 and 11.6.7.

This requirement does not apply to any material, component, ACCESSORY or ME EQUIPMENT that is marked as intended for a single use unless the MANUFACTURER specifies that the material, component, ACCESSORY or ME EQUIPMENT is to be cleaned, disinfected or sterilized before use (see 7.2.1).

7.9.2.13 Maintenance

The instructions for use shall instruct the OPERATOR or RESPONSIBLE ORGANIZATION in sufficient detail concerning preventive inspection, maintenance and calibration to be performed by them, including the frequency of such maintenance.

The instructions for use shall provide information for the safe performance of such routine maintenance necessary to ensure the continued safe use of the ME EQUIPMENT.

Additionally, the instructions for use shall identify the parts on which preventive inspection and maintenance shall be performed by SERVICE PERSONNEL, including the periods to be applied, but not necessarily including details about the actual performance of such maintenance.

For ME EQUIPMENT containing rechargeable batteries that are intended to be maintained by anyone other than SERVICE PERSONNEL, the instructions for use shall contain instructions to ensure adequate maintenance.

7.9.2.14 ACCESSORIES, supplementary equipment, used material

The instructions for use shall include a list of ACCESSORIES, detachable parts and materials that the MANUFACTURER has determined are intended for use with the ME EQUIPMENT.

If ME EQUIPMENT is intended to receive its power from other equipment in an ME SYSTEM, the instructions for use shall sufficiently specify such other equipment to ensure compliance with the requirements of this standard (e.g. part number, RATED voltage, maximum or minimum power, protection class, intermittent or continuous duty).

NOTE What was referred to in the first and second editions of this standard as a “specified power supply” is considered either as another part of the same ME EQUIPMENT or as other equipment in an ME SYSTEM. Similarly, a battery charger is considered either as part of the ME EQUIPMENT or as other equipment in an ME SYSTEM.

7.9.2.15 Environmental protection

The instructions for use shall provide advice on the proper disposal of waste products, residues, etc. and of the ME EQUIPMENT and ACCESSORIES at the end of their EXPECTED SERVICE LIFE.

7.9.2.16 Reference to the technical description

The instructions for use shall contain the information specified in 7.9.3 or a reference to where the material specified in 7.9.3 is to be found (e.g. in a service manual).

7.9.2.17 ME EQUIPMENT emitting radiation

For ME EQUIPMENT emitting radiation for medical purposes, when appropriate, the instructions for use shall indicate the nature, type, intensity and distribution of this radiation.

Copyright International Electrotechnical Commission
Provided by IHS Markit under license with IEC
No reproduction or networking permitted without license from IHS Not for Resale, 08/26/2020 19:12:41 MDT

7.9.2.18 ME EQUIPMENT and ACCESSORIES supplied sterile

The instructions for use for ME EQUIPMENT or ACCESSORIES supplied sterile shall indicate that they have been sterilized and indicate the method of sterilization.

The instructions for use shall indicate the necessary instructions in the event of damage to the sterile packaging, and where appropriate, details of the appropriate methods of re-sterilization (see also 7.9.2.12).

7.9.2.19 * Unique version identifier

The instructions for use shall contain a unique version identifier such as its date of issue.

EXAMPLE Month and year.

Compliance with the requirements of 7.9.2 is checked by inspection of the instructions for use in a language of an intended OPERATOR.

7.9.3 Technical description (see also Table C.6)

7.9.3.1 * General

The technical description shall provide all data that is essential for safe operation, transport and storage, and measures or conditions necessary for installing the ME EQUIPMENT, and preparing it for use. This shall include:

– the permissible environmental conditions of use including conditions for transport and storage. See also 7.2.17;

– all characteristics of the ME EQUIPMENT, including range(s), accuracy, and precision of the displayed values or an indication where they can be found;

– any special installation requirements such as the maximum permissible apparent impedance of SUPPLY MAINS;

NOTE 1 The apparent impedance of the SUPPLY MAINS is the sum of the impedance of the distribution network plus the impedance of the power source.

– if liquid is used for cooling, the permissible range of values of inlet pressure and flow, and the chemical composition of the cooling liquid;

– a description of the means of isolating the ME EQUIPMENT from the SUPPLY MAINS, if such means is not incorporated in the ME EQUIPMENT (see 8.11.1 b));

– if applicable, a description of the means for checking the oil level in partially sealed oil-filled ME EQUIPMENT or its parts (see 15.4.9);

– a warning statement that addresses the HAZARDS that can result from unauthorized modification of the ME EQUIPMENT, e.g. a statement to the effect:

- “WARNING: No modification of this equipment is allowed.”
- “WARNING: Do not modify this equipment without authorization of the manufacturer.”
- “WARNING: If this equipment is modified, appropriate inspection and testing must be conducted to ensure continued safe use of the equipment.”

– information pertaining to ESSENTIAL PERFORMANCE and any necessary recurrent ESSENTIAL PERFORMANCE and BASIC SAFETY testing including details of the means, methods and recommended frequency.

NOTE 2 This information is directly derived from the ESSENTIAL PERFORMANCE identified by the MANUFACTURER in 4.3.

If the technical description is separable from the instructions for use, it shall contain:

– all applicable classifications specified in Clause 6, any warning and safety notices and the explanation of SAFETY SIGNS (marked on the ME EQUIPMENT);

– a brief description of the ME EQUIPMENT, how the ME EQUIPMENT functions and its significant physical and performance characteristics; and

--`,,`,,`-`-`,,`,,`,`,,`---

Copyright International Electrotechnical Commission
Provided by IHS Markit under license with IEC
No reproduction or networking permitted without license from IHS Not for Resale, 08/26/2020 19:12:41 MDT

– a unique version identifier such as its date of issue.

NOTE 3 The technical description is intended for the RESPONSIBLE ORGANIZATION and SERVICE PERSONNEL.

The MANUFACTURER may designate the minimum qualifications for SERVICE PERSONNEL. If present, these requirements shall be documented in the technical description.

NOTE 4 Some authorities with jurisdiction impose additional requirements for qualification of SERVICE PERSONNEL.

7.9.3.2 Replacement of fuses, POWER SUPPLY CORDS and other parts

The technical description shall contain, as applicable, the following:

– the required type and full rating of fuses used in the SUPPLY MAINS external to PERMANENTLY INSTALLED ME EQUIPMENT, if the type and rating of these fuses are not apparent from the information concerning RATED current and mode of operation of ME EQUIPMENT;

– for ME EQUIPMENT having a non-DETACHABLE POWER SUPPLY CORD, a statement as to whether the POWER SUPPLY CORD is replaceable by SERVICE PERSONNEL, and if so, instructions for correct connection and anchoring to ensure that the requirements of 8.11.3 will continue to be met;

– instructions for correct replacement of interchangeable or detachable parts that the MANUFACTURER specifies as replaceable by SERVICE PERSONNEL; and

– where replacement of a component could result in an unacceptable RISK, appropriate warnings that identify the nature of the HAZARD and, if the MANUFACTURER specifies the component as replaceable by SERVICE PERSONNEL, all information necessary to safely replace the component.

7.9.3.3 Circuit diagrams, component part lists, etc.

The technical description shall contain a statement that the MANUFACTURER will make available on request circuit diagrams, component part lists, descriptions, calibration instructions, or other information that will assist SERVICE PERSONNEL to repair those parts of ME EQUIPMENT that are designated by the MANUFACTURER as repairable by SERVICE PERSONNEL.

7.9.3.4 * Mains isolation

The technical description shall clearly identify any means used to comply with the requirements of 8.11.1.

Compliance with the requirements of 7.9.3 is checked by inspection of the technical description.

8 * Protection against electrical HAZARDS from ME EQUIPMENT

8.1 Fundamental rule of protection against electric shock

The limits specified in 8.4 shall not be exceeded for ACCESSIBLE PARTS and APPLIED PARTS in NORMAL CONDITION or SINGLE FAULT CONDITION. For other HAZARDOUS SITUATIONS in SINGLE FAULT CONDITION, see 13.1.

a) * NORMAL CONDITION includes all of the following simultaneously:

– the presence on any SIGNAL INPUT/OUTPUT PART of any voltage or current from other electrical equipment that is permitted to be connected according to the ACCOMPANYING DOCUMENTS as specified in 7.9, or, if the ACCOMPANYING DOCUMENTS place no restrictions on such other electrical equipment, the presence of the MAXIMUM MAINS VOLTAGE as specified in 8.5.3;

– transposition of supply connections, for ME EQUIPMENT intended for connection to a SUPPLY MAINS by means of a MAINS PLUG;

– short circuit of any or all insulation that does not comply with the requirements of 8.8;

--`,,`,,`-`-`,,`,,`,`,,`---

Copyright International Electrotechnical Commission
Provided by IHS Markit under license with IEC
No reproduction or networking permitted without license from IHS Not for Resale, 08/26/2020 19:12:41 MDT

– short circuit of any or all CREEPAGE DISTANCES or AIR CLEARANCES that do not comply with the requirements of 8.9;

– open circuit of any or all earth connections that do not comply with the requirements of 8.6, including any functional earth connection.

b) * SINGLE FAULT CONDITION includes:

– short circuit of any one insulation that complies with the requirements for one MEANS OF PROTECTION as specified in 8.8;

NOTE This includes short circuiting of either constituent part of DOUBLE INSULATION that complies with 8.8.

– short circuit of any one CREEPAGE DISTANCE or AIR CLEARANCE that complies with the requirements for one MEANS OF PROTECTION as specified in 8.9;

– short circuit and open circuit of any component other than a COMPONENT WITH HIGH-INTEGRITY CHARACTERISTICS that is connected in parallel with insulation, with an AIR CLEARANCE or with a CREEPAGE DISTANCE unless shorting can be shown not to be a failure mode for the component (see also 4.8 and 4.9);

– open circuit of any one PROTECTIVE EARTH CONDUCTOR or internal PROTECTIVE EARTH CONNECTION that complies with the requirements of 8.6: this does not apply to a PROTECTIVE EARTH CONDUCTOR of PERMANENTLY INSTALLED ME EQUIPMENT, which is considered unlikely to become disconnected;

– interruption of any one supply conductor, except for the neutral conductor of polyphase ME EQUIPMENT or PERMANENTLY INSTALLED ME EQUIPMENT;

– interruption of any one power-carrying conductor between ME EQUIPMENT parts in separate ENCLOSURES, if this condition might cause permitted limits to be exceeded;

– unintended movement of a component (see 8.10.1);

– accidental detachment of conductors and connectors where breaking free could lead to a HAZARDOUS SITUATION. See also 8.10.2.

Determination of which parts are ACCESSIBLE PARTS is performed in accordance with 5.9.

LEAKAGE CURRENTS are measured in accordance with 8.7.

8.2 Requirements related to power sources

8.2.1 Connection to a separate power source

If ME EQUIPMENT is specified for connection to a separate power source, other than the SUPPLY MAINS, either the separate power source shall be considered as part of the ME EQUIPMENT and all relevant requirements of this standard shall apply, or the combination shall be considered as an ME SYSTEM. See also 7.2.5, 7.9.2.14, 5.5 f) and Clause 16.

NOTE What was formerly referred to, in the first and second editions of this standard, as a “specified power supply” is now considered either as another part of the same ME EQUIPMENT or as another electrical equipment in an ME SYSTEM.

Compliance is checked by inspection and by testing as specified in 5.5 f). If a particular separate power supply is specified then the relevant tests are performed with the ME EQUIPMENT connected to it. If a generic separate power supply is specified, then the specification in the ACCOMPANYING DOCUMENTS is inspected.

8.2.2 Connection to an external d.c. power source

If ME EQUIPMENT is specified for power supplied from an external d.c. power source, then a connection with the wrong polarity shall not lead to the HAZARDOUS SITUATIONS described in 13.1. The ME EQUIPMENT, when connection is subsequently made with the correct polarity, shall maintain BASIC SAFETY and ESSENTIAL PERFORMANCE.

Protective devices that can be reset by anyone without the use of a TOOL are acceptable provided the ME EQUIPMENT returns to NORMAL CONDITION on reset.

NOTE 1 See also 11.8.

Copyright International Electrotechnical Commission
Provided by IHS Markit under license with IEC
No reproduction or networking permitted without license from IHS Not for Resale, 08/26/2020 19:12:41 MDT

NOTE 2 The external d.c. power source can be a SUPPLY MAINS or another item of electrical equipment. In the latter case, the combination is considered to be an ME SYSTEM as specified in 8.2.1.

8.3 Classification of APPLIED PARTS

a) * An APPLIED PART that is specified in the ACCOMPANYING DOCUMENTS as suitable for DIRECT CARDIAC APPLICATION shall be a TYPE CF APPLIED PART.

NOTE See the rationale for the definition of DIRECT CARDIAC APPLICATION (3.22) concerning the APPLIED PARTS that need to be TYPE CF APPLIED PARTS. Other restrictions can apply for cardiac applications.

Compliance is checked by inspection.

b) * An APPLIED PART that includes a PATIENT CONNECTION that is intended to deliver electrical energy or an electrophysiological signal to or from the PATIENT shall be a TYPE BF APPLIED PART or TYPE CF APPLIED PART.

Compliance is checked by inspection.

c) An APPLIED PART not covered by a) or b) shall be a TYPE B APPLIED PART, TYPE BF APPLIED PART or TYPE CF APPLIED PART.

Compliance is checked by inspection.

8.4 Limitation of voltage, current or energy

8.4.1 * PATIENT CONNECTIONS intended to deliver current

The limits specified in 8.4.2 do not apply to currents that are intended to flow through the body of the PATIENT to produce a physiological effect during NORMAL USE.

8.4.2 ACCESSIBLE PARTS and APPLIED PARTS

a) The currents from, to or between PATIENT CONNECTIONS shall not exceed the limits for PATIENT LEAKAGE CURRENT and PATIENT AUXILIARY CURRENT specified in Table 3 and Table 4 when measured as specified in 8.7.4.

Compliance is checked by measurement according to 8.7.4.

b) * The LEAKAGE CURRENTS from, to or between ACCESSIBLE PARTS shall not exceed the limits for TOUCH CURRENT specified in 8.7.3 c) when measured as specified in 8.7.4.

Compliance is checked by measurement according to 8.7.4.

c) * The limits specified in b) above do not apply to the following parts if the probability of a connection to a PATIENT, either directly or through the body of the OPERATOR, through which a current exceeding the allowable TOUCH CURRENT could flow, is negligible in NORMAL USE, and the instructions for use instruct the OPERATOR not to touch the relevant part and the PATIENT simultaneously:

- accessible contacts of connectors;
- contacts of fuseholders that are accessible during replacement of the fuse;
- contacts of lampholders that are accessible after removal of the lamp;
- parts inside an ACCESS COVER that can be opened without the use of a TOOL, or where a TOOL is needed but the instructions for use instruct any OPERATOR other than SERVICE PERSONNEL to open the relevant ACCESS COVER.

EXAMPLE 1 Illuminated push-buttons

EXAMPLE 2 Indicator lamps

EXAMPLE 3 Recorder pens

Copyright International Electrotechnical Commission
Provided by IHS Markit under license with IEC
No reproduction or networking permitted without license from IHS Not for Resale, 08/26/2020 19:12:41 MDT

EXAMPLE 4 Parts of plug-in modules

EXAMPLE 5 Batteries

For such parts, the voltage to earth or to other ACCESSIBLE PARTS shall not exceed 42,4 V peak a.c. or 60 V d.c. in NORMAL CONDITION or in SINGLE FAULT CONDITION. The d.c. limit of 60 V applies to d.c. with not more than 10 % peak-to-peak ripple. If the ripple exceeds that amount, the 42,4 V peak limit applies. The energy shall not exceed 240 VA for longer than 60 s or the stored energy available shall not exceed 20 J at a potential of 2 V or more.

NOTE 1 If voltages higher than the limits specified in 8.4.2 c) are present, the LEAKAGE CURRENT limits referred to in 8.4.2 b) apply.

Compliance is checked by inspection of the instructions for use and by measurement.

If the ME EQUIPMENT has SIP/SOP connectors or separate power supply output connectors, measure the voltage of all conductive ACCESSIBLE PARTS of the SIP/SOP connectors or power output connectors to earth:

– *Connect a resistor of 10 kΩ ± 500 Ω (8 W for measurements up to 280 V r.m.s.) between the SIP/SOP-pin (or other output connector) to earth.*

– *Connect in parallel to the 10 kΩ resistor a peak voltmeter or an oscilloscope to measure the voltage.*

If the voltage measured above is less than or equal to 60 V d.c. or 42,4 V peak a.c., a subsequent LEAKAGE CURRENT test is not necessary.

NOTE 2 A similar approach exists in IEC 60950-1:2005, 1.4.9.

NOTE 3 10 kΩ has been selected, because it is a value higher than the body impedance of the OPERATOR (= 1 kΩ) and lower than the expected impedance of the insulation barrier (approximately 1 MΩ). Furthermore, IEC 60950-1:2005, 1.4.9 used a 5 kΩ resistor and therefore using a 10 kΩ resistor provides greater safety.

If the voltage measurement above exceeds the specified levels, then the TOUCH CURRENT from SIP/SOP connectors to earth and from any separate power supply output connectors to earth shall be measured.

Measure the TOUCH CURRENT derived from the SUPPLY MAINS by applying the limits in 8.7.3 c) from the connectors described above in:

– *NORMAL CONDITION including open FUNCTIONAL EARTH CONDUCTOR (if applicable); and*

– *SINGLE FAULT CONDITION (respectively open neutral conductor; open PROTECTIVE EARTH CONDUCTOR (if applicable)).*

NOTE 4 If the SIP/SOP circuit is completely isolated from the floating (non-earth referenced) SECONDARY CIRCUIT by an own insulation barrier of at least 1 MOOP based on MAINS VOLTAGE, i.e. a SEPARATION DEVICE according to 16.5, the measurement of the SIP/SOP connector to earth TOUCH CURRENT does not need to be conducted. In such cases it is sufficient to evaluate the effectiveness of the SEPARATION DEVICE by measurement according to 8.7.4.7 c).

NOTE 5 For CLASS I ME EQUIPMENT with earth referenced SECONDARY CIRCUITS in NORMAL CONDITION, the LEAKAGE CURRENT derived from the SUPPLY MAINS will be superimposed by the secondary voltage generated current. However, the SUPPLY MAINS derived LEAKAGE CURRENT will usually be equal to the TOUCH CURRENT measured on parts connected to the PROTECTIVE EARTH TERMINAL both in NORMAL CONDITION and in SINGLE FAULT CONDITION (open neutral conductor; open PROTECTIVE EARTH CONDUCTOR). If in doubt, the measurement can usually be done by setting the voltage meter to AC-measurement only or by using an oscilloscope or any other equivalent method to assure that the secondary voltage will not influence the measurement result.

d) * The voltage and energy limits specified in c) above also apply to:

– internal parts, other than contacts of plugs, connectors and socket-outlets, that can be touched by the test pin shown in Figure 8 inserted through an opening in an ENCLOSURE; and

– internal parts that can be touched by a metal test rod with a diameter of $4\ ^{0}_{-0,05}$ mm and a length of $100\ ^{+0,5}_{0}$ mm, inserted through any opening in the top of an ENCLOSURE or through any opening provided for the adjustment of pre-set controls that can be adjusted by the RESPONSIBLE ORGANIZATION in NORMAL USE by using a TOOL.

Copyright International Electrotechnical Commission
Provided by IHS Markit under license with IEC
No reproduction or networking permitted without license from IHS Not for Resale, 08/26/2020 19:12:41 MDT

See also 8.9.4 concerning the measurement of CREEPAGE DISTANCES and AIR CLEARANCES through slots or openings in external parts to the standard test finger.

Compliance is checked by inserting the test pin or the test rod through relevant openings. The test pin is inserted in every possible position with minimal force (not more than 1 N).

The test rod is inserted in every possible position through openings provided for the adjustment of pre-set controls that can be adjusted by the RESPONSIBLE ORGANIZATION in NORMAL USE, in case of doubt with a force of 10 N.

If the instructions for use specify that a particular TOOL is to be used, the test is repeated with that TOOL.

The test rod is also freely and vertically suspended through any opening in the top of an ENCLOSURE.

Dimensions in millimetres

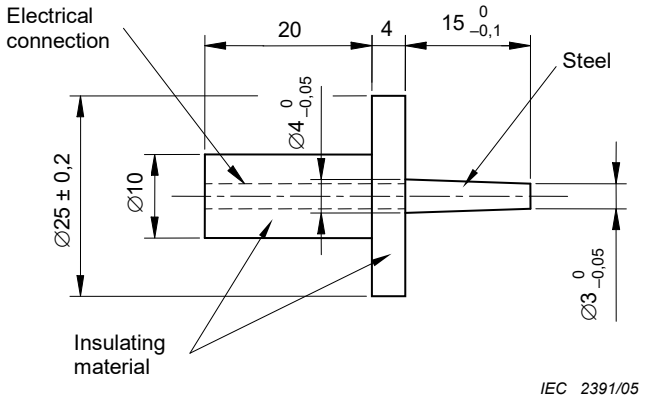

Figure 8 – Test pin
(see 8.4.2 d)

e) Where an ACCESS COVER that can be opened without the use of a TOOL gives access to parts that are at voltages above the levels permitted by this subclause, but these parts are automatically de-energized when the ACCESS COVER is opened, the device(s) used to de-energize the parts shall meet the requirements specified in 8.11.1 for mains isolating switches and shall remain effective in SINGLE FAULT CONDITION. If it is possible to prevent these devices from operating, a TOOL shall be required.

Compliance is checked by inspection.

8.4.3 * ME EQUIPMENT intended to be connected to a power source by a plug

ME EQUIPMENT or its parts intended to be connected to a power source by means of a plug shall be so designed that 1 s after disconnection of the plug the voltage between the pins of the plug and between either supply pin and the ENCLOSURE does not exceed 60 V or, if this value is exceeded, the stored charge does not exceed 45 μC.

Compliance is checked by the following test:

ME EQUIPMENT is operated at RATED voltage or at the upper limit of the RATED voltage range.

ME EQUIPMENT is disconnected from the power source with any relevant switch in the "On" and "Off" positions.

Either the ME EQUIPMENT is disconnected from the power source by means of the plug, in which case the test is performed as many times as necessary to allow the worst case to be

Copyright International Electrotechnical Commission
Provided by IHS Markit under license with IEC
No reproduction or networking permitted without license from IHS
Not for Resale, 08/26/2020 19:12:41 MDT

measured, or a triggering circuit is used to ensure that disconnection occurs at the peak of the supply voltage waveform.

The voltage between the pins of the plug and between any pin and the ENCLOSURE is measured 1 s after disconnection with an instrument the internal impedance of which does not affect the test significantly.

NOTE An example of a measuring arrangement that is considered acceptable is an oscilloscope and probe having an input impedance consisting of a resistance of 100 MΩ ± 5 MΩ in parallel with an input capacitance of 20 pF ± 5 pF.

The stored charge can be measured or calculated by any convenient method.

Where appropriate, a d.c. input voltage equal to the peak of the RATED SUPPLY MAINS voltage may be used.

8.4.4 * Internal capacitive circuits

Conductive parts of capacitive circuits that become accessible after ME EQUIPMENT has been de-energized and ACCESS COVERS as present in NORMAL USE have been removed immediately thereafter, shall not have a residual voltage exceeding 60 V, or, if this value is exceeded, shall not have a stored charge exceeding 45 μC.

If automatic discharging is not reasonably possible and ACCESS COVERS can be removed only with the aid of a TOOL, a device that is included and which permits manual discharging is acceptable. The capacitor(s) or the connected circuitry shall then be marked with symbol IEC 60417-5036 (2002-10) (see Table D.1, symbol 24) and the non-automatic discharging device shall be specified in the technical description.

Compliance is checked by the following test:

ME EQUIPMENT is operated at RATED voltage and then de-energized. Any ACCESS COVERS present in NORMAL USE are removed as quickly as normally possible. Immediately thereafter, the residual voltage on any accessible capacitors or circuit parts is measured and the stored charge calculated.

If a non-automatic discharging device is specified in the technical description, its inclusion and marking are ascertained by inspection.

8.5 Separation of parts

8.5.1 * MEANS OF PROTECTION (MOP)

8.5.1.1 General

ME EQUIPMENT shall have two MEANS OF PROTECTION to prevent APPLIED PARTS and other ACCESSIBLE PARTS from exceeding the limits specified in 8.4.

Each MEANS OF PROTECTION shall be categorized in relation to the ME EQUIPMENT part(s) which it protects from exceeding permitted limits. It is a MEANS OF PATIENT PROTECTION if it protects APPLIED PARTS or parts that are identified according to 4.6 as needing to be subject to the same requirements as APPLIED PARTS. Otherwise the requirements for either MOPP or MOOP shall be used as shown in Figure 40.

Varnishing, enamelling, oxidation and similar protective finishes, as well as covering with sealing compounds that can replasticize at temperatures to be expected during operation (including sterilization), shall not be regarded as a MEANS OF PROTECTION.

NOTE Coatings and other insulation that are intended as a MEANS OF PROTECTION and that comply with IEC 60950-1:2005 or IEC 62368-1:2018 can be used as a MEANS OF OPERATOR PROTECTION but not automatically as a MEANS OF PATIENT PROTECTION. For MEANS OF PATIENT PROTECTION, considerations can arise as a result of the RISK MANAGEMENT PROCESS.

Components and wiring forming a MEANS OF PROTECTION shall comply with the relevant requirements of 8.10.

Copyright International Electrotechnical Commission
Provided by IHS Markit under license with IEC
No reproduction or networking permitted without license from IHS Not for Resale, 08/26/2020 19:12:41 MDT

Any insulation, CREEPAGE DISTANCE, AIR CLEARANCES, component or earth connection that does not comply with the requirements of 8.5.1.2 and 8.5.1.3 shall not be considered as a MEANS OF PROTECTION. Failure of any or all such parts shall be regarded as NORMAL CONDITION.

Compliance is checked by the test in 8.5.1.3.

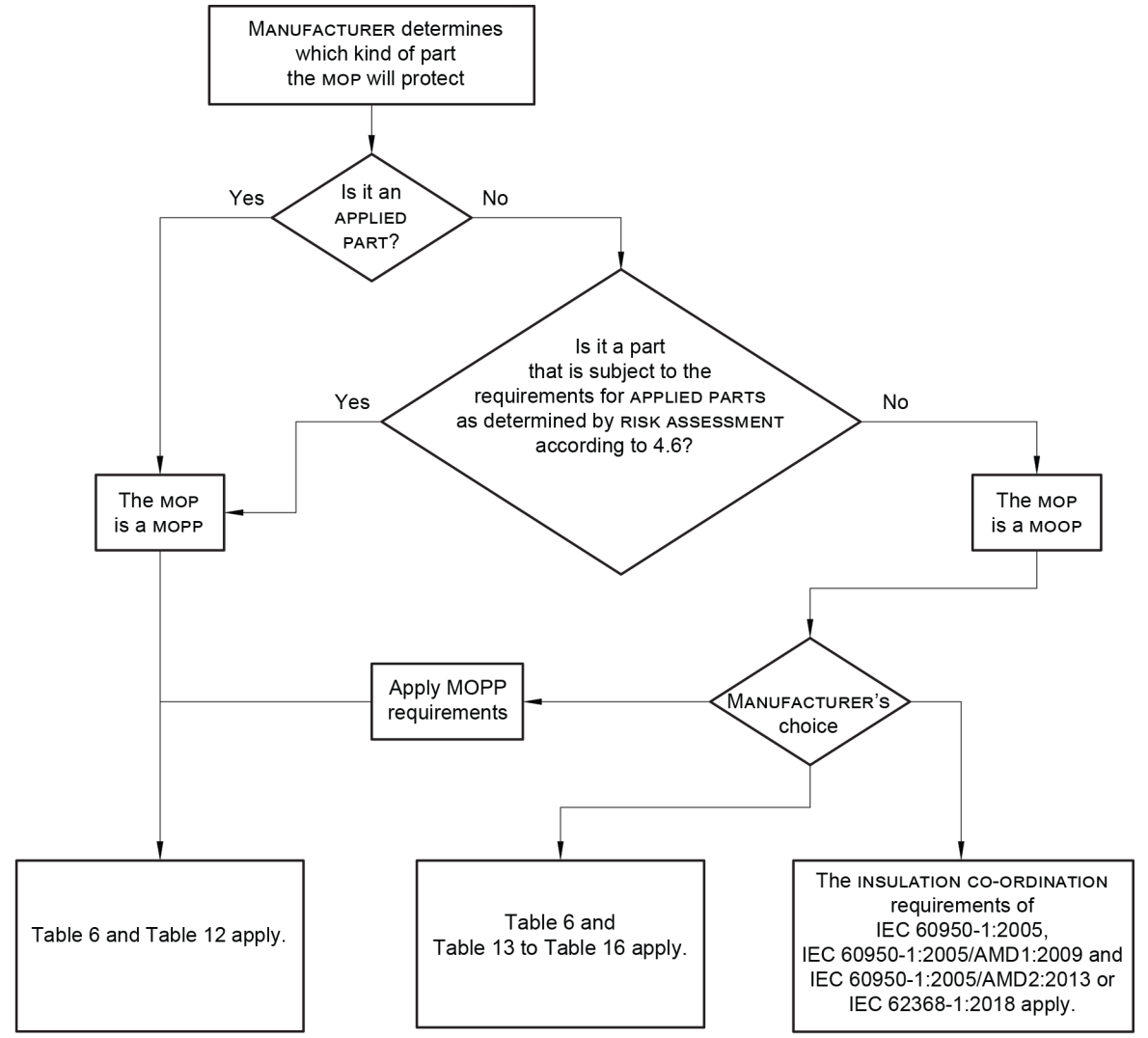

Figure 40 – Identification of MEANS OF PATIENT PROTECTION and MEANS OF OPERATOR PROTECTION

8.5.1.2 * MEANS OF PATIENT PROTECTION (MOPP)

Solid insulation forming a MEANS OF PATIENT PROTECTION shall comply with the dielectric strength test according to 8.8 at the test voltage specified in Table 6.

CREEPAGE DISTANCES and AIR CLEARANCES forming a MEANS OF PATIENT PROTECTION shall comply with the limits specified in Table 12.

NOTE 1 Barriers providing 2 MOOP with AIR CLEARANCE values according to Table 13 to Table 15 (inclusive) or according to IEC 60950-1:2005, IEC 60950-1:2005/AMD1:2009 and IEC 60950-1:2005/AMD2:2013 meet the requirements for 1 MOPP according to Table 12 for WORKING VOLTAGES up to 707 V d.c. / 500 V r.m.s. At higher WORKING VOLTAGES, 2 MOOP does not necessarily provide 1 MOPP.

Copyright International Electrotechnical Commission
Provided by IHS Markit under license with IEC
No reproduction or networking permitted without license from IHS
Not for Resale, 08/26/2020 19:12:41 MDT

Barriers providing REINFORCED INSULATION (2 MOOP) with AIR CLEARANCE values according to IEC 62368-1:2018 for WORKING VOLTAGES up to and including 354 V d.c. / 250 V r.m.s. meets the requirements for 1 MOPP according to Table 12. At higher WORKING VOLTAGES, REINFORCED INSULATION (2 MOOP) does not necessarily provide 1 MOPP.

See also 8.5.1.3.

NOTE 2 Barriers providing REINFORCED INSULATION (2 MOOP) with CREEPAGE DISTANCES according to IEC 62368-1:2018, Table 17 and Table 18 or IEC 60950-1:2005, IEC 60950-1:2005/AMD1:2009, IEC 60950-1:2005/AMD2:2013, Table 2N meet the requirements for 1 MOPP according to Table 12.

PROTECTIVE EARTH CONNECTIONS forming a MEANS OF PATIENT PROTECTION shall comply with the requirements and tests of 8.6.

A Y capacitor (Y1 or Y2 only) complying with IEC 60384-14 is considered equivalent to one MEANS OF PATIENT PROTECTION. Where two capacitors are used in series, they shall be identical in type (either both Y1 or both Y2) and shall have the same NOMINAL capacitance. The capacitor(s) shall meet the dielectric strength for the type of protection for which they are being used (i.e. one or two MEANS OF PATIENT PROTECTION).

Where the working voltage across a barrier forming a MEANS OF PATIENT PROTECTION is less than 42,4 V peak a.c. or 60 V d.c., a single Y1 capacitor is acceptable for two MEANS OF PATIENT PROTECTION.

NOTE 3 When fitting Y capacitors across barriers, the dielectric strength requirement is to be considered. For example, for voltages in the range of 212 V peak to 354 V peak, two MEANS OF PATIENT PROTECTION are tested at 4 000 V a.c.; therefore, Y1 capacitors are used. Two Y2 capacitors in series would not withstand this voltage as they are rated at 1 500 V a.c. each. For voltages below 212 V peak, two Y2 capacitors would suffice as the dielectric strength requirement is 3 000 V a.c.

Opto-couplers complying with IEC 60747-5-5:2007, or a later edition, are considered equivalent to the requirements of 8.8.2 and 8.9.3.

All of the following apply:

– AIR CLEARANCE at the outside of the opto-coupler;

– CREEPAGE DISTANCE at the outside of the opto-coupler; and

– dielectric strength across the opto-coupler.

NOTE 4 The factor of 1,6 on insulation test voltage is only used for thermal cycling tests (8.9.3), as also in other safety standards (e.g. IEC 62368-1, IEC 60950-1). IEC 60747-5-5 applies different test methods. Because compliance with IEC 60747-5-5 is regarded as equivalent to the thermal cycling test, the 1,6 factor is not required. This is the same approach used in IEC 62368-1:2018, 5.4.4.4.

NOTE 5 Distance through insulation (0,4 mm) and thermal cycling testing are not required because compliance with the component standards addresses the RISK of pin holes and thermal effects on the insulating compound.

Compliance is checked by the test in 8.5.1.3.

8.5.1.3 MEANS OF OPERATOR PROTECTION (MOOP)

Solid insulation forming a MEANS OF OPERATOR PROTECTION shall:

– comply with the dielectric strength test according to 8.8 at the test voltage specified in Table 6; or

– comply with the requirements of IEC 60950-1:2005, IEC 60950-1:2005/AMD1:2009 and IEC 60950-1:2005/AMD2:2013 for INSULATION CO-ORDINATION; or

– comply with the requirements of IEC 62368-1:2018 for INSULATION CO-ORDINATION.

CREEPAGE DISTANCES and AIR CLEARANCES forming a MEANS OF OPERATOR PROTECTION shall:

– comply with the limits specified in Table 13 to Table 16 (inclusive); or

– comply with the requirements of IEC 60950-1:2005, IEC 60950-1:2005/AMD1:2009 and IEC 60950-1:2005/AMD2:2013 for INSULATION CO-ORDINATION; or

– comply with the requirements of IEC 62368-1:2018 for INSULATION CO-ORDINATION.

PROTECTIVE EARTH CONNECTIONS forming a MEANS OF OPERATOR PROTECTION shall either:

– comply with the requirements of 8.6; or

--`,,```,,,,````-`-`,,`,,`,`,,`---

Copyright International Electrotechnical Commission
Provided by IHS Markit under license with IEC
No reproduction or networking permitted without license from IHS Not for Resale, 08/26/2020 19:12:41 MDT

– comply with the requirements and tests of IEC 60950-1:2005, IEC 60950-1:2005/AMD1:2009 and IEC 60950-1:2005/AMD2:2013 for protective earthing; or

– comply with the requirements of IEC 62368-1:2018 for protective earthing.

A Y capacitor (Y1 or Y2 only) complying with IEC 60384-14 is considered equivalent to one MEANS OF OPERATOR PROTECTION. Where two capacitors are used in series, they shall be identical in type (either both Y1 or both Y2) and shall have the same NOMINAL capacitance. The capacitor(s) shall meet the dielectric strength for the type of protection for which they are being used (i.e. one or two MEANS OF OPERATOR PROTECTION). A Y1 capacitor can be used for two MEANS OF OPERATOR PROTECTION.

Opto-couplers complying with IEC 60747-5-5:2007, or a later edition, are considered equivalent to the requirements of 8.8.2 for distances through solid insulation and 8.9.3 for spaces filled by insulating compound.

The following apply:

– AIR CLEARANCE at the outside of the opto-coupler;

– CREEPAGE DISTANCE at the outside of the opto-coupler; and

– dielectric strength across the opto-coupler.

NOTE 1 The factor of 1,6 on insulation test voltage is only used for thermal cycling tests (8.9.3), as also in other safety standards (e.g. IEC 62368-1, IEC 60950-1). IEC 60747-5-5 applies different test methods. Because compliance with IEC 60747-5-5 is regarded as equivalent to the thermal cycling test, the 1,6 factor is not required. This is the same approach used in IEC 62368-1:2018, 5.4.4.4.

NOTE 2 Distance through insulation (0,4 mm) and thermal cycling testing are not required because compliance with the component standards addresses the RISK of pin holes and thermal effects on the insulating compound.

Compliance is checked by examination of the physical and electrical configuration of the ME EQUIPMENT to identify points at which insulation, CREEPAGE DISTANCES, AIR CLEARANCES, impedances of components or PROTECTIVE EARTH CONNECTIONS prevent ACCESSIBLE PARTS or APPLIED PARTS from exceeding the limits specified in 8.4.

NOTE 3 Such points typically include insulation between parts different from earth potential and ACCESSIBLE PARTS or APPLIED PARTS but can also include, for example, insulation between a floating circuit and earth or other circuits. A survey of insulation paths is found in Annex J.

For each such point, it is determined whether:

– *solid insulation complies with the dielectric strength test according to 8.8 or, for a MEANS OF OPERATOR PROTECTION, with the requirements of IEC 60950-1:2005, IEC 60950-1:2005/AMD1:2009 and IEC 60950-1:2005/AMD2:2013 or IEC 62368-1:2018 for INSULATION CO-ORDINATION;*

– *CREEPAGE DISTANCES and AIR CLEARANCES are as specified in 8.9 or, for a MEANS OF OPERATOR PROTECTION, with the requirements of IEC 60950-1:2005, IEC 60950-1:2005/AMD1:2009 and IEC 60950-1:2005/AMD2:2013 or IEC 62368-1:2018 for INSULATION CO-ORDINATION*;

– *components that are connected in parallel with an insulation, with an AIR CLEARANCE or with a CREEPAGE DISTANCE comply with 4.8 and 8.10.1;*

– *PROTECTIVE EARTH CONNECTIONS comply with the requirements of 8.6 or, for a MEANS OF OPERATOR PROTECTION, with the requirements of IEC 60950-1:2005, IEC 60950-1:2005/AMD1:2009 and IEC 60950-1:2005/AMD2:2013 or IEC 62368-1:2018 for protective earthing;*

and hence whether a failure at that point is to be regarded as a NORMAL CONDITION or as a SINGLE FAULT CONDITION.

The WORKING VOLTAGE is determined by inspection, calculation or measurement, according to 8.5.4.

--`,,```,,,,````-`-`,,`,,`,`,,`---
Copyright International Electrotechnical Commission
Provided by IHS Markit under license with IEC
No reproduction or networking permitted without license from IHS Not for Resale, 08/26/2020 19:12:41 MDT

The voltage, current or energy that can appear between any ACCESSIBLE PART or APPLIED PART and any other ACCESSIBLE PART, APPLIED PART or earth in NORMAL CONDITION and in SINGLE FAULT CONDITION is determined by inspection or calculation or, where necessary, by measurement in the relevant conditions.

8.5.2 Separation of PATIENT CONNECTIONS

8.5.2.1 * F-TYPE APPLIED PARTS

The PATIENT CONNECTION(S) of any F-TYPE APPLIED PART shall be separated from all other parts, including the PATIENT CONNECTION(S) of other APPLIED PARTS, by means equivalent to one MEANS OF PATIENT PROTECTION for a WORKING VOLTAGE equal to the MAXIMUM MAINS VOLTAGE and shall comply with the specified limit for PATIENT LEAKAGE CURRENT with 110 % of the MAXIMUM MAINS VOLTAGE applied.

A single F-TYPE APPLIED PART may include multiple functions, in which case separation between such functions is not required.

If there is no electrical separation between PATIENT CONNECTION(S) of the same or another function (e.g. between ECG electrode and pressure catheter), then these PATIENT CONNECTION(S) are treated as one APPLIED PART.

Whether multiple functions are to be considered as all within one APPLIED PART or as multiple APPLIED PARTS is as defined by the MANUFACTURER.

The classification as TYPE BF, TYPE CF or DEFIBRILLATION-PROOF applies to the whole of one APPLIED PART.

Compliance is checked by inspection, by the LEAKAGE CURRENT tests of 8.7.4, by the dielectric strength test of 8.8.3 and by measurement of relevant CREEPAGE DISTANCES and AIR CLEARANCES.

NOTE The separation means between an F-TYPE APPLIED PART and other parts are subject both to these tests, related to the MAXIMUM MAINS VOLTAGE, and to tests related to the voltages present within the respective circuits as specified in 8.5.4. Depending on the magnitude of the latter voltages, one set of tests or the other could be more stringent.

Any protective device connected between PATIENT CONNECTIONS of an F-TYPE APPLIED PART and the ENCLOSURE for the purpose of providing protection against excessive voltages shall not operate below 500 V r.m.s.

Compliance is checked by testing the operating voltage of the protective device.

8.5.2.2 * TYPE B APPLIED PARTS

The PATIENT CONNECTION(S) of a TYPE B APPLIED PART that is not PROTECTIVELY EARTHED shall be separated by one MEANS OF PATIENT PROTECTION from metal ACCESSIBLE PARTS that are not PROTECTIVELY EARTHED, unless:

– the metal ACCESSIBLE PART is physically contiguous with the APPLIED PART and can be regarded as a part of the APPLIED PART; and

– the RISK that the metal ACCESSIBLE PART will make contact with a source of voltage or LEAKAGE CURRENT above permitted limits is acceptably low. In this case, the test in 8.7.4.7 d) does not apply.

Compliance is checked by inspection, by the LEAKAGE CURRENT tests of 8.7.4, by the dielectric strength test of 8.8.3, by measurement of relevant CREEPAGE DISTANCES and AIR CLEARANCES, and by reference to the RISK MANAGEMENT FILE.

8.5.2.3 * PATIENT leads or PATIENT cables

Any connector for electrical connections on a PATIENT lead that:

– is at the end of the lead or cable that is distal from the PATIENT; and

– contains a conductive part that is not separated from all PATIENT CONNECTION(S) by one MEANS OF PATIENT PROTECTION for a WORKING VOLTAGE equal to the MAXIMUM MAINS VOLTAGE.

Copyright International Electrotechnical Commission
Provided by IHS Markit under license with IEC
No reproduction or networking permitted without license from IHS Not for Resale, 08/26/2020 19:12:41 MDT

shall be constructed so that the said part cannot become connected to earth or possible hazardous voltage while the PATIENT CONNECTION(S) contact the PATIENT.

NOTE Where the phrase "said part" is mentioned in this subclause, it refers to the "...conductive part of the connector that is not separated from all PATIENT CONNECTIONS...." from the first sentence of this subclause.

In particular:

– the said part shall not come into contact with a flat conductive plate of not less than 100 mm diameter;

– the AIR CLEARANCE between connector pins and a flat surface shall be at least 0,5 mm;

– if able to be plugged into a mains socket, the said part shall be protected from making contact with parts at MAINS VOLTAGE by insulating means providing a CREEPAGE DISTANCE of at least 1,0 mm and a dielectric strength of 1 500 V and complying with 8.8.4.1;

– the straight unjointed test finger with the same dimensions as the standard test finger of Figure 6 shall not make electrical contact with the said part if applied in the least favourable position against the access openings with a force of 10 N, unless the RISK MANAGEMENT PROCESS demonstrates that no unacceptable RISK exists from contact with objects other than a mains socket or a flat surface (e.g. corners or edges).

Compliance is checked by inspection and test as required.

8.5.3 * MAXIMUM MAINS VOLTAGE

The MAXIMUM MAINS VOLTAGE shall be determined as follows:

– for single-phase or d.c. SUPPLY MAINS powered ME EQUIPMENT, including INTERNALLY POWERED ME EQUIPMENT that also has a means of connection to a SUPPLY MAINS, the MAXIMUM MAINS VOLTAGE is the highest RATED supply voltage; unless the highest RATED supply voltage is less than 100 V, in which case the MAXIMUM MAINS VOLTAGE is 240 V;

– for polyphase ME EQUIPMENT, the MAXIMUM MAINS VOLTAGE is the highest RATED phase to neutral supply voltage;

– for other INTERNALLY POWERED ME EQUIPMENT, the MAXIMUM MAINS VOLTAGE is 240 V.

8.5.4 * WORKING VOLTAGE

The WORKING VOLTAGE for each MEANS OF PROTECTION shall be determined as follows:

– For WORKING VOLTAGE measurement, all circuits shall be connected to earth with the exception of floating parts providing at least one MEANS OF PROTECTION to earth in which case the highest measured voltage on either side of the barrier is the WORKING VOLTAGE (see Figure 41).

Copyright International Electrotechnical Commission
Provided by IHS Markit under license with IEC
No reproduction or networking permitted without license from IHS Not for Resale, 08/26/2020 19:12:41 MDT

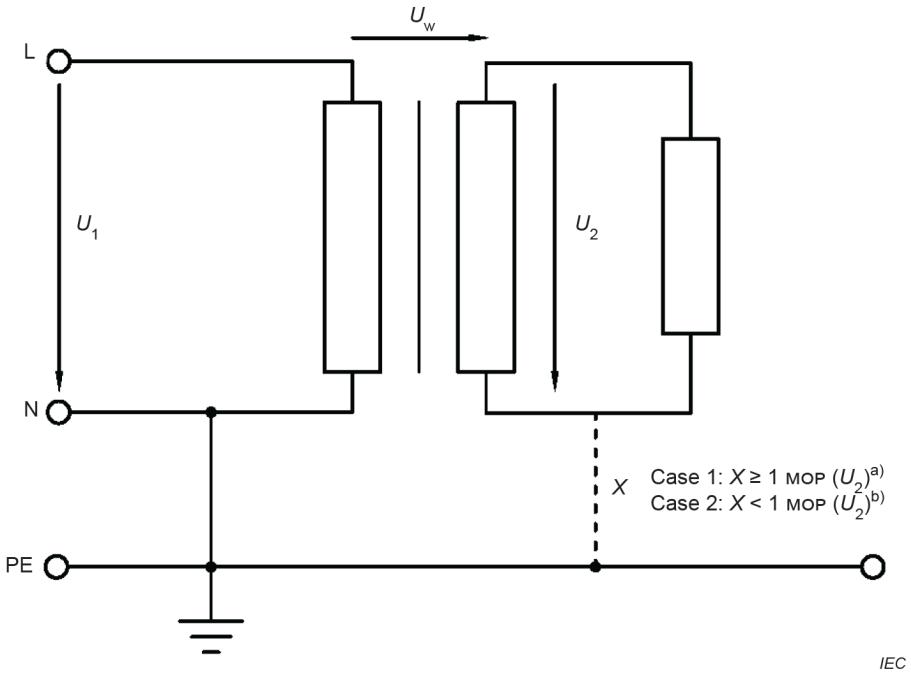

a) For Case 1, the floating circuit is isolated from earth by 1 MOP based on the floating circuit voltage U_2. The WORKING VOLTAGE (U_w) of the mains barrier is the highest voltage of one side of the barrier, i.e. U_1 or U_2 whichever is greater in magnitude.

b) For Case 2, the floating circuit is not isolated by at least 1 MOP to earth based on the floating circuit voltage U_2. For the measurement of the WORKING VOLTAGE (U_w) of the mains barrier both sides have to be earthed to obtain repeatable worst-case results.

Figure 41 – WORKING VOLTAGE measurement

– The input supply voltage to the ME EQUIPMENT shall be the RATED voltage or the voltage within the RATED voltage range which results in the highest measured value.

– For d.c. voltages with superimposed ripple, the WORKING VOLTAGE is the average value if the peak-to-peak ripple does not exceed 10 % of the average value or the peak voltage if the peak-to-peak ripple exceeds 10 % of the average value.

– The WORKING VOLTAGE for each MEANS OF PROTECTION forming DOUBLE INSULATION is the voltage to which the DOUBLE INSULATION as a whole is subjected.

– For WORKING VOLTAGE involving a PATIENT CONNECTION not connected to earth, the situation in which the PATIENT is earthed (intentionally or accidentally) is regarded as a NORMAL CONDITION.

– The WORKING VOLTAGE between the PATIENT CONNECTION(S) of an F-TYPE APPLIED PART and the ENCLOSURE is taken as the highest voltage appearing across the insulation in NORMAL USE including earthing of any part of the APPLIED PART. See also 8.5.2.1.

– For DEFIBRILLATION-PROOF APPLIED PARTS, the WORKING VOLTAGE is determined without regard to the possible presence of defibrillation voltages. See also 8.5.5 and 8.9.1.15.

– In the case of motors provided with capacitors where a resonance voltage can occur between the point where a winding and a capacitor are connected together on the one hand and any terminal for external conductors on the other hand, the WORKING VOLTAGE shall be equal to the resonance voltage.

8.5.5 DEFIBRILLATION-PROOF APPLIED PARTS

8.5.5.1 * Defibrillation protection

The classification DEFIBRILLATION-PROOF APPLIED PART shall apply to the whole of one APPLIED PART.

--`,,`,,`-`-`,,`,,`,`,,`---
Copyright International Electrotechnical Commission
Provided by IHS Markit under license with IEC
No reproduction or networking permitted without license from IHS
Not for Resale, 08/26/2020 19:12:41 MDT

See 8.9.1.15 for the requirements for CREEPAGE DISTANCES and AIR CLEARANCES associated with a DEFIBRILLATION-PROOF APPLIED PART.

Arrangements used to isolate the PATIENT CONNECTION(S) of a DEFIBRILLATION-PROOF APPLIED PART from other parts of ME EQUIPMENT shall be so designed that:

a) During a discharge of a cardiac defibrillator to a PATIENT connected to a DEFIBRILLATION-PROOF APPLIED PART, hazardous electrical energies, as determined by the peak voltage measured between the points Y_1 and Y_2 of Figure 9 and Figure 10 exceeding 1 V, do not appear on:
   – the ENCLOSURE, including connectors in PATIENT leads and cables when connected to the ME EQUIPMENT;

     NOTE 1 This requirement does not apply to a connecting lead from a DEFIBRILLATION-PROOF APPLIED PART or its connector when it is disconnected from the ME EQUIPMENT.

   – any SIGNAL INPUT/OUTPUT PART;
   – metal foil for test on which the ME EQUIPMENT is placed and which has an area at least equal to the base of the ME EQUIPMENT;
   – PATIENT CONNECTIONS of any other APPLIED PART (whether or not classified as a DEFIBRILLATION-PROOF APPLIED PART); or
   – any unused or disconnected connections of the APPLIED PART under test or any function of the same APPLIED PART. ME EQUIPMENT that is completely BODY-WORN (e.g. a Holter monitor) is exempt from this requirement.

b) Following exposure to the defibrillation voltage, and any necessary recovery time stated in the ACCOMPANYING DOCUMENTS, the ME EQUIPMENT shall comply with relevant requirements of this standard and shall continue to provide BASIC SAFETY and ESSENTIAL PERFORMANCE.

Compliance is checked by the following tests, for each DEFIBRILLATION-PROOF APPLIED PART in turn.

- ***Common-mode test***

The ME EQUIPMENT is connected to the test circuit as shown in Figure 9. The test voltage is applied to all the PATIENT CONNECTIONS of the DEFIBRILLATION-PROOF APPLIED PART connected together, excluding any that are PROTECTIVELY EARTHED or functionally earthed. If an APPLIED PART has multiple functions, the test voltage is applied to all the PATIENT CONNECTIONS of one function at a time with the other functions disconnected.

--`,,```,,,,````-`-`,,`,,`,`,,`---

Copyright International Electrotechnical Commission
Provided by IHS Markit under license with IEC
No reproduction or networking permitted without license from IHS Not for Resale, 08/26/2020 19:12:41 MDT

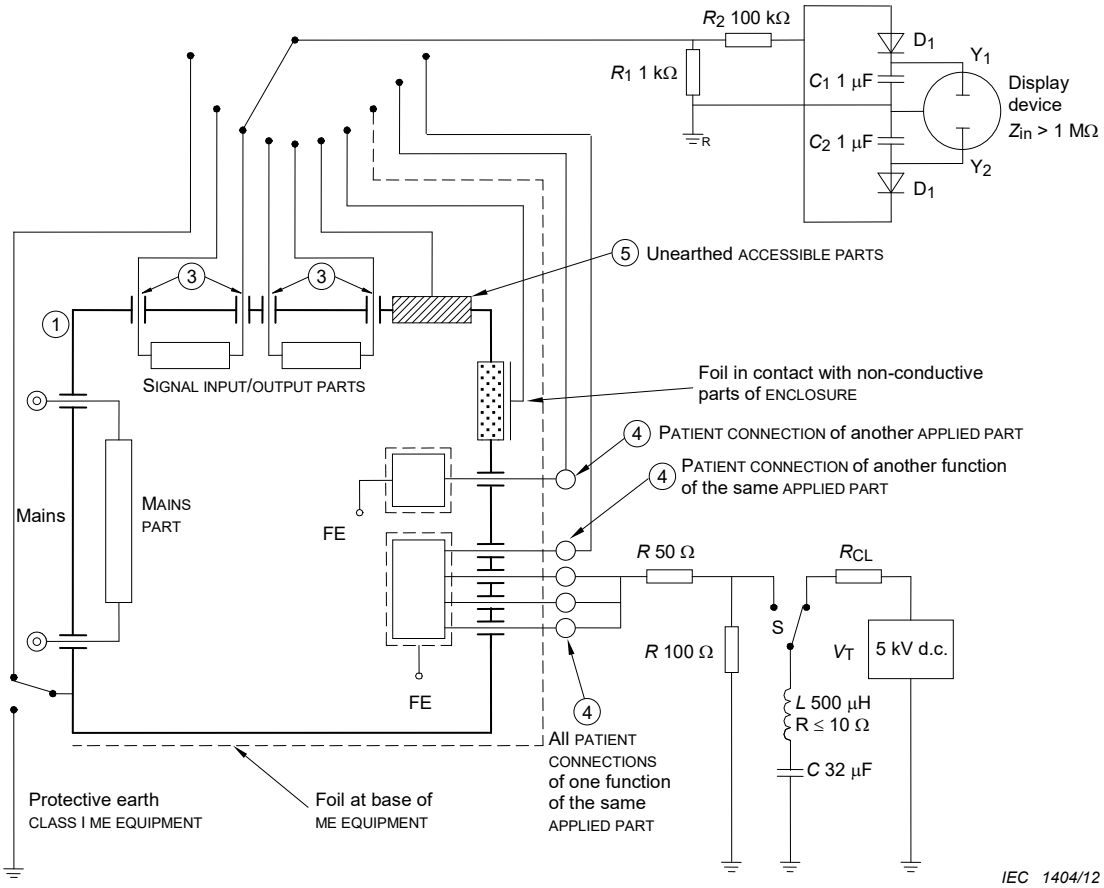

For legends, see Table 5.

Components

V_T	Test voltage
S	Switch for applying the test voltage
R_1, R_2	Tolerance at ± 2 %, not less than 2 kV
R_{CL}	Current limiting resistor
D_1, D_2	Small signal silicon diodes

Other components toleranced at ± 5 %

Figure 9 – Application of test voltage to bridged PATIENT CONNECTIONS for DEFIBRILLATION-PROOF APPLIED PARTS
(see 8.5.5.1)

Copyright International Electrotechnical Commission
Provided by IHS Markit under license with IEC
No reproduction or networking permitted without license from IHS
Not for Resale, 08/26/2020 19:12:41 MDT

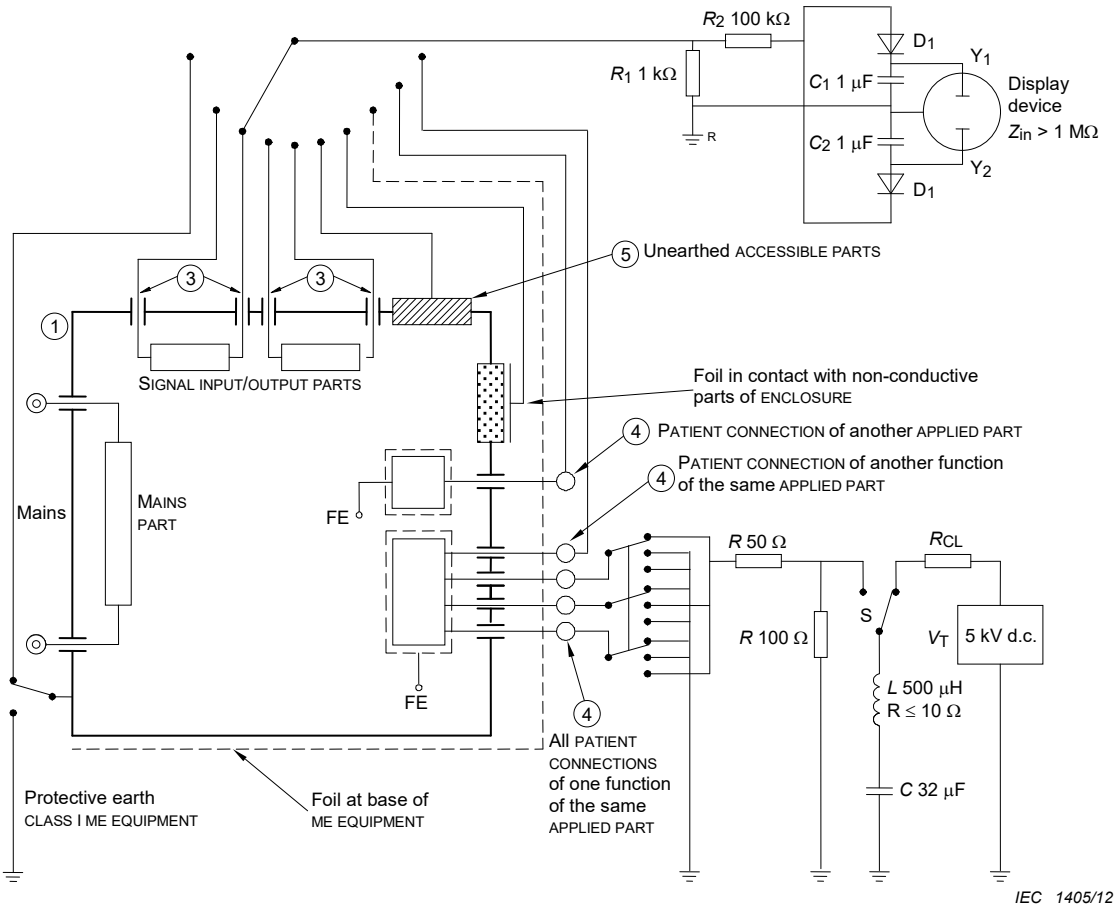

For legends, see Table 5.

Components

V_T	Test voltage
S	Switch for applying the test voltage
R_1, R_2	Tolerance at ± 2 %, not less than 2 kV
R_{CL}	Current limiting resistor
D_1, D_2	Small signal silicon diodes

Other components toleranced at ± 5 %

Figure 10 – Application of test voltage to individual PATIENT CONNECTIONS for DEFIBRILLATION-PROOF APPLIED PARTS
(see 8.5.5.1)

- ***Differential-mode test***

The ME EQUIPMENT is connected to the test circuit as shown in Figure 10. The test voltage is applied to each PATIENT CONNECTION of the DEFIBRILLATION-PROOF APPLIED PART in turn with all the remaining PATIENT CONNECTIONS of the same DEFIBRILLATION-PROOF APPLIED PART being connected to earth.

NOTE 2 The differential-mode test is not used when the APPLIED PART consists of a single PATIENT CONNECTION.

The differential-mode test shall not be performed on an APPLIED PART with multiple PATIENT CONNECTIONS if, based on the INTENDED USE, the PATIENT CONNECTIONS are intended to be completely within the body and in close proximity to each other where it can be assumed that they will all be at the same voltage potential when the PATIENT is defibrillated.

Copyright International Electrotechnical Commission
Provided by IHS Markit under license with IEC
No reproduction or networking permitted without license from IHS
Not for Resale, 08/26/2020 19:12:41 MDT

During the above tests:

– *except for PERMANENTLY INSTALLED ME EQUIPMENT, the ME EQUIPMENT is to be tested with and without the PROTECTIVE EARTH CONDUCTOR connected (i.e. two separate tests);*

– *insulating surfaces of APPLIED PARTS are covered with metal foil or, where appropriate, immersed in a 0,9 % saline solution;*

– *any external connection to a FUNCTIONAL EARTH TERMINAL is removed;*

– *parts specified 8.5.5.1 a) that are not PROTECTIVELY EARTHED are connected in turn to a display device;*

– *the ME EQUIPMENT is connected to the SUPPLY MAINS and operated in accordance with the instructions for use*.

After the operation of S, the peak voltage between the points Y_1 and Y_2 is measured. Each test is repeated with V_T reversed.

After any recovery time stated in the ACCOMPANYING DOCUMENTS, determine that the ME EQUIPMENT continues to provide BASIC SAFETY and ESSENTIAL PERFORMANCE.

8.5.5.2 Energy reduction test

DEFIBRILLATION-PROOF APPLIED PARTS or PATIENT CONNECTIONS of DEFIBRILLATION-PROOF APPLIED PARTS shall incorporate a means so that the defibrillator energy delivered to a 100 Ω load is at least 90 % of the energy delivered to this load with the ME EQUIPMENT disconnected.

If the INTENDED USE of one APPLIED PART with multiple PATIENT CONNECTIONS that are all within close proximity to each other and completely within the body, these PATIENT CONNECTIONS are treated as a single PATIENT CONNECTION.

Compliance is checked by the following test:

The test circuit is shown in Figure 11. For this test, the ACCESSORIES such as cables, electrodes and transducers that are recommended in the instructions for use (see 7.9.2.14) are used. The test voltage is applied to each PATIENT CONNECTION or APPLIED PART in turn with all the remaining PATIENT CONNECTIONS of the same APPLIED PART being connected to earth (differential mode). Other DEFIBRILLATION PROOF APPLIED PARTS, if any, are tested separately, in turn.

The PROCEDURE is as follows.

a) *Connect the APPLIED PART or PATIENT CONNECTION to the test circuit. The parts described in 8.5.5.1 a) are connected to earth.*

b) *Charge capacitor C to 5 kV d.c. with switch S in position A.*

c) *Discharge capacitor C by actuating the switch S to position B, and measure the energy E_1 delivered to the 100 Ω load.*

d) *Remove the ME EQUIPMENT under test from the test circuit and repeat steps b) and c) above, measuring the energy E_2 delivered to the 100 Ω load.*

e) *Verify that the energy E_1 is at least 90 % of E_2.*

f) *Repeat the test with V_T reversed.*

Copyright International Electrotechnical Commission
Provided by IHS Markit under license with IEC
No reproduction or networking permitted without license from IHS Not for Resale, 08/26/2020 19:12:41 MDT

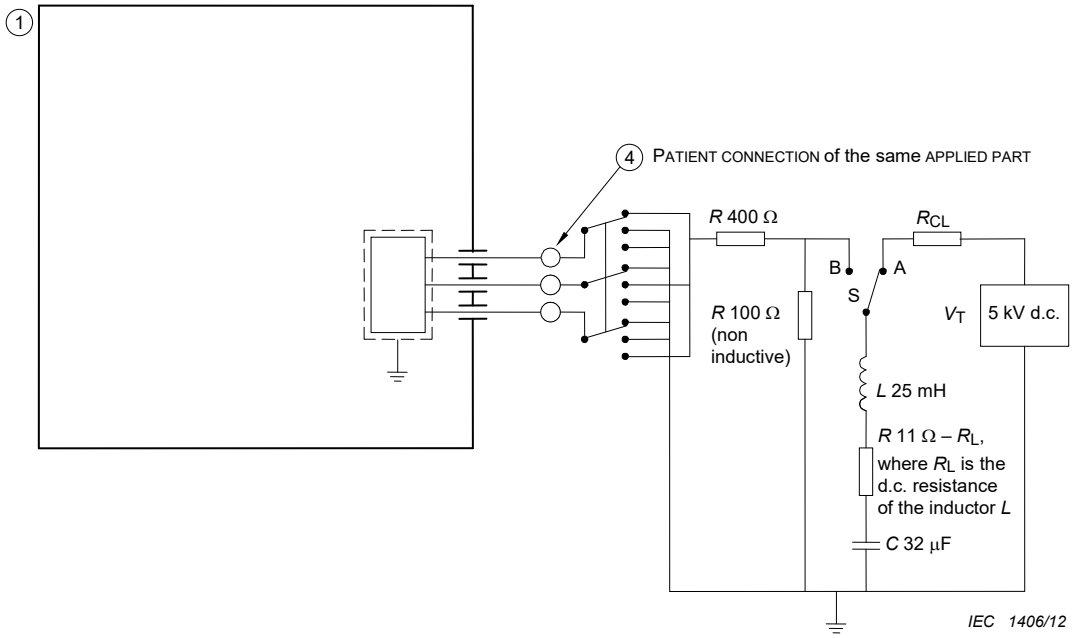

For legends, see Table 5.

Components

S Switch for applying the test energy

A, B Switch positions

R_{CL} Current limiting resistor

Components toleranced at ± 5 %

Figure 11 – Application of test voltage to test the delivered defibrillation energy
(see 8.5.5.2)

8.6 * Protective earthing, functional earthing and potential equalization of ME EQUIPMENT

8.6.1 * Applicability of requirements

The requirements of 8.6.2 to 8.6.8 (inclusive) apply unless the parts concerned comply with the requirements and tests of IEC 60950-1:2005, IEC 60950-1:2005/AMD1:2009 and IEC 60950-1:2005/AMD2:2013 or IEC 62368-1:2018 for protective earthing and serve as MEANS OF OPERATOR PROTECTION but not as MEANS OF PATIENT PROTECTION.

8.6.2 * PROTECTIVE EARTH TERMINAL

The PROTECTIVE EARTH TERMINAL of ME EQUIPMENT shall be suitable for connection to an external protective earthing system either by a PROTECTIVE EARTH CONDUCTOR in a POWER SUPPLY CORD and, where appropriate, by a suitable plug, or by a FIXED PROTECTIVE EARTH CONDUCTOR.

The clamping means of the PROTECTIVE EARTH TERMINAL of ME EQUIPMENT for FIXED supply conductors or POWER SUPPLY CORDS shall comply with the requirements of 8.11.4.3. It shall not be possible to loosen the clamping means without the aid of a TOOL.

Screws for internal PROTECTIVE EARTH CONNECTIONS shall be completely covered or protected against accidental loosening from the outside of ME EQUIPMENT.

Where an APPLIANCE INLET forms the supply connection to ME EQUIPMENT, the earth pin of the APPLIANCE INLET shall be regarded as the PROTECTIVE EARTH TERMINAL.

The PROTECTIVE EARTH TERMINAL shall not be used for the mechanical connection between different parts of the ME EQUIPMENT or the fixing of any component not related to protective earthing or functional earthing.

Copyright International Electrotechnical Commission
Provided by IHS Markit under license with IEC
No reproduction or networking permitted without license from IHS Not for Resale, 08/26/2020 19:12:41 MDT

Compliance is checked by inspection of materials and construction, by manual tests, and by the test of 8.11.4.3.

8.6.3 * Protective earthing of moving parts

Any PROTECTIVE EARTH CONNECTION shall not be used for a moving part unless the MANUFACTURER demonstrates that the connection will remain reliable during the EXPECTED SERVICE LIFE of the ME EQUIPMENT.

Compliance is checked by inspection of the ME EQUIPMENT and if necessary inspection of the RISK MANAGEMENT FILE.

8.6.4 Impedance and current-carrying capability

a) * PROTECTIVE EARTH CONNECTIONS shall be able to carry fault currents reliably and without excessive voltage drop.

For PERMANENTLY INSTALLED ME EQUIPMENT, the impedance between the PROTECTIVE EARTH TERMINAL and any part that is PROTECTIVELY EARTHED shall not exceed 100 mΩ, except as allowed by 8.6.4 b).

For ME EQUIPMENT with an APPLIANCE INLET the impedance between the earth pin in the APPLIANCE INLET and any part that is PROTECTIVELY EARTHED shall not exceed 100 mΩ, except as allowed by 8.6.4 b).

For ME EQUIPMENT with a non-DETACHABLE POWER SUPPLY CORD the impedance between the protective earth pin in the MAINS PLUG and any part that is PROTECTIVELY EARTHED shall not exceed 200 mΩ, except as allowed by 8.6.4 b).

Additionally, the impedance between the protective earth pin in the MAINS PLUG of any DETACHABLE POWER SUPPLY CORD supplied or specified by the MANUFACTURER, when attached to the ME EQUIPMENT, and any part of the ME EQUIPMENT that is PROTECTIVELY EARTHED shall not exceed 200 mΩ, except as allowed by 8.6.4 b).

Testing shall be carried out using a DETACHABLE POWER SUPPLY CORD as provided or specified (length and cross-sectional area) by the MANUFACTURER.

Compliance is checked by the following test:

A current of 25 A or 1,5 times the highest RATED current of the relevant circuit(s), whichever is greater (± 10 %), from a current source with a frequency of 50 Hz or 60 Hz and with a no-load voltage not exceeding 6 V, is passed for 5 s to 10 s through the PROTECTIVE EARTH TERMINAL or the protective earth contact in the APPLIANCE INLET or the protective earth pin in the MAINS PLUG and each PROTECTIVELY EARTHED part.

Alternatively, d.c. may be used for this test.

The highest RATED current is the RATED current of the over-current protection in the ME EQUIPMENT, when present, for all circuits located behind the over-current protection. From the SUPPLY MAINS to the over-current protection in the ME EQUIPMENT, the highest RATED current is the RATED current of the over-current protection device in the building installation.

NOTE When protective earth is relied on as a MEANS OF PROTECTION, the test current is determined based on the location where a fault could occur. If the prospective fault is in the mains supply circuit prior to the over-current protection included in the ME EQUIPMENT, the test current for that part of the protective earth circuit is based on the rating of the external over-current protection included in the building infrastructure or specified in the ACCOMPANYING DOCUMENTS (1,5 times the interrupt rating of the external over-current protection). If the prospective fault is in the mains supply circuit after the over-current protection included in the ME EQUIPMENT, the test current is based on the rating of the over-current protection included in the ME EQUIPMENT (1,5 times the interrupt rating of the ME EQUIPMENT over-current protection). In either case, the minimum test current is 25 A.

Copyright International Electrotechnical Commission
Provided by IHS Markit under license with IEC
No reproduction or networking permitted without license from IHS Not for Resale, 08/26/2020 19:12:41 MDT

The voltage drop between the parts described is measured and the impedance determined from the current and voltage drop.

Where the product of the test current as specified above and the total impedance (i.e. the impedance being measured plus the impedance of the test leads and the contact impedances) would exceed 6 V, the impedance is first measured with a no-load voltage not exceeding 6 V.

If the measured impedance is within the permitted limit, either the impedance measurement is then repeated using a current source with a no-load voltage sufficient to deliver the specified current into the total impedance, or the current-carrying ability of the relevant protective earth conductor and protective earth connection is confirmed by checking that their cross sectional area is at least equal to that of the relevant current-carrying conductors.

b) * The impedance of PROTECTIVE EARTH CONNECTIONS is allowed to exceed the values specified above if the relevant circuits have limited current capability such that, in case of short circuit of relevant insulation, the allowable values of the TOUCH CURRENT and the PATIENT LEAKAGE CURRENT in SINGLE FAULT CONDITION are not exceeded.

Compliance is checked by inspection and if necessary by measurement of LEAKAGE CURRENT in the relevant SINGLE FAULT CONDITION. Transient currents occurring during the first 50 ms following the short circuit are disregarded.

8.6.5 Surface coatings

Conductive elements of ME EQUIPMENT that have surface coatings of poorly conducting material such as paint, and between which electrical contact is essential to a PROTECTIVE EARTH CONNECTION, shall have the coatings removed at the point of contact unless an investigation of the joint construction and the manufacturing PROCESS has demonstrated that the requirements for impedance and current-carrying capacity are assured without the removal of the surface coating.

Compliance is checked by inspection.

8.6.6 Plugs and sockets

Where the connection between the SUPPLY MAINS and ME EQUIPMENT or between separate parts of ME EQUIPMENT that can be operated by persons other than SERVICE PERSONNEL is made via a plug and socket device, the PROTECTIVE EARTH CONNECTION shall be made before and interrupted after the supply connections are made or interrupted. This applies also where interchangeable parts are PROTECTIVELY EARTHED.

Compliance is checked by inspection.

8.6.7 * POTENTIAL EQUALIZATION CONDUCTOR

If ME EQUIPMENT is provided with a terminal for the connection of a POTENTIAL EQUALIZATION CONDUCTOR, the following requirements apply.

– The terminal shall be accessible to the OPERATOR with the ME EQUIPMENT in any position of NORMAL USE.

– Accidental disconnection shall be avoided in NORMAL USE.

– The terminal shall allow the conductor to be detached without the use of a TOOL.

– The terminal shall not be used for a PROTECTIVE EARTH CONNECTION.

– The terminal shall be marked with symbol IEC 60417-5021 (2002-10) (see Table D.1, symbol 8).

– The instructions for use shall contain information on the function and use of the POTENTIAL EQUALIZATION CONDUCTOR together with a reference to the requirements of this standard for ME SYSTEMS.

Copyright International Electrotechnical Commission
Provided by IHS Markit under license with IEC
No reproduction or networking permitted without license from IHS Not for Resale, 08/26/2020 19:12:41 MDT

The POWER SUPPLY CORD shall not incorporate a POTENTIAL EQUALIZATION CONDUCTOR.

Compliance is checked by inspection.

8.6.8 FUNCTIONAL EARTH TERMINAL

A FUNCTIONAL EARTH TERMINAL of ME EQUIPMENT shall not be used to provide a PROTECTIVE EARTH CONNECTION.

Compliance is checked by inspection.

8.6.9 * CLASS II ME EQUIPMENT

If CLASS II ME EQUIPMENT with isolated internal screens is supplied with a POWER SUPPLY CORD having three conductors, the third conductor (connected to the protective earth contact of the MAINS PLUG) shall be used only as the functional earth connection to a FUNCTIONAL EARTH TERMINAL for these screens and shall be coloured green and yellow. In such a case, the ACCOMPANYING DOCUMENTS shall state that the third conductor in the POWER SUPPLY CORD is only a functional earth.

The insulation between internal screens, including internal wiring connected to them and ACCESSIBLE PARTS, shall provide two MEANS OF PROTECTION.

Compliance is checked by inspection and measurement. The insulation is tested as described in 8.8.

8.7 LEAKAGE CURRENTS and PATIENT AUXILIARY CURRENTS

8.7.1 General requirements

a) The electrical isolation providing protection against electric shock shall be of such quality that currents flowing through it are limited to the values specified in 8.7.3.

b) The specified values of the EARTH LEAKAGE CURRENT, the TOUCH CURRENT, the PATIENT LEAKAGE CURRENT and the PATIENT AUXILIARY CURRENT apply in any combination of the following conditions:
   - at operating temperature and following the humidity preconditioning treatment, as described in 5.7;
   - after any required sterilization PROCEDURE (see 11.6.7);
   - in NORMAL CONDITION and in the SINGLE FAULT CONDITIONS specified in 8.7.2;
   - with ME EQUIPMENT energized in stand-by condition and fully operating and with any switch in the MAINS PART in any position;
   - with the highest RATED supply frequency;
   - with a supply equal to 110 % of the highest RATED MAINS VOLTAGE.

8.7.2 * SINGLE FAULT CONDITIONS

The allowable values specified in 8.7.3 apply in the SINGLE FAULT CONDITIONS specified in 8.1 b) except that:

- where insulation is used in conjunction with a PROTECTIVE EARTH CONNECTION, short circuit of the insulation applies only in the circumstances specified in 8.6.4 b);
- the only SINGLE FAULT CONDITION for the EARTH LEAKAGE CURRENT is the interruption of one supply conductor at a time;
- LEAKAGE CURRENTS and PATIENT AUXILIARY CURRENT are not measured in the SINGLE FAULT CONDITION of short circuiting of one constituent part of DOUBLE INSULATION.

Copyright International Electrotechnical Commission
Provided by IHS Markit under license with IEC
No reproduction or networking permitted without license from IHS Not for Resale, 08/26/2020 19:12:41 MDT

SINGLE FAULT CONDITIONS shall not be applied at the same time as the special test conditions of MAXIMUM MAINS VOLTAGE on APPLIED PARTS (8.7.4.7 b)) and non-PROTECTIVELY EARTHED parts of the ENCLOSURE (8.7.4.7 d)).

8.7.3 * Allowable values

a) The allowable values specified in 8.7.3 b), c) and d) apply to currents flowing through the network of Figure 12 a) and measured as shown in this figure (or by a device measuring the frequency contents of the currents as defined in Figure 12 b)). The values apply to d.c. and a.c. and composite waveforms. Unless stated otherwise they may be d.c. or r.m.s.

b) The allowable values of the PATIENT LEAKAGE CURRENTS and PATIENT AUXILIARY CURRENTS are stated in Table 3 and Table 4. The values of a.c. apply to currents having a frequency not less than 0,1 Hz.

c) The allowable values of the TOUCH CURRENT are 100 μA in NORMAL CONDITION and 500 μA in SINGLE FAULT CONDITION.

d) The allowable values of the EARTH LEAKAGE CURRENT are 5 mA in NORMAL CONDITION and 10 mA in SINGLE FAULT CONDITION. For PERMANENTLY INSTALLED ME EQUIPMENT connected to a supply circuit that supplies only this ME EQUIPMENT, a higher value of EARTH LEAKAGE CURRENT is allowed.

NOTE 1 Local regulation can establish limits for protective earth currents of the installation. See also IEC 60364-7-710 [10].

NOTE 2 The EARTH LEAKAGE CURRENT in NORMAL CONDITION can become TOUCH CURRENT in SINGLE FAULT CONDITION unless the ME EQUIPMENT is PERMANENTLY INSTALLED or the protective earth is not accessible from outside the ME EQUIPMENT.

e) Additionally, regardless of waveform and frequency, LEAKAGE CURRENT shall not exceed 10 mA r.m.s. in NORMAL CONDITION or in SINGLE FAULT CONDITION when measured with a non-frequency-weighted device, such as a measuring device similar to that shown in Figure 12 a) but without C_1 and R_1.

f) *. The allowable values of LEAKAGE CURRENTS that can flow in a FUNCTIONAL EARTH CONDUCTOR in a non-PERMANENTLY INSTALLED ME EQUIPMENT are 5 mA in NORMAL CONDITION and 10 mA in SINGLE FAULT CONDITION.

NOTE 3 Subclause 16.6.1 requires that when ME EQUIPMENT is included in an ME SYSTEM, the TOUCH CURRENTS from any part of the ME SYSTEM cannot exceed 100 μA in NORMAL CONDITION and 500 μA in SINGLE FAULT CONDITION.

Copyright International Electrotechnical Commission
Provided by IHS Markit under license with IEC
No reproduction or networking permitted without license from IHS
Not for Resale, 08/26/2020 19:12:41 MDT

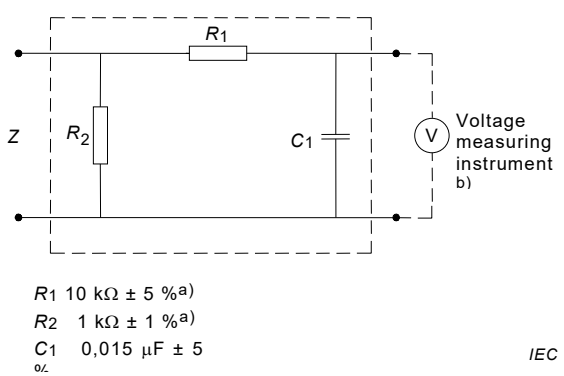

a) Measuring device

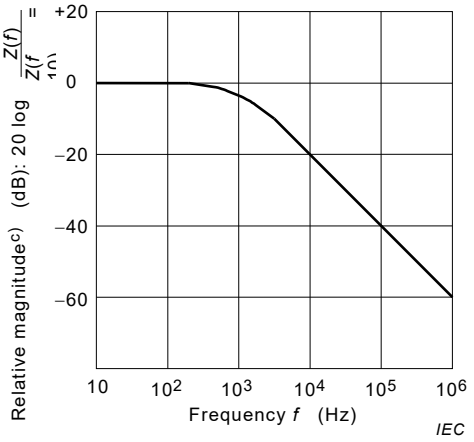

b) Frequency characteristics

NOTE The network and voltage measuring instrument above are replaced by the symbol

in the following figures.

a) Non-inductive components
b) Resistance ≥ 1 MΩ and capacitance ≤ 150 pF
c) $Z(f)$ is the transfer impedance of the network, i.e. V_{out}/I_{in}, for a current of frequency f.

Figure 12 – Example of a measuring device and its frequency characteristics
(see 8.7.3)

Copyright International Electrotechnical Commission
Provided by IHS Markit under license with IEC
No reproduction or networking permitted without license from IHS
Not for Resale, 08/26/2020 19:12:41 MDT

Table 3 – * Allowable values of PATIENT LEAKAGE CURRENTS and PATIENT AUXILIARY CURRENTS under NORMAL CONDITION and SINGLE FAULT CONDITION

Current in μA

Current	Description	Reference	Measuring Circuit		TYPE B APPLIED PART		TYPE BF APPLIED PART		TYPE CF APPLIED PART	
					NC	SFC	NC	SFC	NC	SFC
PATIENT AUXILIARY CURRENT		8.7.4.8	Figure 19	d.c.	10	50	10	50	10	50
				a.c.	100	500	100	500	10	50
PATIENT LEAKAGE CURRENT	From PATIENT CONNECTION to earth	8.7.4.7 a)	Figure 15	d.c.	10	50	10	50	10	50
				a.c.	100	500	100	500	10	50
	Caused by an external voltage on a SIP/SOP	8.7.4.7 c)	Figure 17	d.c.	10	50	10	50	10	50
				a.c.	100	500	100	500	10	50
Total PATIENT LEAKAGE CURRENT [a]	With the same types of APPLIED PART connected together	8.7.4.7 a) and 8.7.4.7 h)	Figure 15 and Figure 20	d.c.	50	100	50	100	50	100
				a.c.	500	1 000	500	1 000	50	100
	Caused by an external voltage on a SIP/SOP	8.7.4.7 c) and 8.7.4.7 h)	Figure 17 and Figure 20	d.c.	50	100	50	100	50	100
				a.c.	500	1 000	500	1 000	50	100

Key
NC = NORMAL CONDITION
SFC = SINGLE FAULT CONDITION

NOTE 1 For EARTH LEAKAGE CURRENT see 8.7.3 d).

NOTE 2 For TOUCH CURRENT see 8.7.3 c).

[a] Total PATIENT LEAKAGE CURRENT values are only applicable to equipment having multiple APPLIED PARTS. See 8.7.4.7 h). The individual APPLIED PARTS shall comply with the PATIENT LEAKAGE CURRENT values.

Copyright International Electrotechnical Commission
Provided by IHS Markit under license with IEC
No reproduction or networking permitted without license from IHS
Not for Resale, 08/26/2020 19:12:41 MDT

Table 4 – * Allowable values of PATIENT LEAKAGE CURRENTS under the special test conditions identified in 8.7.4.7

Current in μA

Current	Description [a]	Reference	Measuring Circuit	TYPE B APPLIED PART	TYPE BF APPLIED PART	TYPE CF APPLIED PART
PATIENT LEAKAGE CURRENT	Caused by an external voltage on the PATIENT CONNECTION of an F-TYPE APPLIED PART	8.7.4.7 b)	Figure 16	Not applicable	5 000	50
	Caused by an external voltage on a metal ACCESSIBLE PART not PROTECTIVELY EARTHED	8.7.4.7 d)	Figure 18	500	500	– [c]
Total PATIENT LEAKAGE CURRENT [b]	Caused by an external voltage on the PATIENT CONNECTION of an F-TYPE APPLIED PART	8.7.4.7 b) and 8.7.4.7 h)	Figure 16 and Figure 20	Not applicable	5 000	100
	Caused by an external voltage on a metal ACCESSIBLE PART not PROTECTIVELY EARTHED	8.7.4.7 d) and 8.7.4.7 h)	Figure 18 and Figure 20	1 000	1 000	– [c]

[a] The condition referred to in Table IV of the second edition as "MAINS VOLTAGE on APPLIED PART", and treated in that edition as a SINGLE FAULT CONDITION, is treated in this edition as a special test condition. The test with MAXIMUM MAINS VOLTAGE on a non-PROTECTIVELY EARTHED ACCESSIBLE PART is also a special test condition, but the allowable values are the same as for SINGLE FAULT CONDITION. See also the rationales for 8.5.2.2 and 8.7.4.7 d).

[b] Total PATIENT LEAKAGE CURRENT values are only applicable to equipment having multiple APPLIED PARTS. See 8.7.4.7 h). The individual APPLIED PARTS shall comply with the PATIENT LEAKAGE CURRENT values.

[c] This condition is not tested with TYPE CF APPLIED PARTS because it is covered by the test with MAXIMUM MAINS VOLTAGE on the APPLIED PART. See also the rationale for 8.7.4.7 d).

8.7.4 Measurements

8.7.4.1 General

The LEAKAGE CURRENT and PATIENT AUXILIARY CURRENT test figures referenced in 8.7.4.5 to 8.7.4.8 (Figure 13 to Figure 19 inclusive) show suitable test configurations for use in conjunction with the test PROCEDURES specified in these subclauses. It is recognized that other test figures can yield accurate results. However if the test results are close to the allowed values or if there is any doubt as to the validity of the test results, the applicable test figure is to be used as the deciding factor.

a) The EARTH LEAKAGE CURRENT, the TOUCH CURRENT, the PATIENT LEAKAGE CURRENT and the PATIENT AUXILIARY CURRENT are measured after the ME EQUIPMENT has been brought up to operating temperature in accordance with the requirements of 11.1.3 c).

b) Where examination of the circuit arrangement and the arrangement of components and material of the ME EQUIPMENT shows no possibility of any HAZARDOUS SITUATION described in 13.1, the number of tests can be reduced.

--`,,`,,`-`-`,,`,,`,`,,`---

Copyright International Electrotechnical Commission
Provided by IHS Markit under license with IEC
No reproduction or networking permitted without license from IHS Not for Resale, 08/26/2020 19:12:41 MDT

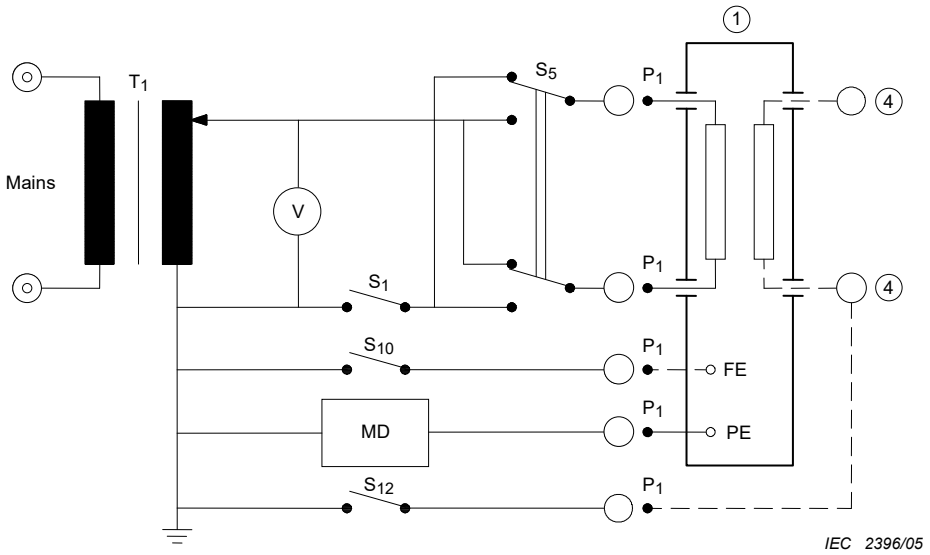

For legends, see Table 5.

Key

Measure in all possible combinations of positions of S_5, S_{10} and S_{12} with:

S_1 closed (NORMAL CONDITION), and
S_1 open (SINGLE FAULT CONDITION).

Example with the measuring supply circuit of Figure F.1

Figure 13 – Measuring circuit for EARTH LEAKAGE CURRENT of CLASS I ME EQUIPMENT, with or without APPLIED PART
(see 8.7.4.5)

Copyright International Electrotechnical Commission
Provided by IHS Markit under license with IEC
No reproduction or networking permitted without license from IHS
Not for Resale, 08/26/2020 19:12:41 MDT

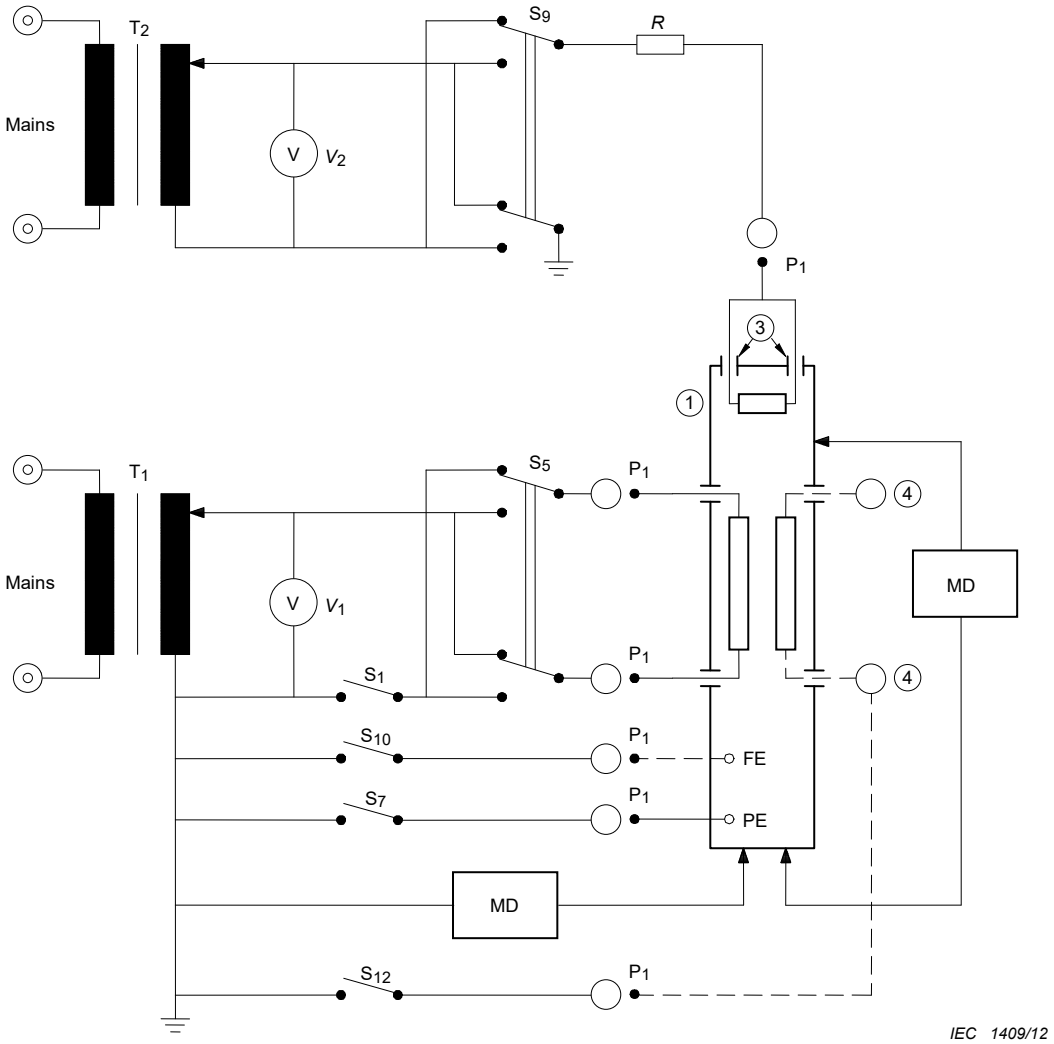

For legends, see Table 5.

Key

Measure (with S_7 closed if CLASS I ME equipment) under all possible combinations of positions of S_1, S_5, S_9, S_{10}, and S_{12}.

S_1 open is SINGLE FAULT CONDITION.

CLASS I ME equipment only:
Measure with S_7 open (SINGLE FAULT CONDITION) and with S_1 closed under all possible combinations of S_5, S_9, S_{10} and S_{12}.

For CLASS II ME equipment, the PROTECTIVE EARTH CONNECTION and S_7 are not used.

Transformer T_2 is used if required (see 8.1 a))

Example with the measuring supply circuit of Figure F.1.

Figure 14 – Measuring circuit for TOUCH CURRENT
(see 8.7.4.6)

--`,,`,,`-`-`,,`,,`,`,,`---

Copyright International Electrotechnical Commission
Provided by IHS Markit under license with IEC
No reproduction or networking permitted without license from IHS Not for Resale, 08/26/2020 19:12:41 MDT

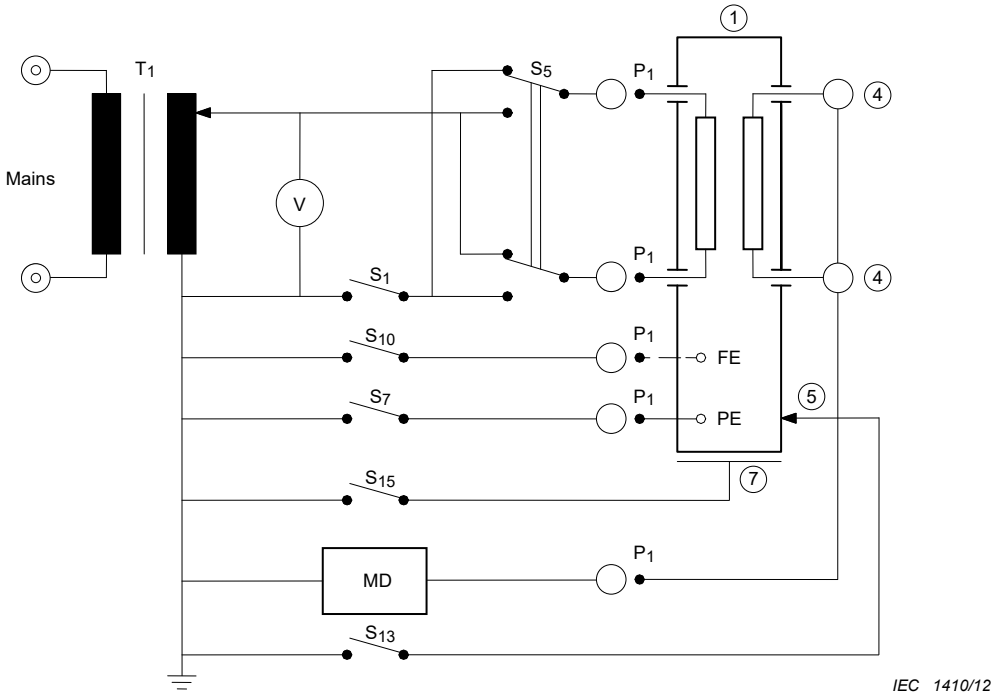

For legends, see Table 5.

Key

Measure (with S_7 closed if CLASS I ME EQUIPMENT) under all possible combinations of positions of S_1, S_5, S_{10}, S_{13} and S_{15}.

S_1 open is SINGLE FAULT CONDITION.

CLASS I ME EQUIPMENT only:
Measure with S_7 open (SINGLE FAULT CONDITION) and with S_1 closed under all possible combinations of S_5, S_{10}, S_{13} and S_{15}.

For CLASS II ME EQUIPMENT, the PROTECTIVE EARTH CONNECTION and S_7 are not used.

Example with the measuring supply circuit of Figure F.1.

Figure 15 – Measuring circuit for PATIENT LEAKAGE CURRENT from the PATIENT CONNECTION to earth
(see 8.7.4.7 a))

Copyright International Electrotechnical Commission
Provided by IHS Markit under license with IEC
No reproduction or networking permitted without license from IHS
Not for Resale, 08/26/2020 19:12:41 MDT

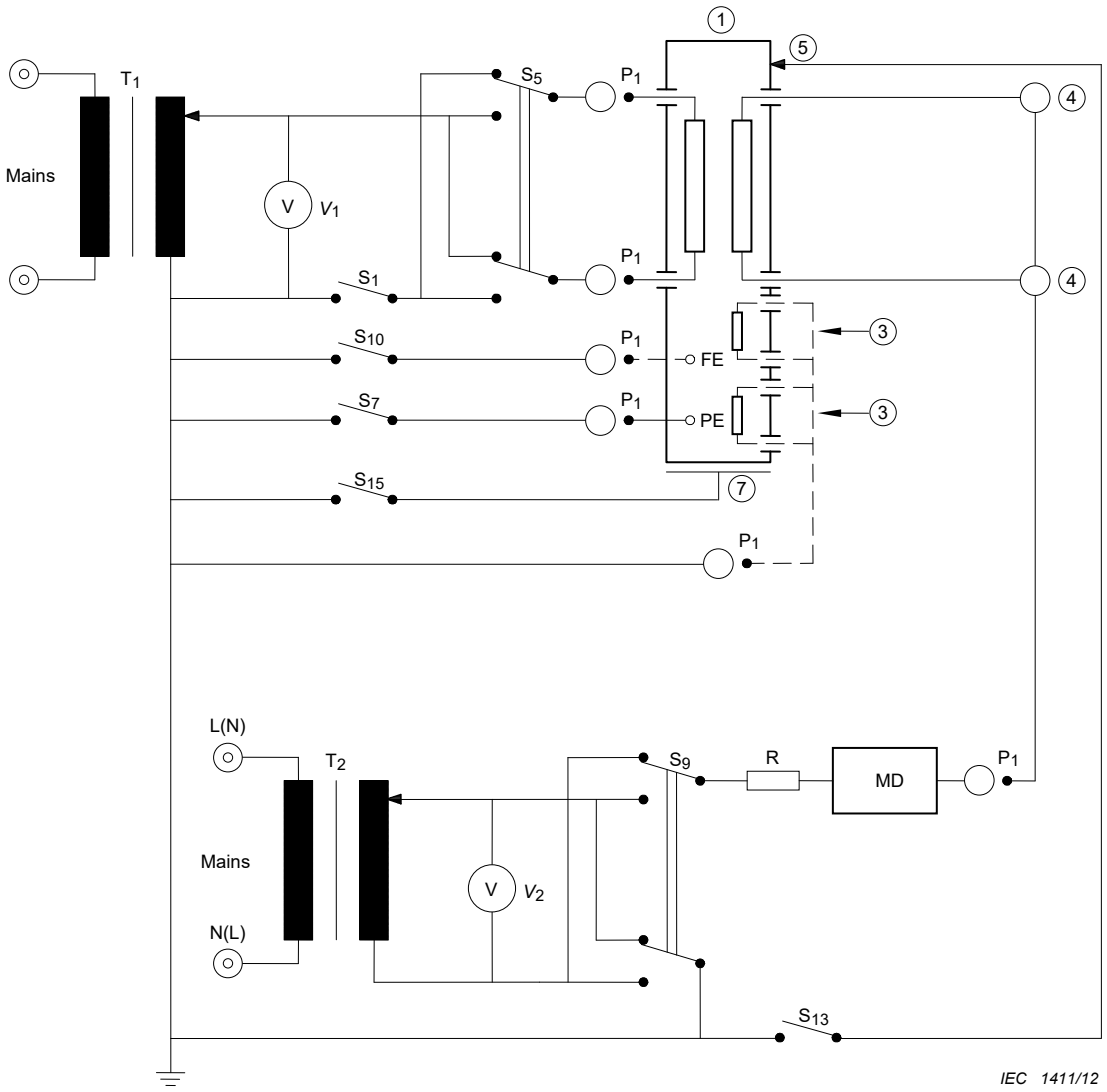

For legends, see Table 5.

Key

Measure (with S_7 closed, if CLASS I ME EQUIPMENT) WITH S_1 closed under all possible combinations of positions of S_5, S_9, S_{10} and S_{13}.

For CLASS II ME EQUIPMENT, the PROTECTIVE EARTH CONNECTION and S_7 are not used.

Example with the measuring supply circuit of Figure F.1.

Figure 16 – Measuring circuit for PATIENT LEAKAGE CURRENT via the PATIENT CONNECTION(S) of an F-TYPE APPLIED PART to earth caused by an external voltage on the PATIENT CONNECTION(S)
(see 8.7.4.7 b))

--`,,`,,`-`-`,,`,,`,`,,`---

Copyright International Electrotechnical Commission
Provided by IHS Markit under license with IEC
No reproduction or networking permitted without license from IHS
Not for Resale, 08/26/2020 19:12:41 MDT

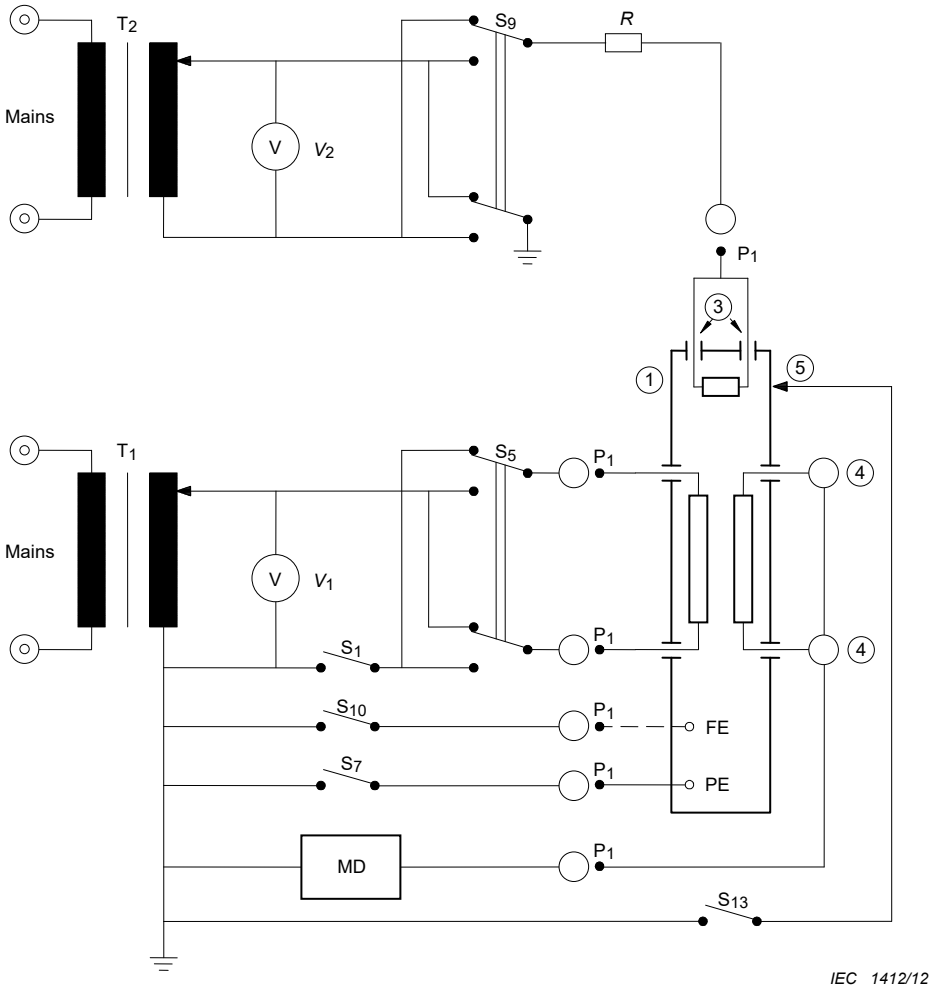

For legends, see Table 5.

Key

Measure (with S_7 closed, if CLASS I ME EQUIPMENT) under all possible combinations of positions of S_1, S_5, S_9, S_{10} and S_{13} (S_1 open is SINGLE FAULT CONDITION).

CLASS I ME EQUIPMENT only:
Measure with S_7 open (SINGLE FAULT CONDITION) and with S_1 closed under all possible combinations of S_5, S_9, S_{10} and S_{13}.

For CLASS II ME EQUIPMENT, the PROTECTIVE EARTH CONNECTION and S_7 are not used.

Example with the measuring supply circuit of Figure F.1.

Figure 17 – Measuring circuit for PATIENT LEAKAGE CURRENT from PATIENT CONNECTION(S) to earth caused by an external voltage on a SIGNAL INPUT/OUTPUT PART
(see 8.7.4.7 c))

Copyright International Electrotechnical Commission
Provided by IHS Markit under license with IEC
No reproduction or networking permitted without license from IHS
Not for Resale, 08/26/2020 19:12:41 MDT

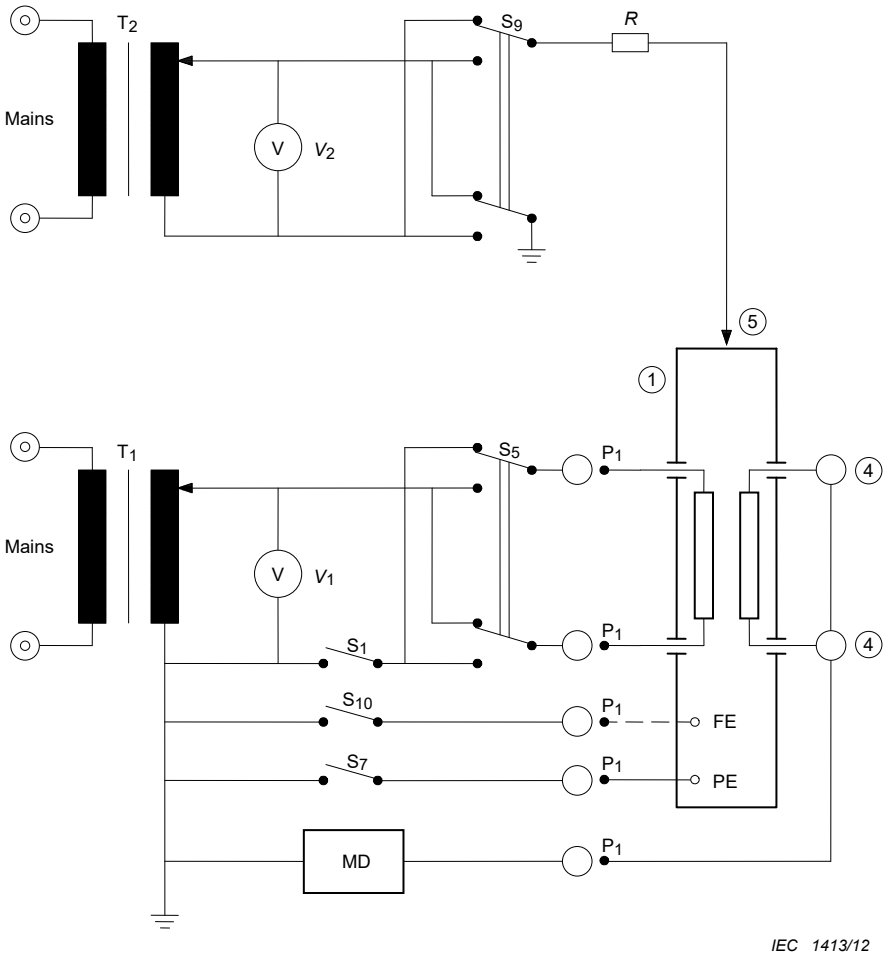

For legends, see Table 5.

Key

Measure with S_1 closed (and with S_7 closed, if CLASS I ME EQUIPMENT) under all possible combinations of positions of S_5, S_9 and S_{10}

For CLASS II ME EQUIPMENT, the PROTECTIVE EARTH CONNECTION and S_7 are not used.

Example with the measuring supply circuit of Figure F.1.

Figure 18 – Measuring circuit for PATIENT LEAKAGE CURRENT from PATIENT CONNECTION(S) to earth caused by an external voltage on a metal ACCESSIBLE PART that is not PROTECTIVELY EARTHED
(see 8.7.4.7 d))

Copyright International Electrotechnical Commission
Provided by IHS Markit under license with IEC
No reproduction or networking permitted without license from IHS
Not for Resale, 08/26/2020 19:12:41 MDT

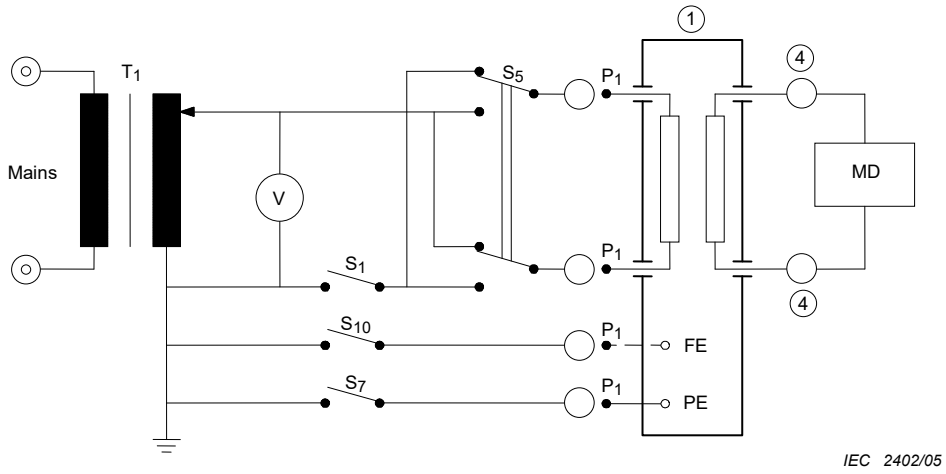

For legends, see Table 5.

Key

Measure (with S_7 closed if CLASS I ME EQUIPMENT) under all possible combinations of positions of S_1, S_5, and S_{10}.

S_1 open is a SINGLE FAULT CONDITION.

CLASS I ME EQUIPMENT only:
Measure with S_7 open (SINGLE FAULT CONDITION) and with S_1 closed under all possible combinations of positions of S_5, and S_{10}.

For CLASS II ME EQUIPMENT, the PROTECTIVE EARTH CONNECTION and S_7 are not used.

Example with the measuring supply circuit of Figure F.1.

Figure 19 – Measuring circuit for PATIENT AUXILIARY CURRENT
(see 8.7.4.8)

Copyright International Electrotechnical Commission
Provided by IHS Markit under license with IEC
No reproduction or networking permitted without license from IHS
Not for Resale, 08/26/2020 19:12:41 MDT

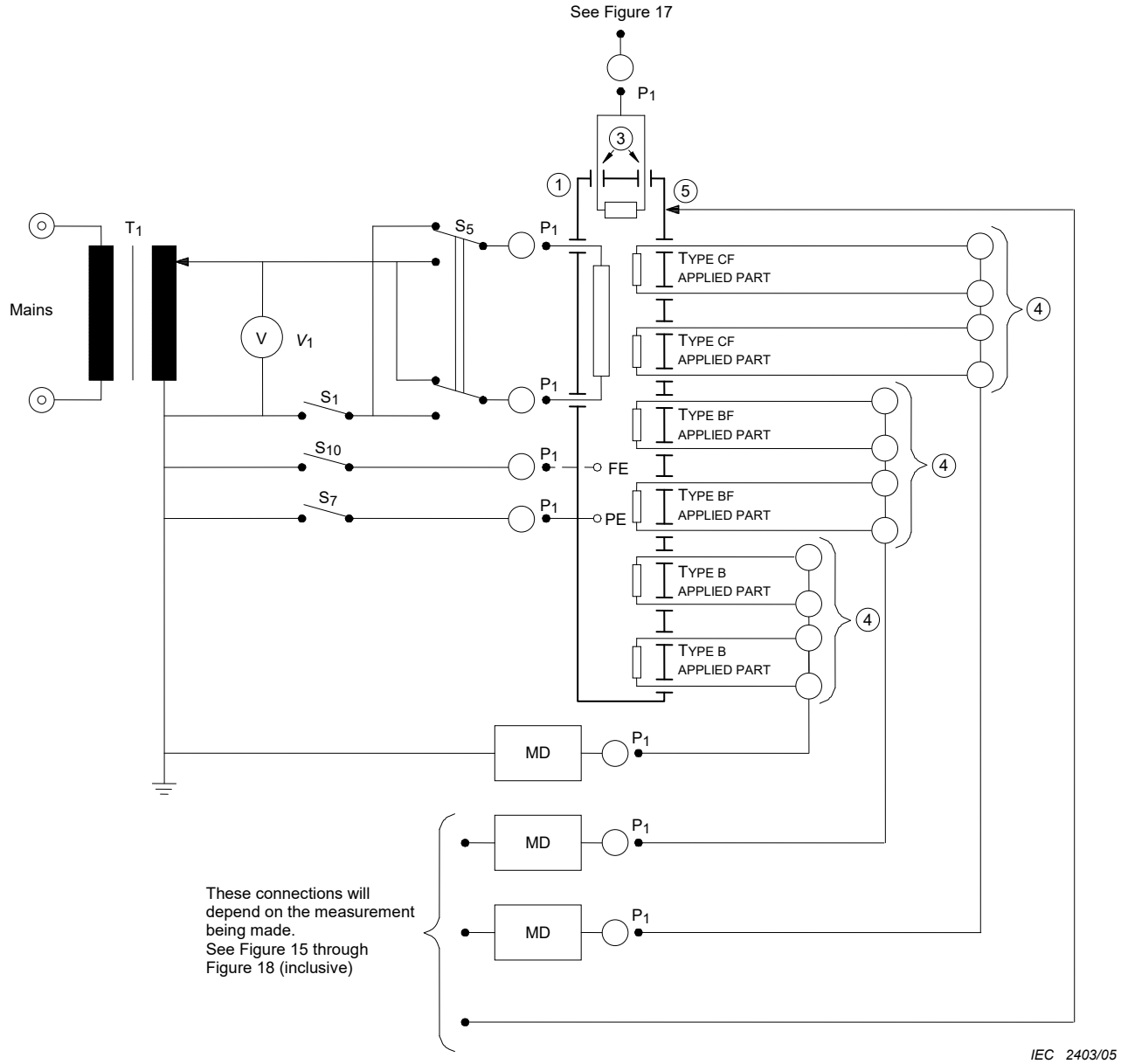

For legends, see Table 5.

Key

For the position of S_1, S_5, S_7 and S_{10}, see Figure 15, Figure 16, Figure 17 or Figure 18

Figure 20 – Measuring circuit for total PATIENT LEAKAGE CURRENT with all PATIENT CONNECTIONS of all APPLIED PARTS of the same type (TYPE B APPLIED PARTS, TYPE BF APPLIED PARTS or TYPE CF APPLIED PARTS) connected together
(see 8.7.4.7 h))

Copyright International Electrotechnical Commission
Provided by IHS Markit under license with IEC
No reproduction or networking permitted without license from IHS
Not for Resale, 08/26/2020 19:12:41 MDT

Table 5 – Legends of symbols for Figure 9 to Figure 11, Figure 13 to Figure 20, Figure A.15, Annexes E and F

(1)	ME EQUIPMENT ENCLOSURE
(2)	Separate power supply unit or other electrical equipment in an ME SYSTEM that supplies power to the ME EQUIPMENT (see 5.5 f) and Annex F)
(3)	SIGNAL INPUT/OUTPUT PART short circuited or loaded
(4)	PATIENT CONNECTIONS
(5)	Metal ACCESSIBLE PART not PROTECTIVELY EARTHED In case of a non-conductive ENCLOSURE and PATIENT LEAKAGE CURRENT measurement, connection is replaced by a metal foil of maximum 20 cm × 10 cm in intimate contact with the ENCLOSURE or relevant parts of the ENCLOSURE and connected to the reference earth
(6)	PATIENT circuit
(7)	Metal plate under a non-conductive ENCLOSURE with dimensions at least equal to the plan projection of the ENCLOSURE connected to the reference earth
T_1, T_2	Single- or polyphase isolation transformers with sufficient power rating and adjustable output voltage (See also the rationale for 8.7.4.2 and 8.7.4.3.)
$V_{(1,2,3)}$	Voltmeter indicating r.m.s. value, using, if relevant and possible, one meter with a commutator switch
S_1, S_2, S_3	Single-pole switches, simulating the interruption of a power supply conductor (SINGLE FAULT CONDITION) (See Annex F)
S_5, S_9	Commutator switches to reverse the polarity of the MAINS VOLTAGE
S_7	Single-pole switch, simulating the interruption of a single PROTECTIVE EARTH CONDUCTOR to the ME EQUIPMENT (SINGLE FAULT CONDITION)
S_8	Single pole switch simulating the interruption of a single PROTECTIVE EARTH CONDUCTOR to a separate power supply unit or other electrical equipment in an ME SYSTEM that supplies power to the ME EQUIPMENT (SINGLE FAULT CONDITION) (see Figure F.5)
S_{10}	Switch for connecting a FUNCTIONAL EARTH TERMINAL to the earthed point of the measuring supply system
S_{12}	Switch for connecting a PATIENT CONNECTION to the earthed point of the measuring supply circuit
S_{13}	Switch for connecting to earth a metal ACCESSIBLE PART not PROTECTIVELY EARTHED
S_{14}	Switch to connect/disconnect PATIENT CONNECTION to/from earth
S_{15}	Switch for connecting to earth a metal plate under a non-conductive ENCLOSURE
P_1	Sockets, plugs or terminals for the supply connection of the ME EQUIPMENT
P_2	Sockets, plugs or terminals for the connection to a separate power supply or other electrical equipment in an ME SYSTEM that supplies power to the ME EQUIPMENT (see Figure F.5)
MD	Measuring device (see Figure 12)
FE	FUNCTIONAL EARTH TERMINAL
PE	PROTECTIVE EARTH TERMINAL
R	Impedance to protect the circuitry and the person performing the test, but low enough to accept currents higher than the allowable values of the LEAKAGE CURRENT to be measured (optional)
- - - -	Optional connection
	Reference earth (for LEAKAGE CURRENT and PATIENT AUXILLARY CURRENT measurements and for testing of DEFIBRILLATION-PROOF APPLIED PARTS, not connected to protective earth of the SUPPLY MAINS)
	SUPPLY MAINS voltage source

Copyright International Electrotechnical Commission
Provided by IHS Markit under license with IEC
No reproduction or networking permitted without license from IHS
Not for Resale, 08/26/2020 19:12:41 MDT

8.7.4.2 * Measuring supply circuits

a) For ME EQUIPMENT specified for connection to a SUPPLY MAINS:

ME EQUIPMENT specified for connection to a SUPPLY MAINS is connected to an appropriate power source. For single-phase ME EQUIPMENT, the polarity of the supply is reversible and tests are conducted at both polarities.

NOTE 1 Figure F.1 to Figure F.5 (inclusive) show some suitable arrangements but do not cover all possibilities, for example, delta-connected 3-phase supplies. Refer to the IEC 60990 for additional types of arrangements.

b) For INTERNALLY POWERED ME EQUIPMENT:

INTERNALLY POWERED ME EQUIPMENT is tested without any connection to a measuring supply circuit.

NOTE 2 For INTERNALLY POWERED ME EQUIPMENT, Figure 14 to Figure 20 (inclusive) do not use the isolation transformers T_1 or switches S_1 and S_5. However, INTERNALLY POWERED ME EQUIPMENT that also has a means of connection to a SUPPLY MAINS shall also be tested according to a) above for that connection.

8.7.4.3 * Connection to the measuring supply circuit

a) *ME EQUIPMENT provided with a POWER SUPPLY CORD is tested using this cord.*

b) *ME EQUIPMENT provided with an APPLIANCE INLET is tested while connected to the measuring supply circuit via a DETACHABLE POWER SUPPLY CORD having a length of 3 m or a length and type specified in the instructions for use.*

c) *PERMANENTLY INSTALLED ME EQUIPMENT is tested while connected to the measuring supply circuit by the shortest possible connection.*

d) *Measuring arrangement*

1) *APPLIED PARTS, including PATIENT cables (when present), are placed on an insulating surface with a dielectric constant of approximately 1 (for example, expanded polystyrene) and approximately 200 mm above an earthed metal surface.*

NOTE 1 The measuring supply circuit and the measuring circuit should be positioned as far as possible away from unscreened power source leads. Placing the ME EQUIPMENT on or near a large earthed metal surface should be avoided.

NOTE 2 Where APPLIED PARTS are such that the test results can depend upon how they are placed on the insulating surface, the test is repeated as necessary to determine the worst possible positioning.

2) *If an isolating transformer is not used for LEAKAGE CURRENT measurements (e.g. when measuring LEAKAGE CURRENT for very high input power ME EQUIPMENT), the reference earth of the measuring circuits is connected to protective earth of the SUPPLY MAINS.*

8.7.4.4 Measuring device (MD)

a) *The measuring device loads the source of LEAKAGE CURRENT or PATIENT AUXILIARY CURRENT with a resistive impedance of approximately 1 000 Ω for d.c., a.c. and composite waveforms with frequencies up to and including 1 MHz.*

b) *The evaluation of current or current components according to 8.7.3 a) is obtained automatically if a measuring device according to Figure 12 a) or a similar circuit with the same frequency characteristic is used. This allows measurement of the total effect of all frequencies with a single instrument.*

If currents or current components with frequencies exceeding 1 kHz might exceed the 10 mA limit specified in 8.7.3 *e), these are measured by other appropriate means such as a 1 kΩ non-inductive resistor and suitable measuring instrument.*

Copyright International Electrotechnical Commission
Provided by IHS Markit under license with IEC
No reproduction or networking permitted without license from IHS Not for Resale, 08/26/2020 19:12:41 MDT

c) *The voltage measuring instrument as shown in Figure 12 a) has an input resistance of at least 1 MΩ and input capacitance of no more than 150 pF. It indicates the true r.m.s. value of the voltage being d.c., a.c. or a composite waveform having components with frequencies from 0,1 Hz up to and including 1 MHz, with an indicating error not exceeding ± 5 % of the indicated value.*

The scale can indicate the current through the measuring device including automatic evaluation of components with frequencies above 1 kHz so as to enable direct comparison of the reading with the limit values specified in 8.7.3.

These requirements can be limited to a frequency range with an upper limit lower than 1 MHz if it can be proven (for example, by the use of an oscilloscope) that frequencies above such an upper limit do not occur in the measured current.

8.7.4.5 * Measurement of the EARTH LEAKAGE CURRENT and current in functional earth connection

a) *CLASS I ME EQUIPMENT is tested according to Figure 13. CLASS II ME EQUIPMENT with a functional earth connection according to 8.6.9 is tested as if it were CLASS I ME EQUIPMENT.*

b) *If ME EQUIPMENT has more than one PROTECTIVE EARTH CONDUCTOR (for example, one connected to the main ENCLOSURE and one to a separate power supply unit), then the current to be measured is the aggregate current that would flow into the protective earthing system of the installation.*

c) *For FIXED ME EQUIPMENT that can have connections to earth through the building structure, the MANUFACTURER specifies a suitable test PROCEDURE and configuration for measurement of EARTH LEAKAGE CURRENT.*

8.7.4.6 * Measurement of the TOUCH CURRENT

a) *ME EQUIPMENT is tested according to Figure 14, using an appropriate measuring supply circuit.*

Measure with MD between earth and each part of the ENCLOSURE(S) that is not PROTECTIVELY EARTHED.

Measure with MD between parts of the ENCLOSURE(S) that are not PROTECTIVELY EARTHED.

In the SINGLE FAULT CONDITION of interruption of any one PROTECTIVE EARTH CONDUCTOR (when applicable, see 8.1 b)), measure with MD between earth and any part of the ENCLOSURE(S) that is normally PROTECTIVELY EARTHED.

NOTE It is not necessary to make separate measurements from more than one part that is PROTECTIVELY EARTHED.

INTERNALLY POWERED ME EQUIPMENT is investigated for TOUCH CURRENT but only between parts of the ENCLOSURE, not between the ENCLOSURE and earth unless 8.7.4.6 c) applies.

b) *If ME EQUIPMENT has an ENCLOSURE or a part of the ENCLOSURE made of insulating material, metal foil of maximum 20 cm x 10 cm is applied in intimate contact with the ENCLOSURE or relevant part of the ENCLOSURE.*

The metal foil is shifted, if possible, to determine the highest value of the TOUCH CURRENT. The metal foil should not touch any metal parts of the ENCLOSURE that are possibly PROTECTIVELY EARTHED; however, metal parts of the ENCLOSURE that are not PROTECTIVELY EARTHED can be covered partly or totally by the metal foil.

Where it is intended to measure the TOUCH CURRENT in the SINGLE FAULT CONDITION of interruption of a PROTECTIVE EARTH CONDUCTOR, the metal foil is arranged to contact parts of the ENCLOSURE that are normally PROTECTIVELY EARTHED.

--`,,```,,,,````-`-`,,`,,`,`,,`---

Copyright International Electrotechnical Commission
Provided by IHS Markit under license with IEC
No reproduction or networking permitted without license from IHS Not for Resale, 08/26/2020 19:12:41 MDT

Where the surface of the ENCLOSURE contacted by the PATIENT or OPERATOR is larger than 20 cm x 10 cm, the size of the foil is increased corresponding to the area of contact.

c) *ME EQUIPMENT with a SIGNAL INPUT/OUTPUT PART is, when required (see 8.1 a)), additionally tested using transformer T_2.*

The value of the voltage set at the transformer T_2 is equal to 110 % of the MAXIMUM MAINS VOLTAGE. The specific pin configuration used when applying the external voltage is determined to be worst case based on testing or circuit analysis.

8.7.4.7 Measurement of the PATIENT LEAKAGE CURRENT

See Annex K, which contains simplified PATIENT LEAKAGE CURRENT diagrams, for supplemental explanatory detail.

a) *ME EQUIPMENT with an APPLIED PART is tested according to Figure 15.*

An ENCLOSURE, other than an APPLIED PART, made of insulating material is placed in any position of NORMAL USE upon a flat metal surface connected to earth with dimensions at least equal to the plan-projection of the ENCLOSURE.

b) * *ME EQUIPMENT with an F-TYPE APPLIED PART is additionally tested according to Figure 16.*

SIGNAL INPUT/OUTPUT PARTS are connected to earth, if not already permanently earthed in the ME EQUIPMENT.

The value of the voltage to be set at the transformer T_2 in Figure 16 is equal to 110 % of the MAXIMUM MAINS VOLTAGE.

For this measurement, non-PROTECTIVELY EARTHED metal ACCESSIBLE PARTS including PATIENT CONECTIONS of other APPLIED PARTS (if present) are connected to earth.

c) * *ME EQUIPMENT with an APPLIED PART and a SIGNAL INPUT/OUTPUT PART is, when required (see 8.1 a)), additionally tested according to Figure 17.*

The value of the voltage set at the transformer T_2 is equal to 110 % of the MAXIMUM MAINS VOLTAGE. The specific pin configuration used when applying the external voltage is to be worst case based on testing or circuit analysis.

d) * *ME EQUIPMENT with a PATIENT CONNECTION of a TYPE B APPLIED PART that is not PROTECTIVELY EARTHED or a TYPE BF APPLIED PART and with metal ACCESSIBLE PARTS that are not PROTECTIVELY EARTHED is additionally tested according to Figure 18.*

The value of the voltage set at the transformer T_2 is equal to 110 % of the MAXIMUM MAINS VOLTAGE.

This test need not be conducted if it can be demonstrated that there is adequate separation of the parts involved or if the RISK is acceptably low according to 8.5.2.2.

e) *An APPLIED PART consisting of a surface made of insulating material is tested using metal foil as mentioned under 8.7.4.6. Alternatively a 0,9 % saline solution is used in which the APPLIED PART is immersed.*

Where the surface of the APPLIED PART intended to contact the PATIENT is considerably larger than that of a foil of 20 cm x 10 cm, the size of the foil is increased to correspond to the area of contact.

Such metal foil or saline solution is considered as the only PATIENT CONNECTION for the APPLIED PART concerned.

Copyright International Electrotechnical Commission
Provided by IHS Markit under license with IEC
No reproduction or networking permitted without license from IHS Not for Resale, 08/26/2020 19:12:41 MDT

f) *Where the PATIENT CONNECTION is formed by a fluid which contacts the PATIENT, the fluid is replaced by 0,9 % saline solution, an electrode is placed in the saline solution and this electrode is considered as the PATIENT CONNECTION for the APPLIED PART concerned.*

g) *The PATIENT LEAKAGE CURRENT is measured (see also Annex E):*

- *for TYPE B APPLIED PARTS, from all PATIENT CONNECTIONS connected directly together.*
- *for TYPE BF APPLIED PARTS, from and to all PATIENT CONNECTIONS of a single function either connected directly together or loaded as in NORMAL USE.*
- *for TYPE CF APPLIED PARTS, from and to every PATIENT CONNECTION in turn.*

If the instructions for use specifies alternatives for a detachable part of the APPLIED PART (for example, PATIENT leads or PATIENT cables and electrodes), the PATIENT LEAKAGE CURRENT measurements are made with the least favourable specified detachable part. See also 7.9.2.14.

h) * *The total PATIENT LEAKAGE CURRENT is measured from and to all PATIENT CONNECTIONS of all APPLIED PARTS of the same type (TYPE B APPLIED PARTS, TYPE BF APPLIED PARTS or TYPE CF APPLIED PARTS) connected together. See Figure 20. If necessary, a functional earth may be disconnected before conducting this test.*

NOTE Measurement of total PATIENT LEAKAGE CURRENT of TYPE B APPLIED PARTS is only necessary if there are two or more PATIENT CONNECTION that belong to different functions and that are not electrically connected directly together.

i) *If the PATIENT CONNECTIONS of the APPLIED PART are loaded in NORMAL USE, the measuring device is connected to each PATIENT CONNECTION in turn.*

8.7.4.8 Measurement of the PATIENT AUXILIARY CURRENT

ME EQUIPMENT with an APPLIED PART is tested according to Figure 19, using an appropriate measuring supply circuit unless the ME EQUIPMENT has only a single PATIENT CONNECTION.

The PATIENT AUXILIARY CURRENT is measured between any single PATIENT CONNECTION and all other PATIENT CONNECTIONS, either connected directly together or loaded as in NORMAL USE (see also Annex E).

8.7.4.9 * ME EQUIPMENT with multiple PATIENT CONNECTIONS

ME EQUIPMENT with multiple PATIENT CONNECTIONS is investigated to ensure that the PATIENT LEAKAGE CURRENT and the PATIENT AUXILIARY CURRENT do not exceed the allowable values for NORMAL CONDITION while one or more PATIENT CONNECTIONS are:

– disconnected from the PATIENT; and

– disconnected from the PATIENT and earthed.

Testing is performed if an examination of the ME EQUIPMENT circuit indicates that the PATIENT LEAKAGE CURRENT or the PATIENT AUXILIARY CURRENT can increase to excessive levels under the above conditions. Actual measurements should be limited to a representative number of combinations.

8.8 Insulation

8.8.1 * General

Only insulation that is relied upon as a MEANS OF PROTECTION, including REINFORCED INSULATION, shall be subject to testing.

Insulation forming part of a component is exempt provided that the component complies with 4.8.

Copyright International Electrotechnical Commission
Provided by IHS Markit under license with IEC
No reproduction or networking permitted without license from IHS Not for Resale, 08/26/2020 19:12:41 MDT

Insulation forming MEANS OF OPERATOR PROTECTION is exempt from the tests of 8.8 if it complies with the requirements and tests of IEC 60950-1:2005, IEC 60950-1:2005/AMD1:2009 and IEC 60950-1:2005/AMD2:2013 or IEC 62368-1 for INSULATION CO-ORDINATION.

8.8.2 * Distance through solid insulation or use of thin sheet material

Solid insulation which forms SUPPLEMENTARY INSULATION or REINFORCED INSULATION for a PEAK WORKING VOLTAGE greater than 71 V shall either:

a) have a distance through insulation of at least 0,4 mm, or

b) not form part of an ENCLOSURE and not be subject to handling or abrasion during NORMAL USE, and comprise:
   - at least two layers of material, each of which will pass the appropriate dielectric strength test; or
   - three layers of material, for which all combinations of two layers together will pass the appropriate dielectric strength test.

The appropriate dielectric strength test for the one or two layers is the test for one MEANS OF PROTECTION in the case of SUPPLEMENTARY INSULATION or the test for two MEANS OF PROTECTION in the case of REINFORCED INSULATION, respectively.

NOTE 1 There is no minimum thickness requirement for BASIC INSULATION, nor for insulation operating at WORKING VOLTAGE up to 71 V.

NOTE 2 There is no requirement for all layers of insulation to be of the same material.

Compliance is checked by inspection, by measurement of thickness and by the dielectric strength test of 8.8.3.

For wound components, where BASIC INSULATION, SUPPLEMENTARY INSULATION or REINFORCED INSULATION is required between windings, they shall be separated by interleaved insulation complying with a) or b) immediately above, or both, unless one of the following wire constructions is used:

c) wire that has solid insulation, other than solvent based enamel, complying with a) above;

d) wire that has multi-layer extruded or spirally wrapped insulation (where the layers can be individually tested for dielectric strength) complying with b) above and passes the tests of Annex L;

e) wire that has multi-layer extruded or spirally wrapped insulation (where only the finished wire can be tested) and passes the tests of Annex L. The minimum number of constructional layers applied to the conductor shall be as follows:
   - BASIC INSULATION: two wrapped layers or one extruded layer;
   - SUPPLEMENTARY INSULATION: two layers, wrapped or extruded;
   - REINFORCED INSULATION: three layers, wrapped or extruded.

In both d) and e), for spirally wrapped insulation where the CREEPAGE DISTANCES between layers, as wrapped, are less than those given in Table 12 or Table 16 (for Pollution Degree 1) depending on the type of insulation in question, the path between layers shall be sealed as for a cemented joint in 8.9.3.3 and the test voltages of the TYPE TESTS in L.3 are increased to 1,6 times their normal values.

NOTE 3 One layer of material wound with more than 50 % overlap is considered to constitute two layers.

Where two insulated wires or one bare and one insulated wire are in contact inside the wound component, crossing each other at an angle between 45° and 90° and subject to winding tension, protection against mechanical stress shall be provided. This protection can be

Copyright International Electrotechnical Commission
Provided by IHS Markit under license with IEC
No reproduction or networking permitted without license from IHS Not for Resale, 08/26/2020 19:12:41 MDT

achieved, for example, by providing physical separation in the form of insulating sleeving or sheet material, or by using double the required number of insulation layers.

The finished component shall pass routine tests for dielectric strength using the appropriate test voltages in 8.8.3.

Compliance is checked by inspection and measurement and, if applicable, as specified in Annex L. However, the tests of Annex L are not repeated if the material data sheets confirm compliance.

8.8.3 * Dielectric strength

The dielectric strength of solid electrical insulation of ME EQUIPMENT shall be capable of withstanding the test voltages as specified in Table 6. Only insulation with a safety function need be subject to testing (see 8.8.1).

Compliance is checked by applying the test voltage specified in Table 6 for 1 min:

– *immediately after the humidity preconditioning treatment (as described in 5.7) with the ME EQUIPMENT de-energized during the test, and*

– *after any required sterilization PROCEDURE (see 11.6.7, 7.9.2.12 and the instructions for use) with the ME EQUIPMENT de-energized, and*

– *after reaching a temperature equivalent to the steady state operating temperature reached during the heating test of 11.1.1.*

Initially, not more than half the test voltage is applied, and then it is gradually raised over a period of 10 s to the full value, which is maintained for 1 min, after which it is gradually lowered over a period of 10 s to less than half the full value.

The test conditions are as follows:

a) * *The test voltage has a waveform and frequency such that the dielectric stress on the insulation is at least equal to that occurring in NORMAL USE. The waveform and frequency of the test voltage can differ from the voltage applied in NORMAL USE if it can be demonstrated that the dielectric stress on the insulation tested will not be diminished.*

   Where the voltage to which the relevant insulation is subjected in NORMAL USE is non-sinusoidal a.c., the test may be performed using a sinusoidal 50 Hz or 60 Hz test voltage.

   Alternatively, a d.c. test voltage equal to the peak value of the a.c. test voltage may be used.

   The test voltage, for the WORKING VOLTAGE to which the insulation is subjected is greater than or equal to the value specified in Table 6.

b) *During the test, breakdown constitutes a failure. Insulation breakdown is considered to have occurred when the current which flows as a result of the application of the test voltage rapidly increases in an uncontrolled manner, that is, the insulation does not restrict the flow of the current. Corona discharge or a single momentary flashover is not regarded as insulation breakdown.*

c) *If it is not possible to test individual solid insulations, it is then necessary to test a large part of the ME EQUIPMENT or even the whole ME EQUIPMENT. In this case, it is important not to overstress different types and levels of insulation and the following must be taken into account.*

   – *Where an ENCLOSURE or part of ENCLOSURE consists of non-conductive surfaces, metal foil is applied. Care is taken that the metal foil is positioned in such a manner that flashover does not occur at the edges of insulation linings. If applicable, the metal foil is moved so as to test all parts of the surface.*

Copyright International Electrotechnical Commission
Provided by IHS Markit under license with IEC
No reproduction or networking permitted without license from IHS Not for Resale, 08/26/2020 19:12:41 MDT

– *The circuits on either side of the insulation under test should be connected or short circuited such that components within these circuits do not get stressed during the test. For example, the terminals of the* MAINS PART, *the* SIGNAL INPUT/OUTPUT PART *and the* PATIENT CONNECTION(S) *(if applicable) respectively are short circuited during the test.*

– *Where there are capacitors across the insulation under test (e.g. radio-frequency filter capacitors), they may be disconnected during the test, if they are certified to IEC 60384-14.*

Table 6 – Test voltages for solid insulation forming a MEANS OF PROTECTION

PEAK WORKING VOLTAGE (*U*) V peak	PEAK WORKING VOLTAGE (*U*) V d.c.	A.C. test voltages in V r.m.s.							
		MEANS OF OPERATOR PROTECTION				MEANS OF PATIENT PROTECTION			
		Protection from MAINS PART		Protection from SECONDARY CIRCUITS		Protection from MAINS PART		Protection from SECONDARY CIRCUITS	
		One MOOP	Two MOOP	One MOOP	Two MOOP	One MOPP	Two MOPP	One MOPP	Two MOPP
U < 42,4	*U* < *60*	1 000	2 000	No test	No test	1 500	3 000	500	1 000
42,4 < *U* ≤ 71	60 < *U* ≤ 71	1 000	2 000	See Table 7	See Table 7	1 500	3 000	750	1 500
71 < *U* ≤ 184	71 < *U* ≤ 184	1 000	2 000	See Table 7	See Table 7	1 500	3 000	1 000	2 000
184 < *U* ≤ 212	184 < *U* ≤ 212	1 500	3 000	See Table 7	See Table 7	1 500	3 000	1 000	2 000
212 < *U* ≤ 354	212 < *U* ≤ 354	1 500	3 000	See Table 7	See Table 7	1 500	4 000	1 500	3 000
354 < *U* ≤ 848	354 < *U* ≤ 848	See Table 7	3 000	See Table 7	See Table 7	$\sqrt{2}U$ + 1 000	2 x ($\sqrt{2}U$ + 1 500)	$\sqrt{2}U$ + 1 000	2 x ($\sqrt{2}U$ + 1 500)
848 < *U* ≤ 1 414	848 < *U* ≤ 1 414	See Table 7	3 000	See Table 7	See Table 7	$\sqrt{2}U$ + 1 000	2 x ($\sqrt{2}U$ + 1 500)	$\sqrt{2}U$ + 1 000	2 x ($\sqrt{2}U$ + 1 500)
1 414 < *U* ≤ 10 000	1 414 < *U* ≤ 10 000	See Table 7	See Table 7	See Table 7	See Table 7	$U/\sqrt{2}$ + 2 000	$\sqrt{2}U$ + 5 000	$U/\sqrt{2}$ + 2 000	$\sqrt{2}U$ + 5 000
10 000 < *U* ≤ 14 140	10 000 < *U* ≤ 14 140	1,06 x *U*	1,06 x *U*	1,06 x *U*	1,06 x *U*	$U/\sqrt{2}$ + 2 000	$\sqrt{2}U$ + 5 000	$U/\sqrt{2}$ + 2 000	$\sqrt{2}U$ + 5 000
U > 14 140	*U* > 14 140	If necessary, to be prescribed by particular standards							

NOTE 1 For a barrier according to:

– Figure J.6, use the column MEANS OF PATIENT PROTECTION – Protection from SECONDARY CIRCUITS – Two MOPP.

– 8.5.2.1 and Figure J.7, use the column MEANS OF PATIENT PROTECTION – Protection from MAINS PART – One MOPP.

NOTE 2 See the rationale for 8.8.3.

NOTE 3 Insulation meeting the requirements for the test voltage for reinforced insulation for a nominal mains system voltage up to and including 250 V r.m.s according to IEC 62368-1:2018, Table 27 meets the requirements for 1 MOPP according to this table for a peak WORKING VOLTAGE up to 1 293 V. At higher WORKING VOLTAGES the insulation does not necessarily provide 1 MOPP.

Insulation meeting the requirements for the test voltage for reinforced insulation for a nominal mains system voltage above 250 V r.m.s. up to and including 600 V r.m.s. according to IEC 62368-1:2018, Table 27 meets the requirements for 1 MOPP according to this table for a peak WORKING VOLTAGE up to 2 172 V. At higher WORKING VOLTAGES the insulation does not necessarily provide 1 MOPP.

Copyright International Electrotechnical Commission
Provided by IHS Markit under license with IEC
No reproduction or networking permitted without license from IHS
Not for Resale, 08/26/2020 19:12:41 MDT

Table 7 – Test voltages for MEANS OF OPERATOR PROTECTION

Test voltage in V r.m.s.

PEAK WORKING VOLTAGE (*U*) V peak or V d.c.	One MOOP	Two MOOP	PEAK WORKING VOLTAGE (*U*) V peak or V d.c.	One MOOP	Two MOOP	PEAK WORKING VOLTAGE (*U*) V peak or V d.c.	One MOOP	Two MOOP
34	500	800	250	1 261	2 018	1 750	3 257	3 257
35	507	811	260	1 285	2 055	1 800	3 320	3 320
36	513	821	270	1 307	2 092	1 900	3 444	3 444
38	526	842	280	1 330	2 127	2 000	3 566	3 566
40	539	863	290	1 351	2 162	2 100	3 685	3 685
42	551	882	300	1 373	2 196	2 200	3 803	3 803
44	564	902	310	1 394	2 230	2 300	3 920	3 920
46	575	920	320	1 414	2 263	2 400	4 034	4 034
48	587	939	330	1 435	2 296	2 500	4 147	4 147
50	598	957	340	1 455	2 328	2 600	4 259	4 259
52	609	974	350	1 474	2 359	2 700	4 369	4 369
54	620	991	360	1 494	2 390	2 800	4 478	4 478
56	630	1 008	380	1 532	2 451	2 900	4 586	4 586
58	641	1 025	400	1 569	2 510	3 000	4 693	4 693
60	651	1 041	420	1 605	2 567	3 100	4 798	4 798
62	661	1 057	440	1 640	2 623	3 200	4 902	4 902
64	670	1 073	460	1 674	2 678	3 300	5 006	5 006
66	680	1 088	480	1 707	2 731	3 400	5 108	5 108
68	690	1 103	500	1 740	2 784	3 500	5 209	5 209
70	699	1 118	520	1 772	2 835	3 600	5 309	5 309
72	708	1 133	540	1 803	2 885	3 800	5 507	5 507
74	717	1 147	560	1 834	2 934	4 000	5 702	5 702
76	726	1 162	580	1 864	2 982	4 200	5 894	5 894
78	735	1 176	588	1 875	3 000	4 400	6 082	6 082
80	744	1 190	600	1 893	3 000	4 600	6 268	6 268
85	765	1 224	620	1 922	3 000	4 800	6 452	6 452
90	785	1 257	640	1 951	3 000	5 000	6 633	6 633
95	805	1 288	660	1 979	3 000	5 200	6 811	6 811
100	825	1 319	680	2 006	3 000	5 400	6 987	6 987
105	844	1 350	700	2 034	3 000	5 600	7 162	7 162
110	862	1 379	720	2 060	3 000	5 800	7 334	7 334
115	880	1 408	740	2 087	3 000	6 000	7 504	7 504
120	897	1 436	760	2 113	3 000	6 200	7 673	7 673
125	915	1 463	780	2 138	3 000	6 400	7 840	7 840
130	931	1 490	800	2 164	3 000	6 600	8 005	8 005
135	948	1 517	850	2 225	3 000	6 800	8 168	8 168
140	964	1 542	900	2 285	3 000	7 000	8 330	8 330
145	980	1 568	950	2 343	3 000	7 200	8 491	8 491
150	995	1 593	1 000	2 399	3 000	7 400	8 650	8 650
152	1 000	1 600	1 050	2 454	3 000	7 600	8 807	8 807
155	1 000	1 617	1 100	2 508	3 000	7 800	8 964	8 964
160	1 000	1 641	1 150	2 560	3 000	8 000	9 119	9 119
165	1 000	1 664	1 200	2 611	3 000	8 200	9 273	9 273
170	1 000	1 688	1 250	2 661	3 000	8 400	9 425	9 425
175	1 000	1 711	1 300	2 710	3 000	8 600	9 577	9 577
180	1 000	1 733	1 350	2 758	3 000	8 800	9 727	9 727
184	1 000	1 751	1 400	2 805	3 000	9 000	9 876	9 876
185	1 097	1 755	1 410	2 814	3 000	9 200	10 024	10 024
190	1 111	1 777	1 450	2 868	3 000	9 400	10 171	10 171
200	1 137	1 820	1 500	2 934	3 000	9 600	10 317	10 317
210	1 163	1 861	1 550	3 000	3 000	9 800	10 463	10 463
220	1 189	1 902	1 600	3 065	3 065	10 000	10 607	10 607
230	1 214	1 942	1 650	3 130	3 130			
240	1 238	1 980	1 700	3 194	3 194			

Copyright International Electrotechnical Commission
Provided by IHS Markit under license with IEC
No reproduction or networking permitted without license from IHS
Not for Resale, 08/26/2020 19:12:41 MDT

8.8.4 Insulation other than wire insulation

8.8.4.1 * Mechanical strength and resistance to heat

The resistance to heat shall be retained by all types of insulation, including insulating partition walls, during the EXPECTED SERVICE LIFE of the ME EQUIPMENT.

Compliance is checked by inspection of the ME EQUIPMENT and the design documentation, and, if necessary, inspection of the RISK MANAGEMENT FILE in conjunction with the following tests:

– *resistance to moisture, etc. (see 11.6);*

– *dielectric strength (see 8.8.3);*

– *mechanical strength (see 15.3).*

Resistance to heat is established by the following tests, which need not be performed if satisfactory evidence of compliance is provided.

a) *For parts of the ENCLOSURE and other external insulating parts, the deterioration of which could result in an unacceptable RISK, by the ball-pressure test:*

ENCLOSURES and other external parts of insulating material, except the insulation of flexible cords and parts of ceramic material, are subjected to a ball-pressure test using the test apparatus shown in Figure 21. The surface of the part to be tested is placed in the horizontal position and a steel ball of 5 mm diameter is pressed against the surface with a force of 20 N. The test is performed in a heating cabinet at a temperature of 75 °C ± 2 °C or the ambient temperature indicated in the technical description (see 7.9.3.1) ± 2 °C plus the temperature rise of the relevant part of insulating material measured during the test of 11.1, whichever is the higher.

The ball is withdrawn after 1 h and the diameter of the impression made by the ball is measured. An impression greater than 2 mm in diameter constitutes a failure.

b) *For parts of insulating material that support uninsulated parts of the MAINS PART, the deterioration of which could influence the safety of the ME EQUIPMENT, by the ball-pressure test:*

A test is performed as described in a) above, but at a temperature of 125 °C ± 2 °C or at the ambient temperature indicated in the technical description (see 7.9.3.1) ± 2 °C plus the temperature rise that was determined during the test of 11.1 of the relevant part, whichever is the higher.

The test is not performed on parts of ceramic material, insulating parts of commutators, brush-caps and the like, and on coil formers not used as REINFORCED INSULATION.

NOTE For SUPPLEMENTARY INSULATION and REINFORCED INSULATION of thermoplastic materials, see also 13.1.2.

8.8.4.2 Resistance to environmental stress

The insulating characteristics and mechanical strength of any MEANS OF PROTECTION shall be so designed or protected that it is not likely to be impaired by environmental stresses including deposition of dirt or by dust resulting from wear of parts within the ME EQUIPMENT to such an extent that CREEPAGE DISTANCES and AIR CLEARANCES are reduced below the values specified in 8.9.

Ceramic material not tightly sintered, and the like, and beads alone shall not be used as SUPPLEMENTARY INSULATION or REINFORCED INSULATION.

Insulating material in which heating conductors are embedded may be considered as one MEANS OF PROTECTION but shall not be used as two MEANS OF PROTECTION.

Copyright International Electrotechnical Commission
Provided by IHS Markit under license with IEC
No reproduction or networking permitted without license from IHS Not for Resale, 08/26/2020 19:12:41 MDT

Compliance is checked by inspection, by measurement and for natural latex rubber by the following test:

Parts of natural latex rubber are aged in an atmosphere of oxygen under pressure. The samples are suspended freely in an oxygen cylinder, the effective capacity of the cylinder is at least 10 times the volume of the samples. The cylinder is filled with commercial oxygen not less than 97 % pure, to a pressure of 2,1 MPa ± 70 kPa.

The samples are kept in the cylinder at a temperature of 70 °C ± 2 °C for 96 h. Immediately afterwards, they are taken out of the cylinder and left at room temperature for at least 16 h. After the test, the samples are examined. Cracks visible to the naked eye constitute a failure.

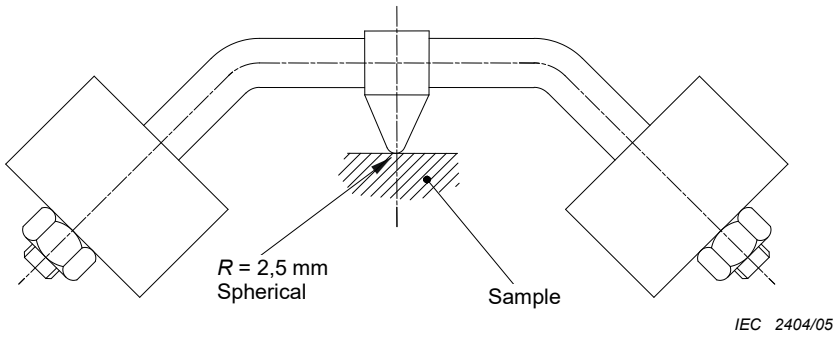

Figure 21 – Ball-pressure test apparatus
(see 8.8.4.1)

8.9 * CREEPAGE DISTANCES and AIR CLEARANCES

8.9.1 * Values

8.9.1.1 General

CREEPAGE DISTANCES and AIR CLEARANCES of ME EQUIPMENT shall be equal to or greater than the values of:

– for insulation between parts of opposite polarity of the MAINS PART on the SUPPLY MAINS side of any mains fuse or OVER-CURRENT RELEASE, one MEANS OF OPERATOR PROTECTION in accordance with Table 13, Table 14 and Table 16; and

– for insulation providing at least a MEANS OF PROTECTION, in accordance with Table 12 to Table 16 (inclusive) except as specified in 8.9.1.2 to 8.9.1.15. See also 8.9.2 to 8.9.4.

8.9.1.2 * CREEPAGE DISTANCES and AIR CLEARANCES complying with IEC 60950-1 or IEC 62368-1

Except as noted below, the values of Table 12 to Table 16 (inclusive) do not apply to CREEPAGE DISTANCES and AIR CLEARANCES forming MEANS OF OPERATOR PROTECTION that comply with the requirements of IEC 60950-1:2005, IEC 60950-1:2005/AMD1:2009 and IEC 60950-1:2005/AMD2:2013 or IEC 62368-1:2018 for INSULATION CO-ORDINATION and are used in the conditions (e.g. overvoltage category, pollution degree) under which compliance was tested.

Equipment/sub-assemblies/components complying with IEC 62368-1:2018 designed specifically for use with transient-free supply mains shall additionally comply with the applicable requirements of Table 13 to Table 16 (inclusive).

Copyright International Electrotechnical Commission
Provided by IHS Markit under license with IEC
No reproduction or networking permitted without license from IHS Not for Resale, 08/26/2020 19:12:41 MDT

8.9.1.3 CREEPAGE DISTANCES across glass, mica, ceramic and similar materials

For CREEPAGE DISTANCES across glass, mica, ceramic and other inorganic insulating materials with similar tracking characteristics, the specified minimum value of AIR CLEARANCE shall be applied as the minimum CREEPAGE DISTANCE.

8.9.1.4 Minimum CREEPAGE DISTANCE

If the minimum CREEPAGE DISTANCE derived from Table 12 to Table 16 (inclusive) is less than the applicable minimum AIR CLEARANCE, that value of minimum AIR CLEARANCE shall be applied as the minimum CREEPAGE DISTANCE.

8.9.1.5 ME EQUIPMENT RATED for high altitudes

Unless otherwise declared by the MANUFACTURER, ME EQUIPMENT is RATED to operate at an altitude ≤ 2 000 m. Where ME EQUIPMENT is intended to be operated in a pressurized environment, e.g. aircraft, the operating altitude corresponding to the air pressure concerned shall be used in determining multiplication factor from Table 8. The AIR CLEARANCE is then multiplied by this factor. CREEPAGE DISTANCES are not subject to the multiplication factors but shall always be at least as large as the resulting value for AIR CLEARANCE.

Table 8 – Multiplication factors for AIR CLEARANCES for altitudes up to 5 000 m

RATED operating altitude (*a*) m	Normal barometric pressure kPa	Multiplication factor for MOOP	Multiplication factor for MOPP
$a \leq 2\,000$	80,0	1,00	1,00
$2\,000 < a \leq 3\,000$	70,0	1,14	1,00
$3\,000 < a \leq 4\,000$	62,0	1,29	1,14
$4\,000 < a \leq 5\,000$	54,0	1,48	1,29

NOTE 1 The multiplication factors for MEANS OF OPERATOR PROTECTION relate to IEC 60950-1:2005 and IEC 62368-1:2018, which specifies AIR CLEARNACES for altitudes up to 2 000 m.

NOTE 2 The multiplication factors for MEANS OF PATIENT PROTECTION relate to the second edition of IEC 60601-1, which specified spacing AIR CLEARANCES for altitudes up to 3 000 m.

NOTE 3 The multiplication factors for MOOPs (column 3) are derived from IEC 60664-1:2007.

8.9.1.6 * Interpolation

If the WORKING VOLTAGE has a value between those given in Table 12 to Table 16 (inclusive):

– for determining CREEPAGE DISTANCES, linear interpolation is permitted between the nearest two values, the calculated spacing being rounded to the next higher 0,1 mm increment;

– for determining AIR CLEARANCES for PEAK WORKING VOLTAGES above 2 800 V peak or d.c., linear interpolation is permitted between the nearest two values, the calculated spacing being rounded to the next higher 0,1 mm increment;

– for determining AIR CLEARANCES for PEAK WORKING VOLTAGE up to 2 800 V peak or d.c., the higher of the two values shall be applied.

8.9.1.7 Material groups classification

Material groups are classified as shown in Table 9.

Copyright International Electrotechnical Commission
Provided by IHS Markit under license with IEC
No reproduction or networking permitted without license from IHS
Not for Resale, 08/26/2020 19:12:41 MDT

Table 9 – Material group classification

Material group	Comparative tracking index (CTI)
I	600 ≤ CTI
II	400 ≤ CTI < 600
IIIa	175 ≤ CTI < 400
IIIb	100 ≤ CTI < 175

The material group is verified by evaluation of the test data for the material according to IEC 60112 using 50 drops of solution A.

If the material group is not known, material group IIIb shall be assumed.

8.9.1.8 Pollution degree classification

Pollution degrees are classified as follows:

– Pollution degree 1 is used to describe a micro-environment that is sealed so as to exclude dust and moisture.

  NOTE 1 An example of such a micro-environment is a sealed or potted component or assembly.

– Pollution degree 2 is used to describe a micro-environment where only non-conductive pollution occurs except that occasionally a temporary conductivity caused by condensation is to be expected.

– Pollution degree 3 is used to describe a micro-environment that is subject to conductive pollution, or to dry non-conductive pollution that could become conductive due to expected condensation.

– Pollution degree 4 is used to describe a micro-environment where continuous conductivity occurs due to conductive dust, rain or other wet conditions.

  NOTE 2 This type of environment can occur inside commutating motors which generate carbon dust from the brushes.

Pollution degree 4 is not acceptable for insulation providing a MEANS OF PROTECTION. However, in the case where insulation between the MAINS PART and earth might be compromised, it is necessary to provide measures, such as planned maintenance, to ensure that the micro-environment is mitigated to a lower pollution degree.

Annex M specifies measures that may be used to reduce the pollution degree.

8.9.1.9 Overvoltage category classification

The applicable value of the MAINS TRANSIENT VOLTAGE shall be determined from the overvoltage category according to IEC 60664-1 and the NOMINAL a.c. MAINS VOLTAGE using Table 10.

8.9.1.10 AIR CLEARANCE for MAINS PARTS

For MAINS PARTS operating on RATED MAINS VOLTAGES up to 300 V, the required AIR CLEARANCE shall be the value in Table 13 for the r.m.s. or d.c. RATED MAINS VOLTAGE plus the additional AIR CLEARANCE in Table 14 for the PEAK WORKING VOLTAGE.

8.9.1.11 SUPPLY MAINS overvoltage

This standard relates to overvoltage category II according to IEC 60664-1. If ME EQUIPMENT is intended to be used in locations where the SUPPLY MAINS is overvoltage category III, the values specified in Table 13 to Table 15 (inclusive) will be inadequate for clearance. Therefore the values given in the next MAINS TRANSIENT VOLTAGE column upwards shall be used. Whilst it is not envisaged that PATIENT protection (Table 12) will be required for use of ME EQUIPMENT on overvoltage category III SUPPLY MAINS, should this be necessary, guidance is given on the values required in the rationale for Subclause 8.9.

Copyright International Electrotechnical Commission
Provided by IHS Markit under license with IEC
No reproduction or networking permitted without license from IHS
Not for Resale, 08/26/2020 19:12:41 MDT

Table 10 – MAINS TRANSIENT VOLTAGE

NOMINAL a.c. SUPPLY MAINS voltage line-to-neutral up to and including V r.m.s.	MAINS TRANSIENT VOLTAGE V peak			
	Overvoltage Category			
	I	II	III	IV
50	330	500	800	1 500
100	500	800	1 500	2 500
150 [a]	800	1 500	2 500	4 000
300 [b]	1 500	2 500	4 000	6 000
600 [c]	2 500	4 000	6 000	8 000
NOTE 1 In Norway, due to the IT power distribution system used, the a.c SUPPLY MAINS voltage is considered to be equal to the line-to-line voltage, and will remain 230 V in case of a single earth fault.				
NOTE 2 In Japan, the value of the MAINS TRANSIENT VOLTAGES for the NOMINAL a.c. SUPPLY MAINS voltage of 100 V is determined from columns applicable to the NOMINAL a.c. SUPPLY MAINS voltage of 150 V.				
[a] Including 120/208 or 120/240 V.				
[b] Including 230/400 or 277/480 V.				
[c] Including 400/690 V.				

8.9.1.12 SECONDARY CIRCUITS

A SECONDARY CIRCUIT derived from a SUPPLY MAINS will normally be overvoltage category I according to IEC 60664-1 if the MAINS PART is overvoltage category II; the maximum transients for various SUPPLY MAINS voltages in overvoltage category I are shown in the column headings of Table 15.

Where the SECONDARY CIRCUIT is earthed or the ME EQUIPMENT is INTERNALLY POWERED, Table 15 applies.

Where a SECONDARY CIRCUIT is not earthed and is derived from a SUPPLY MAINS, the circuit shall be subjected to the requirements for primary circuits in Table 13 and Table 14.

If the SECONDARY CIRCUIT is separated from the MAINS PART by a functionally earthed or PROTECTIVELY EARTHED metal screen or transients in the SECONDARY CIRCUIT are below the levels expected for overvoltage category I, (for example due to being attenuated by connecting a component, such as a capacitor, between the SECONDARY CIRCUIT and earth), the values in Table 15 apply.

The column for circuits not subject to transient overvoltages applies to:

– d.c. SECONDARY CIRCUITS that are reliably connected to earth and have capacitive filtering which limits the peak-to-peak ripple to 10 % of the d.c. voltage;

– circuits in INTERNALLY POWERED ME EQUIPMENT; or

– the MEANS OF PROTECTION required by 15.4.3.5 and 15.5.1.1.

8.9.1.13 PEAK WORKING VOLTAGES above 1 400 V peak or d.c.

The values in Table 15 for PEAK WORKING VOLTAGES above 1 400 V peak or d.c. do not apply if all the following conditions are satisfied:

– the AIR CLEARANCE is at least 5 mm;

Copyright International Electrotechnical Commission
Provided by IHS Markit under license with IEC
No reproduction or networking permitted without license from IHS
Not for Resale, 08/26/2020 19:12:41 MDT

– the insulation involved passes a dielectric strength test according to 8.8.3 using:
  - an a.c. test voltage whose r.m.s. value is equal to 1,06 times the PEAK WORKING VOLTAGE or
  - a d.c. test voltage equal to the peak value of the a.c. test voltage prescribed above;

  and

– the AIR CLEARANCE path is partly or entirely through air or along the surface of an insulating material of material group I.

If the AIR CLEARANCE path is also partly along the surface of a material that is not material group I, the dielectric strength test is conducted only across the part(s) of the path that are through air.

8.9.1.14 Minimum CREEPAGE DISTANCES for two MEANS OF OPERATOR PROTECTION

Minimum CREEPAGE DISTANCES for two MEANS OF OPERATOR PROTECTION are obtained by doubling the values shown in Table 16 for one MEANS OF OPERATOR PROTECTION.

8.9.1.15 * CREEPAGE DISTANCES and AIR CLEARANCES for DEFIBRILLATION-PROOF APPLIED PARTS

CREEPAGE DISTANCES and AIR CLEARANCES needed to satisfy 8.5.5.1 for DEFIBRILLATION-PROOF APPLIED PARTS shall not be less than 4 mm.

Table 11 – Not used

Copyright International Electrotechnical Commission
Provided by IHS Markit under license with IEC
No reproduction or networking permitted without license from IHS Not for Resale, 08/26/2020 19:12:41 MDT

Table 12 – Minimum CREEPAGE DISTANCES and AIR CLEARANCES providing MEANS OF PATIENT PROTECTION

WORKING VOLTAGE V d.c. up to and including	WORKING VOLTAGE V r.m.s. up to and including	Spacing providing one MEANS OF PATIENT PROTECTION		Spacing providing two MEANS OF PATIENT PROTECTION	
		CREEPAGE DISTANCE mm	AIR CLEARANCE mm	CREEPAGE DISTANCE mm	AIR CLEARANCE mm
17	12	1,7	0,8	3,4	1,6
43	30	2	1	4	2
85	60	2,3	1,2	4,6	2,4
177	125	3	1,6	6	3,2
354	250	4	2,5	8	5
566	400	6	3,5	12	7
707	500	8	4,5	16	9
934	660	10,5	6	21	12
1 061	750	12	6,5	24	13
1 414	1 000	16	9	32	18
1 768	1 250	20	11,4	40	22,8
2 263	1 600	25	14,3	50	28,6
2 828	2 000	32	18,3	64	36,6
3 535	2 500	40	22,9	80	45,8
4 525	3 200	50	28,6	100	57,2
5 656	4 000	63	36,0	126	72,0
7 070	5 000	80	45,7	160	91,4
8 909	6 300	100	57,1	200	114,2
11 312	8 000	125	71,4	250	142,8
14 140	10 000	160	91,4	320	182,8

NOTE 1 For MOPP, the values of CREEPAGE DISTANCE and AIR CLEARANCE are based on values in the second edition of IEC 60601-1 [74] and are applied regardless of pollution degree, over-voltage category and material group.

NOTE 2 The CREEPAGE DISTANCE and AIR CLEARANCE in this table are both related to r.m.s. or d.c. WORKING VOLTAGES.

NOTE 3 It is recognised that the values in this table do not take into account waveforms with low r.m.s. and high PEAK WORKING VOLTAGES. For the specific case of switch mode power supply units employing MOPP, use the measured r.m.s. as the WORKING VOLTAGE.

NOTE 4 Barriers providing 2 MOOP according to Tables 13 to Table 15 (inclusive) or according to IEC 60950-1:2005, IEC 60950-1:2005/AMD1:2009 and IEC 60950-1:2005/AMD2:2013 meet the requirements for 1 MOPP according to this table for WORKING VOLTAGES up to and including 707 V d.c. / 500 V r.m.s. At higher WORKING VOLTAGES, 2 MOOP does not necessarily provide 1 MOPP.

Barriers providing REINFORCED INSULATION (2 MOOP) according to IEC 62368-1:2018 meet the requirements for 1 MOPP for WORKING VOLTAGES up to and including 354 V d.c. / 250 V r.m.s. according to this table. At higher WORKING VOLTAGES, REINFORCED INSULATION (2 MOOP) does not necessarily provide 1 MOPP.

Copyright International Electrotechnical Commission
Provided by IHS Markit under license with IEC
No reproduction or networking permitted without license from IHS
Not for Resale, 08/26/2020 19:12:41 MDT

Table 13 – Minimum AIR CLEARANCES providing MEANS OF OPERATOR PROTECTION from the MAINS PART

AIR CLEARANCE in mm

WORKING VOLTAGE up to and including		NOMINAL MAINS VOLTAGE ≤ 150 V (MAINS TRANSIENT VOLTAGE 1 500 V)				150 V < NOMINAL MAINS VOLTAGE ≤ 300 V (MAINS TRANSIENT VOLTAGE 2 500 V)		300 V < NOMINAL MAINS VOLTAGE ≤ 600 V (MAINS TRANSIENT VOLTAGE 4 000V)	
Voltage peak or d.c.	Voltage r.m.s (sinusoidal)	Pollution degrees 1 and 2		Pollution degree 3		Pollution degrees 1, 2 and 3		Pollution degrees 1, 2 and 3	
V	V	One MOOP	Two MOOP	One MOOP	Two MOOP	One MOOP	Two MOOP	One MOOP	Two MOOP
210	150	1,0	2,0	1,3	2,6	2,0	4,0	3,2	6,4
420	300	1 MOOP 2,0 2 MOOP 4,0						3,2	6,4
840	600	1 MOOP 3,2 2 MOOP 6,4							
1 400	1 000	1 MOOP 4,2 2 MOOP 6,4							
2 800	2 000	1 or 2 MOOP 8,4							
7 000	5 000	1 or 2 MOOP 17,5							
9 800	7 000	1 or 2 MOOP 25							
14 000	10 000	1 or 2 MOOP 37							
28 000	20 000	1 or 2 MOOP 80							
AIR CLEARANCES for WORKING VOLTAGES above 20 kV r.m.s. or 28 kV d.c. can be prescribed by particular standards if necessary.									
NOTE AIR CLEARNACES are a function of peak voltage in the circuit. The r.m.s. voltage column is provided for the special case where the voltage has a sinusoidal waveform.									

Copyright International Electrotechnical Commission
Provided by IHS Markit under license with IEC
No reproduction or networking permitted without license from IHS
Not for Resale, 08/26/2020 19:12:41 MDT

Table 14 – Additional AIR CLEARANCES for insulation in MAINS PARTS with PEAK WORKING VOLTAGES exceeding the peak value of the NOMINAL MAINS VOLTAGE [a]
(see 8.9.1.10)

NOMINAL MAINS VOLTAGE ≤ 150 V r.m.s. or 210 V d.c.		150 V r.m.s. or 210 V dc < NOMINAL MAINS VOLTAGE ≤ 300 V r.m.s. or 420 V d.c.	Additional AIR CLEARANCE mm	
Pollution degrees 1 and 2	Pollution degree 3	Pollution degrees 1, 2 and 3		
PEAK WORKING VOLTAGE V	PEAK WORKING VOLTAGE V	PEAK WORKING VOLTAGE V	One MOOP	TWO MOOP
210	210	420	0	0
298	294	493	0,1	0,2
386	379	567	0,2	0,4
474	463	640	0,3	0,6
562	547	713	0,4	0,8
650	632	787	0,5	1,0
738	715	860	0,6	1,2
826	800	933	0,7	1,4
914		1 006	0,8	1,6
1 002		1 080	0,9	1,8
1 090		1 153	1,0	2,0
		1 226	1,1	2,2
		1 300	1,2	2,4

[a] When using this table, select the appropriate column for the RATED MAINS VOLTAGE and pollution degree and choose the row in that column which covers the actual PEAK WORKING VOLTAGE. Read the additional AIR CLEARANCE required from the relevant right hand column (for one or two MEANS OF OPERATOR PROTECTION and add this to the minimum AIR CLEARANCE from Table 13 to give the total minimum AIR CLEARANCE.

NOTE For voltage values above the PEAK WORKING VOLTAGE values given in the table, linear extrapolation is permitted.

--`,```,,,,,,,,,,```-`-`,,`,,`,`,,`---

Copyright International Electrotechnical Commission
Provided by IHS Markit under license with IEC
No reproduction or networking permitted without license from IHS
Not for Resale, 08/26/2020 19:12:41 MDT

Table 15 – Minimum AIR CLEARANCES for MEANS OF OPERATOR PROTECTION in SECONDARY CIRCUITS
(see 8.9.1.12)

AIR CLEARANCES in mm

WORKING VOLTAGE up to and including		Transient value for SECONDARY CIRCUIT ≤ 800 V (NOMINAL MAINS VOLTAGE ≤ 150 V)				Transient value for SECONDARY CIRCUIT ≤ 1 500 V (150 V < NOMINAL MAINS VOLTAGE ≤ 300 V)				Transient value for SECONDARY CIRCUIT ≤ 2 500 V (300 V < NOMINAL MAINS VOLTAGE ≤600 V)		Circuit not subject to transient overvoltages	
Voltage V peak or V d.c.	Voltage V r.m.s. (sinu-soidal)	Pollution degrees 1 and 2		Pollution degree 3		Pollution degrees 1 and 2		Pollution degree 3		Pollution degrees 1, 2 and 3		Pollution degrees 1 and 2 only	
		One MOOP	Two MOOP	One MOOP	Two MOOP	One MOOP	Two MOOP	One MOOP	Two MOOP	One MOOP	Two MOOP	One MOOP	Two MOOP
71	50	0,7	1,4	1,3	2,6	1,0	2,0	1,3	2,6	2,0	4,0	0,4	0,8
140	100	0,7	1,4	1,3	2,6	1,0	2,0	1,3	2,6	2,0	4,0	0,7	1,4
210	150	0,9	1,8	1,3	2,6	1,0	2,0	1,3	2,6	2,0	4,0	0,7	1,4
280	200	One MOOP 1,4; two MOOP 2,8								2,0	4,0	1,1	2,2
420	300	One MOOP 1,9; two MOOP 3,8								2,0	4,0	1,4	2,8
700	500	One MOOP 2,5; two MOOP 5,0											
840	600	One MOOP 3,2; two MOOP 5,0											
1 400	1 000	One MOOP 4,2; two MOOP 5,0											
2 800	2 000	One or two MOOP 8,4, but see 8.9.1.13											
7 000	5 000	One or two MOOP 17,5, but see 8.9.1.13											
9 800	7 000	One or two MOOP 25, but see 8.9.1.13											
14 000	10 000	One or two MOOP 37, but see 8.9.1.13											
28 000	20 000	One or two MOOP 80, but see 8.9.1.13											
42 000	30 000	One or two MOOP 130, but see 8.9.1.13											

NOTE AIR CLEARNACES are a function of peak voltage in the circuit. The r.m.s voltage column is provided for the special case where the voltage has a sinusoidal waveform.

--`,,`,,`-`-`,,`,,`,`,,`---
Copyright International Electrotechnical Commission
Provided by IHS Markit under license with IEC
No reproduction or networking permitted without license from IHS
Not for Resale, 08/26/2020 19:12:41 MDT

Table 16 – Minimum CREEPAGE DISTANCES providing MEANS OF OPERATOR PROTECTION [a]

CREEPAGE DISTANCE in mm

WORKING VOLTAGE V r.m.s or d.c.	Spacing for one MEANS OF OPERATOR PROTECTION						
	Pollution degree 1	Pollution degree 2			Pollution degree 3		
	Material group	Material group			Material group		
	I, II, IIIa, IIIb	I	II	IIIa or IIIb	I	II	IIIa or IIIb
25	Use the AIR CLEARANCE from the appropriate table	0,5	0.5	0,5	1,3	1,3	1,3
50		0,6	0,9	1,2	1,5	1,7	1,9
100		0,7	1,0	1,4	1,8	2,0	2,2
125		0,8	1,1	1,5	1,9	2,1	2,4
150		0,8	1,1	1,6	2,0	2,2	2,5
200		1,0	1,4	2,0	2,5	2,8	3,2
250		1,3	1,8	2,5	3,2	3,6	4,0
300		1,6	2,2	3,2	4,0	4,5	5,0
400		2,0	2,8	4,0	5,0	5,6	6,3
600		3,2	4,5	6,3	8,0	9,6	10,0
800		4.0	5,6	8,0	10,0	11,0	12,5
1 000		5,0	7,1	10,0	12,5	14,0	16,0

NOTE 1 Minimum CREEPAGE DISTANCES for two MEANS OF OPERATOR PROTECTION are obtained by doubling the values in this table.

NOTE 2 A CREEPAGE DISTANCE cannot be less than the required air clearance. See 8.9.1.4.

NOTE 3 For WORKING VOLTAGE values greater than 1 000 V, refer to Table A.2.

[a] CREEPAGE DISTANCES within this table apply to all situations.

8.9.1.16 Conductive surface coatings

When conductive coatings are applied to non-metallic surfaces, it shall be established that flaking or peeling does not result in the reduction of any AIR CLEARANCE or CREEPAGE DISTANCE.

Compliance is checked by examination of the construction and of the available data. If such data is not available, compliance is checked by application of an appropriate coating test standard.

NOTE Example of coating test standards include ISO 2409 [78], ISO 4624 [79] and UL 746C [82].

8.9.2 * Application

a) * For insulation in the MAINS PART between parts of opposite polarity, the minimum CREEPAGE DISTANCES and AIR CLEARANCES are not required if short circuiting of each single one of these CREEPAGE DISTANCES and AIR CLEARANCES in turn does not result in a HAZARDOUS SITUATION described in 13.1.

b) The contribution to the CREEPAGE DISTANCES of any groove or air gap less than the minimum spacing (X) shall be limited to its width (see Figure 23 to Figure 31 [inclusive]).

c) If AIR CLEARANCE provides a MEANS OF PROTECTION, the relative positioning shall be such that the relevant parts are rigid and located by moulding or the design shall be otherwise

Copyright International Electrotechnical Commission
Provided by IHS Markit under license with IEC
No reproduction or networking permitted without license from IHS Not for Resale, 08/26/2020 19:12:41 MDT

such that there is no reduction of a distance below the specified value by deformation or movement of the parts.

Where limited movement of one of the relevant parts is normal or likely, this shall be taken into account when computing the minimum AIR CLEARANCE.

8.9.3 * Spaces filled by insulating compound

8.9.3.1 General

Where distances between conductive parts are filled with insulating compound, including where insulation is reliably cemented together with insulating compound, so that AIR CLEARANCES and CREEPAGE DISTANCES do not exist, only the requirements for solid insulation apply.

NOTE Examples of such treatment include potting, encapsulation and vacuum impregnation, components or subassemblies that are treated with an insulating compound that fills voids; and internal insulation between adjacent tracks on one layer of a multi-layer printed board.

Compliance is checked by inspection, measurement and test of samples. Requirements for CREEPAGE DISTANCES and AIR CLEARANCES do not apply if samples pass the thermal cycling, humidity preconditioning and dielectric strength tests specified in either 8.9.3.2 and 8.9.3.4 or 8.9.3.3 and 8.9.3.4.

8.9.3.2 Insulating compound forming solid insulation between conductive parts

For situations where insulating compound forms solid insulation between conductive parts, a single finished sample is tested. The sample is subjected to the thermal cycling PROCEDURE as specified in 8.9.3.4, followed by humidity preconditioning according to 5.7 except for 48 hours only, followed by a dielectric strength test according to 8.8.3 except that the test voltage is multiplied by 1,6. The tests are followed by inspection, including sectioning, and measurement. Cracks or voids in the insulating compound such as would affect the homogeneity of the material constitute a failure.

8.9.3.3 Insulating compound forming a cemented joint with other insulating parts

For situations where insulating compound forms a cemented joint with other insulating parts, the reliability of the joint is checked by testing three samples. If a winding of solvent-based enamelled wire is used, it is replaced for the test by a metal foil or by a few turns of bare wire, placed close to the cemented joint. The three samples are then tested as follows.

– *One of the samples is subjected to the thermal cycling PROCEDURE as specified in 8.9.3.4. Immediately after the last period at highest temperature during thermal cycling it is subjected to a dielectric strength test according to 8.8.3 except that the test voltage is multiplied by 1,6*;

– *The other two samples are subjected to humidity preconditioning according to 5.7 except for 48 hours only, followed by a dielectric strength test according to 8.8.3 except that the test voltage is multiplied by 1,6.*

8.9.3.4 Thermal cycling

The sample is subjected 10 times to the following sequence of temperature cycles:

68 h at T_1 ± 2 °C;

1 h at 25 °C ± 2 °C;

2 h at 0 °C ± 2 °C;

not less than 1 h at 25 °C ± 2 °C,

where T_1 is the higher of

– *10 °C above the maximum temperature of the relevant part as determined according to 11.1.1; or*

– *85 °C.*

Copyright International Electrotechnical Commission
Provided by IHS Markit under license with IEC
No reproduction or networking permitted without license from IHS Not for Resale, 08/26/2020 19:12:41 MDT

However, the 10 °C margin is not added if the temperature is measured by an embedded thermocouple.

The period of time taken for the transition from one temperature to another is not specified, but the transition is permitted to be gradual.

8.9.4 * Measurement of CREEPAGE DISTANCES AND AIR CLEARANCES

Compliance is checked by measurement taking into account the rules in Figure 22 to Figure 31 *(inclusive). In each figure, the dashed line (— — —) represents* AIR CLEARANCE *and the shaded bar (▒▒▒▒▒▒▒▒▒▒▒▒▒▒▒▒)represents* CREEPAGE DISTANCE.

The minimum spacing (X) for grooves transverse to the CREEPAGE DISTANCE in Figure 23 to Figure 25 and Figure 27 to Figure 31 (inclusive) that are considered a MEANS OF OPERATOR PROTECTION may be adjusted based on pollution degree if the minimum AIR CLEARANCE is 3 mm or more. The minimum width of the groove is:

– *0,25 mm for pollution degree 1*
– *1,0 mm for pollution degree 2*
– *1,5 mm for pollution degree 3*

If the specified minimum AIR CLEARANCE is less than 3 mm, the minimum spacing (X) for grooves transverse to the CREEPAGE DISTANCE is the lesser of:

– *the relevant value specified in the previous paragraph, or*
– *one third of the specified minimum AIR CLEARANCE.*

The minimum spacing (X) for a groove transverse to a CREEPAGE DISTANCE that is considered a MEANS OF PATIENT PROTECTION is 1 mm for pollution degree 1 and pollution degree 2, and 1,5 mm for pollution degree 3.

Any corner with included angle less than 80° is assumed to be bridged with an insulating link of X mm moved into the least favourable position (see Figure 25).

Where the distance across the top of a groove is X mm or more, no CREEPAGE DISTANCE exists across the air space (see Figure 24).

CREEPAGE DISTANCES and AIR CLEARANCES between parts moving relative to each other are measured with the parts in their least favourable positions.

Computed CREEPAGE DISTANCE is never less than measured AIR CLEARANCE.

Coatings of varnish, enamel or oxide are ignored. Coverings of any insulating material, however, are considered as insulation, if the covering is equivalent to a sheet of insulating material of equal thickness with respect to its electrical, thermal and mechanical properties.

If CREEPAGE DISTANCES or AIR CLEARANCES for one or two MEANS OF PROTECTION are interrupted by one or more floating conductive parts, the minimum values specified in Table 12 to Table 16 (inclusive) apply to the sum of the sections, except that distances less than X mm are not taken into consideration.

If there are grooves transverse to the CREEPAGE DISTANCE, the wall of the groove is counted as CREEPAGE DISTANCE only if the width of the groove is more than X mm (see Figure 24). In all other cases the groove is neglected.

In the case of a barrier placed on the surface of insulation or held in a recess, the CREEPAGE DISTANCES are measured over the barrier only if the latter is so affixed that dust and moisture cannot penetrate into the joint or recess.

For ME EQUIPMENT provided with an APPLIANCE INLET, the measurements are made with an appropriate connector inserted. For other ME EQUIPMENT incorporating POWER SUPPLY CORDS,

Copyright International Electrotechnical Commission
Provided by IHS Markit under license with IEC
No reproduction or networking permitted without license from IHS Not for Resale, 08/26/2020 19:12:41 MDT

they are made with supply conductors of the largest cross-sectional area specified by the MANUFACTURER and also without conductors.

Movable parts are placed in the least favourable position; nuts and screws with non-circular heads are tightened in the least favourable position.

CREEPAGE DISTANCES and AIR CLEARANCES through slots or openings in external parts are measured to the standard test finger of Figure 6. If necessary, a force is applied to any point on bare conductors and to the outside of metal ENCLOSURES in an endeavour to reduce the CREEPAGE DISTANCES and AIR CLEARANCES while taking the measurements.

The force is applied by means of a standard test finger having a tip as shown in Figure 6 and has a value of:

2 N for bare conductors;
30 N for ENCLOSURES.

CREEPAGE DISTANCE and AIR CLEARANCES are measured after use of the test hook according to 5.9.2.2, if relevant.

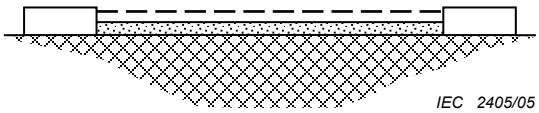

Condition: Path under consideration is a flat surface.

Rule: CREEPAGE DISTANCE and AIR CLEARANCE are measured directly across the surface.

Figure 22 – CREEPAGE DISTANCE and AIR CLEARANCE – Example 1

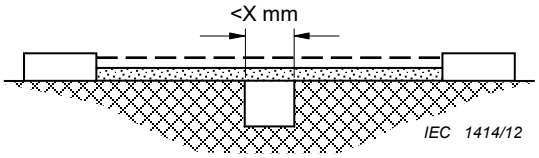

Condition: Path under consideration includes a parallel- or converging-sided groove of any depth with a width less than X mm.

Rule: CREEPAGE DISTANCE and AIR CLEARANCE are measured directly across the groove as shown.

Figure 23 – CREEPAGE DISTANCE and AIR CLEARANCE – Example 2

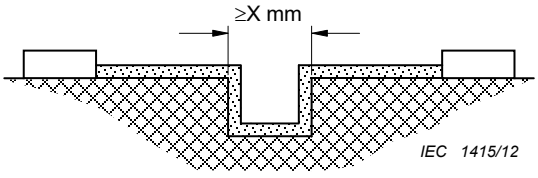

Condition: Path under consideration includes a parallel-sided groove of any depth and equal to or more than X mm.

Rule: AIR CLEARANCE is the “line of sight” distance. CREEPAGE DISTANCE path follows the contour of the groove.

Figure 24 – CREEPAGE DISTANCE and AIR CLEARANCE – Example 3

Copyright International Electrotechnical Commission
Provided by IHS Markit under license with IEC
No reproduction or networking permitted without license from IHS Not for Resale, 08/26/2020 19:12:41 MDT

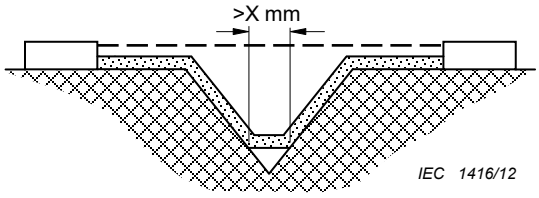

Condition: Path under consideration includes a V-shaped groove with a width greater than X mm and an internal angle of less than 80°.

Rule: AIR CLEARANCE is the "line of sight" distance. CREEPAGE DISTANCE path follows the contour of the groove but "short circuits" the bottom of the groove by a X mm link.

Figure 25 – CREEPAGE DISTANCE and AIR CLEARANCE – Example 4

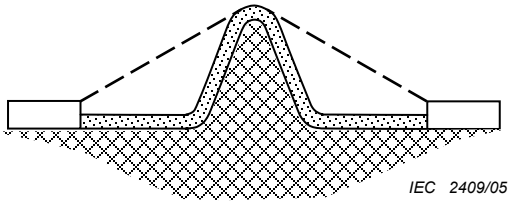

Condition: Path under consideration includes a rib.

Rule: AIR CLEARANCE is the shortest direct air path over the top of the rib. CREEPAGE DISTANCE path follows the contour of the rib.

Figure 26 – CREEPAGE DISTANCE and AIR CLEARANCE – Example 5

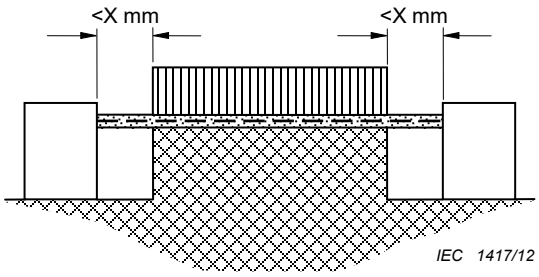

Condition: Path under consideration includes an uncemented joint (see 8.9.3) with grooves less than X mm wide on each side.

Rule: CREEPAGE DISTANCE and AIR CLEARANCE path are the "line of sight" distance shown.

Figure 27 – CREEPAGE DISTANCE and AIR CLEARANCE – Example 6

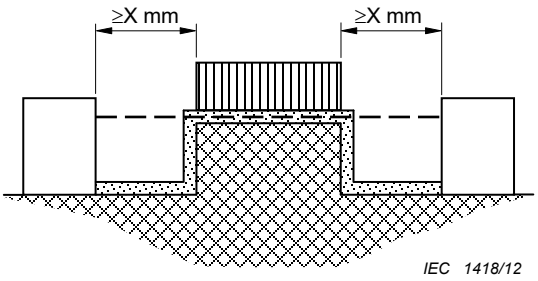

Condition: Path under consideration includes an uncemented joint (see 8.9.3) with grooves equal to or more that X mm wide on each side.

Rule: AIR CLEARANCE is the "line of sight" distance. CREEPAGE DISTANCE path follows the contour of the groove.

Figure 28 – CREEPAGE DISTANCE and AIR CLEARANCE – Example 7

Copyright International Electrotechnical Commission
Provided by IHS Markit under license with IEC
No reproduction or networking permitted without license from IHS
Not for Resale, 08/26/2020 19:12:41 MDT

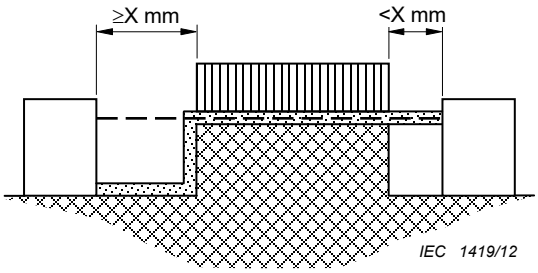

Condition: Path under consideration includes an uncemented joint (see 8.9.3) with a groove on one side less than X mm wide and the groove on the other side equal to or more than X mm wide.

Rule: AIR CLEARANCE and CREEPAGE DISTANCE are as shown.

Figure 29 – CREEPAGE DISTANCE and AIR CLEARANCE – Example 8

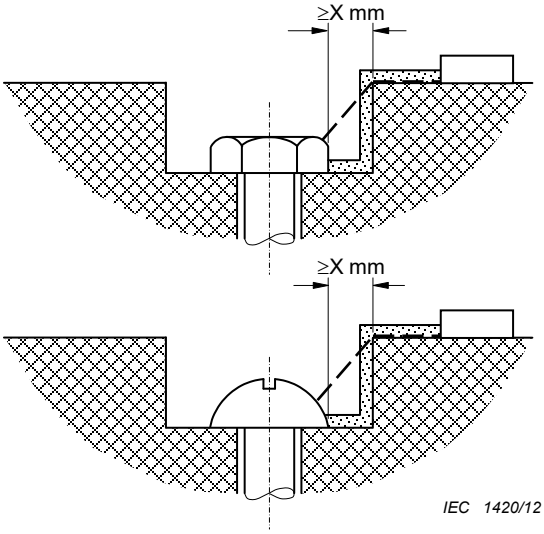

Condition: Gap between head of screw and wall of recess wide enough to be taken into account.

Rule: The AIR CLEARNACE is the shortest distance to any point on the head of the screw. CREEPAGE DISTANCE path follows the surface.

Figure 30 – CREEPAGE DISTANCE and AIR CLEARANCE – Example 9

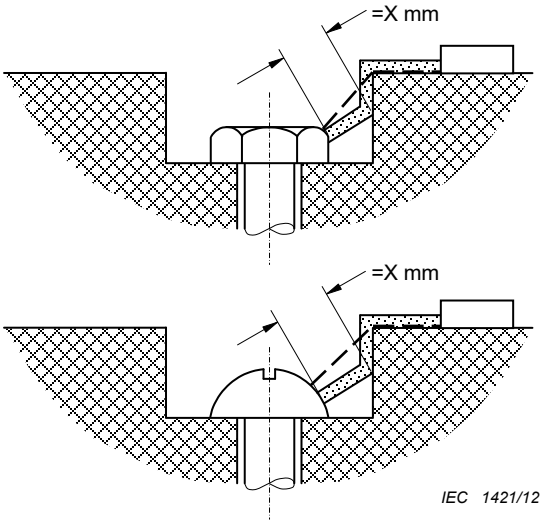

Condition: Gap between head of screw and wall of recess too narrow to be taken into account.

Rule: Measurement of CREEPAGE DISTANCE is from screw to wall at any point where the distance is equal to X mm. The AIR CLEARNACE is the shortest distance to any point on the head of the screw.

Figure 31 – CREEPAGE DISTANCE and AIR CLEARANCE – Example 10

Copyright International Electrotechnical Commission
Provided by IHS Markit under license with IEC
No reproduction or networking permitted without license from IHS
Not for Resale, 08/26/2020 19:12:41 MDT

8.10 Components and wiring

8.10.1 * Fixing of components

Components of ME EQUIPMENT, the unwanted movement of which could result in an unacceptable RISK, shall be mounted securely to prevent such movement.

Compliance is checked by inspection of the ME EQUIPMENT and the RISK MANAGEMENT FILE.

8.10.2 * Fixing of wiring

Conductors and connectors of ME EQUIPMENT shall be so secured or insulated that accidental detachment shall not result in a HAZARDOUS SITUATION. They are not considered to be adequately secured if on breaking free at their joint and moving about their support point they are capable of touching parts resulting in a HAZARDOUS SITUATION described in 13.1.

Breaking free of one means of mechanical restraint shall be considered a SINGLE FAULT CONDITION.

Stranded conductors shall not be solder-coated if they are affixed by any clamping means and poor contact could result in a HAZARDOUS SITUATION described in 13.1.

Compliance is checked by inspection of the ME EQUIPMENT.

8.10.3 Connections between different parts of ME EQUIPMENT

Flexible cords detachable without the use of a TOOL that are used for interconnection of different parts of ME EQUIPMENT shall be provided with means for connection such that compliance of metal ACCESSIBLE PARTS with 8.4 is not compromised when a connection is loosened or broken due to the disengagement of one of the connecting means.

Compliance is checked by inspection and measurement and, if necessary, by a test with the standard test finger according to 5.9.2.1.

8.10.4 * Cord-connected HAND-HELD parts and cord-connected foot-operated control devices (see also 15.4.7)

8.10.4.1 Limitation of operating voltages

Cord-connected HAND-HELD and foot-operated control devices of ME EQUIPMENT and their associated connection cords shall contain only conductors and components operating at voltages not exceeding 42,4 V peak a.c. or 60 V d.c. in circuits isolated from the MAINS PART by two MEANS OF PROTECTION. The d.c. limit of 60 V applies to d.c. with not more than 10 % peak-to-peak ripple. If the ripple exceeds that amount, the 42,4 V peak limit applies.

Compliance is checked by inspection and, if necessary, voltage measurements.

8.10.4.2 Connection cords

The connection and anchorage at both ends of a flexible cord to a HAND-HELD or foot-operated control device of ME EQUIPMENT shall comply with the requirements specified for POWER SUPPLY CORDS in 8.11.3, if breaking free or shorting between the conductors could result in a HAZARDOUS SITUATION described in 13.1. This requirement also applies to other HAND-HELD parts if disturbance or breaking of one or more of the connections could result in a HAZARDOUS SITUATION described in 13.1.

Compliance is checked by performance of the tests of 8.11.3.

8.10.5 * Mechanical protection of wiring

a) Internal cables and wiring shall be adequately protected against contact with a moving part or from friction at sharp corners and edges where damage to insulation could result in a HAZARDOUS SITUATION described in 13.1.

Copyright International Electrotechnical Commission
Provided by IHS Markit under license with IEC
No reproduction or networking permitted without license from IHS Not for Resale, 08/26/2020 19:12:41 MDT

b) ME EQUIPMENT shall be so designed that wiring, cord forms or components are not likely to be damaged during assembly or the opening or closing of ACCESS COVERS where such damage could result in a HAZARDOUS SITUATION described in 13.1.

Compliance is checked by inspection and, where appropriate, by manual test.

8.10.6 Guiding rollers for insulated conductors

Guiding rollers of insulated conductors of ME EQUIPMENT shall be constructed in such a manner that movable insulated conductors in NORMAL USE are not bent round a radius of less than five times the outer diameter of the lead concerned.

Compliance is checked by inspection and measurement of the relevant dimensions.

8.10.7 * Insulation of internal wiring

a) If insulating sleeving is needed on internal wiring of ME EQUIPMENT, it shall be adequately secured. Sleeving that can only be removed by breaking or cutting or that is secured at both ends may be used to satisfy this requirement.

b) Inside ME EQUIPMENT the sheath of a flexible cord shall not be used as a MEANS OF PROTECTION if it is subject to mechanical or thermal stresses outside its RATED characteristics.

c) Insulated conductors of ME EQUIPMENT that in NORMAL USE are subject to temperatures exceeding 70 °C shall have insulation of heat-resistant material if compliance with this standard is likely to be impaired by deterioration of the insulation.

Compliance is checked by inspection and, if necessary, by special tests. Temperatures are determined as indicated in 11.1.

8.11 MAINS PARTS, components and layout

8.11.1 Isolation from the SUPPLY MAINS

a) * ME EQUIPMENT shall have means to isolate its circuits electrically from the SUPPLY MAINS on all poles simultaneously.

PERMANENTLY INSTALLED ME EQUIPMENT connected to a polyphase SUPPLY MAINS may be provided with a device that does not interrupt the neutral conductor, provided that local installation conditions are such that in NORMAL CONDITION the voltage on the neutral conductor can be expected not to exceed the limits specified in 8.4.2 c).

For PERMANENTLY INSTALLED ME EQUIPMENT, the means provided to isolate its circuits electrically from the SUPPLY MAINS shall be capable of being locked in the off position if:

– reconnection would result in a HAZARDOUS SITUATION; or
– any OPERATOR including SERVICE PERSONNEL is unable to view the means of isolation from their intended position.

The locking mechanism may be in a SUPPLY MAINS switch provided by the RESPONSIBLE ORGANIZATION.

The requirements for the isolation device shall be specified in the ACCOMPANYING DOCUMENTS.

b) Means for isolation either shall be incorporated in ME EQUIPMENT or, if external, shall be described in the technical description (see 7.9.3.1).

Copyright International Electrotechnical Commission
Provided by IHS Markit under license with IEC
No reproduction or networking permitted without license from IHS Not for Resale, 08/26/2020 19:12:41 MDT

c) * A SUPPLY MAINS switch that is used to comply with 8.11.1 a) shall comply with the CREEPAGE DISTANCES and AIR CLEARANCES as specified in IEC 61058-1 for a MAINS TRANSIENT VOLTAGE of 4 kV.

NOTE Table 22 in IEC 61058-1:2000 specifies different values for contact separation depending on the MAINS TRANSIENT VOLTAGE , which is referred to in that table as the “rated impulse withstand voltage.”

d) A SUPPLY MAINS switch shall not be incorporated in a POWER SUPPLY CORD or any other external, flexible lead.

e) The actuator of a SUPPLY MAINS switch that is used to comply with 8.11.1 a) shall comply with IEC 60447.

f) In non-PERMANENTLY INSTALLED ME EQUIPMENT that has no SUPPLY MAINS switch, a suitable plug device used to isolate ME EQUIPMENT from the SUPPLY MAINS shall be considered as complying with the requirements of 8.11.1 a). An APPLIANCE COUPLER or a flexible cord with a MAINS PLUG may be used.

g) A fuse or a semiconductor device shall not be used as an isolating means in the sense of this subclause.

h) * ME EQUIPMENT shall not include a device that causes disconnection of the ME EQUIPMENT from the SUPPLY MAINS by producing a short circuit that results in operation of an over-current protection device.

i) * Any part within the ENCLOSURE of ME EQUIPMENT with a circuit voltage exceeding 42,4 V peak a.c. or 60 V d.c. that cannot be disconnected from its supply by an external switch or a plug device that is accessible at all times shall be protected against being touched even after opening of the ENCLOSURE by an additional covering or, in the case of a spatially separated arrangement, shall be marked clearly as exceeding the permitted voltage for parts that can be touched. The use of the symbol ISO 7000-0434 (see Table D.1, symbol 10) is not sufficient. A warning notice on the outside of the ME EQUIPMENT may be used.

Compliance is checked by inspection.

For a part that cannot be disconnected from the supply by an external switch or a plug device that is accessible at all times, compliance is checked by inspection of the required cover or warning notice (if present) and, if necessary, by application of the standard test finger of Figure 6.

8.11.2 * MULTIPLE SOCKET-OUTLETS

MULTIPLE SOCKET-OUTLETS that are integral with ME EQUIPMENT shall comply with the requirements of 16.2 d), second dash, and 16.9.2.1.

Compliance is checked by inspection.

8.11.3 POWER SUPPLY CORDS

8.11.3.1 Application

The MAINS PLUG of ME EQUIPMENT shall not be fitted with more than one POWER SUPPLY CORD.

Compliance is checked by inspection.

8.11.3.2 Types

Any POWER SUPPLY CORD of ME EQUIPMENT shall be not less robust than ordinary tough rubber-sheathed flexible cord (IEC 60245-1:2003, Annex A, designation 53) or ordinary polyvinyl chloride sheathed flexible cord (IEC 60227-1:1993, Annex A, designation 53).

Copyright International Electrotechnical Commission
Provided by IHS Markit under license with IEC
No reproduction or networking permitted without license from IHS Not for Resale, 08/26/2020 19:12:41 MDT

A polyvinyl chloride insulated POWER SUPPLY CORD shall not be used for ME EQUIPMENT having external metal parts with a temperature exceeding 75 °C and which can be touched in NORMAL USE by the cord, unless it is RATED for that temperature. See also Table 22.

Compliance is checked by inspection and measurement.

8.11.3.3 Cross-sectional area of POWER SUPPLY CORD conductors

The NOMINAL cross-sectional area of conductors of any POWER SUPPLY CORD of ME EQUIPMENT shall be not less than that shown in Table 17. For ME EQUIPMENT utilizing POWER SUPPLY CORDS and operating at currents greater than 63 A, apply the electrical regulations appropriate for the jurisdiction in which the ME EQUIPMENT is to be used.

Compliance is checked by inspection.

Table 17 – NOMINAL cross-sectional area of conductors of a POWER SUPPLY CORD

RATED current (*I*) of ME EQUIPMENT A	NOMINAL cross-sectional area mm^2 Cu
$I \leq 6$	0,75
$6 < I \leq 10$	1
$10< I \leq 16$	1,5
$16< I \leq 25$	2,5
$25< I \leq 32$	4
$32< I \leq 40$	6
$40< I \leq 63$	10

8.11.3.4 * APPLIANCE COUPLERS

APPLIANCE COUPLERS complying with IEC 60320-1 are considered to comply with 8.11.3.5 and 8.11.3.6.

Compliance is checked by inspection of the documentation demonstrating that the APPLIANCE COUPLER conforms to the requirements of IEC 60320-1.

8.11.3.5 * Cord anchorage

a) The conductors of a POWER SUPPLY CORD shall be relieved from strain, including twisting, and the insulation of the conductors shall be protected from abrasion at the point of entry to ME EQUIPMENT or a MAINS CONNECTOR by a cord anchorage.

b) If a total insulation failure of the POWER SUPPLY CORD could cause conductive ACCESSIBLE PARTS that are not PROTECTIVELY EARTHED to exceed the limits specified in 8.4, the cord anchorage of a POWER SUPPLY CORD shall be made:

   – of insulating material, or

   – of metal, insulated from conductive ACCESSIBLE PARTS not PROTECTIVELY EARTHED by a MEANS OF PROTECTION, or

   – of metal provided with an insulating lining, which shall be affixed to the cord anchorage, unless it is a flexible bushing that forms part of the cord guard specified in 8.11.3.6, and which shall comply with the requirements for one MEANS OF PROTECTION.

c) The cord anchorage of a POWER SUPPLY CORD shall be so designed that the cord is not clamped by a screw that bears directly on the cord insulation.

Copyright International Electrotechnical Commission
Provided by IHS Markit under license with IEC
No reproduction or networking permitted without license from IHS Not for Resale, 08/26/2020 19:12:41 MDT

d) Screws, if any, that have to be operated when replacing the POWER SUPPLY CORD shall not serve to fix any component other than parts of the cord anchorage.

e) Conductors of the POWER SUPPLY CORD shall be so arranged that if the cord anchorage fails the PROTECTIVE EARTH CONDUCTOR is not subject to strain as long as the phase conductors are in contact with their terminals.

f) The cord anchorage shall prevent the POWER SUPPLY CORD from being pushed into the ME EQUIPMENT or MAINS CONNECTOR.

Compliance is checked by inspection and by the following tests:

ME EQUIPMENT, if designed for a POWER SUPPLY CORD, is tested with the cord supplied by the MANUFACTURER.

The POWER SUPPLY CORD conductors are, if possible, disconnected from the terminals or from the MAINS CONNECTOR.

The cord is subjected 25 times to a pull on the sheath of the value shown in Table 18. The pulls are applied in the most unfavourable direction without jerks, each time for 1 s.

Immediately afterwards, the cord is subjected for 1 min to a torque of the value shown in Table 18.

Table 18 – Testing of cord anchorages

Mass (*m*) of ME EQUIPMENT kg	**Pull** N	**Torque** Nm
$m \leq 1$	30	0,1
$1 < m \leq 4$	60	0,25
$m > 4$	100	0,35

A cord anchorage that allows the cord sheath to be longitudinally displaced by more than 2 mm or the conductor ends to move over a distance of more than 1 mm from their normally connected position is considered to fail.

CREEPAGE DISTANCES and AIR CLEARANCES that are reduced below the values specified in 8.9 constitutes a failure.

Attempt to push the cord into the ME EQUIPMENT or the MAINS CONNECTOR. If the cord can be pushed into the ME EQUIPMENT or the MAINS CONNECTOR to such an extent that the cord or internal parts are damaged, the cord anchorage is considered to fail.

8.11.3.6 * Cord guards

POWER SUPPLY CORDS of other than STATIONARY ME EQUIPMENT shall be protected against excessive bending at the inlet opening of the equipment or of the MAINS CONNECTOR by means of a cord guard of insulating material or by means of an appropriately shaped opening in the ME EQUIPMENT.

Compliance is checked by inspection and by either the test described in IEC 60335-1:2001, subclause 25.14 or the following test. An arrangement that passes either test is considered to comply with the requirement.

ME EQUIPMENT having a cord guard or opening is so placed that the axis of the cord guard, where the cord leaves it, projects at an angle of 45° when the cord is free from stress. A mass equal to 10 x D^2 gram is then attached to the free end of the cord, where D is the overall diameter of, or for flat cords, the minor overall dimension of the POWER SUPPLY CORD in millimetres.

--`,,```,,,,````-`-`,,`,,`,`,,`---

Copyright International Electrotechnical Commission
Provided by IHS Markit under license with IEC
No reproduction or networking permitted without license from IHS Not for Resale, 08/26/2020 19:12:41 MDT

If the cord guard is of temperature-sensitive material, the test is made at 23 °C ± 2 °C.

Flat cords are bent in the plane of least resistance.

If the radius of curvature of the cord, immediately after the mass has been attached, is anywhere less than 1,5 x D, the cord guard is considered to fail.

8.11.4 MAINS TERMINAL DEVICES

8.11.4.1 * General requirements for MAINS TERMINAL DEVICES

PERMANENTLY INSTALLED ME EQUIPMENT and ME EQUIPMENT having a non-DETACHABLE POWER SUPPLY CORD that is replaceable by SERVICE PERSONNEL shall be provided with MAINS TERMINAL DEVICES that ensure reliable connection.

Reliance shall not be placed upon the terminals alone to maintain the conductors in position, unless barriers are provided such that CREEPAGE DISTANCES and AIR CLEARANCES that serve as a MEANS OF PROTECTION cannot be reduced to less than the values specified in 8.9, if any conductor breaks away. See also 8.10.2.

Terminals of components other than terminal blocks may be used as terminals intended for external conductors if they comply with the requirements of this subclause and are properly marked according to 7.3.7.

Screws and nuts that clamp external conductors shall not serve to fix any other component, except that they may also clamp internal conductors if these are so arranged that they are unlikely to be displaced when fitting the supply conductors.

Compliance is checked by inspection.

8.11.4.2 Arrangement of MAINS TERMINAL DEVICES

a) * For ME EQUIPMENT with rewirable cords where terminals are provided for the connection of external cords or POWER SUPPLY CORDS, these terminals together with any PROTECTIVE EARTH TERMINAL shall be closely grouped, so as to provide a convenient means of connection.

   Compliance is checked by inspection.

b) For details of PROTECTIVE EARTH CONDUCTOR connections, see 8.6.

c) For marking of MAINS TERMINAL DEVICES, see 7.3.

d) MAINS TERMINAL DEVICES shall not be accessible without the use of a TOOL.

   Compliance is checked by inspection.

e) MAINS TERMINAL DEVICES shall be so located or shielded that, if a wire of a stranded conductor escapes when the conductors are fitted, short circuiting a MEANS OF PROTECTION is unlikely.

   Compliance is checked by inspection and, if necessary, by the following test:

   The end of a flexible conductor having the NOMINAL cross-sectional area specified in Table 17 is stripped of its insulation for a length of 8 mm.

   A single wire of the stranded conductor is left free and the rest of the conductor is secured to the terminal.

   The free wire is bent in every possible direction without pulling back the insulating sheath and without making sharp bends around partitions.

--`,,```,,,,````-`-`,,`,,`,`,,`---

Copyright International Electrotechnical Commission
Provided by IHS Markit under license with IEC
No reproduction or networking permitted without license from IHS Not for Resale, 08/26/2020 19:12:41 MDT

Contact between the free wire and any other part such that a MEANS OF PROTECTION is short circuited constitutes a failure.

8.11.4.3 Fixing of mains terminals

Terminals shall be FIXED such that, when the means for clamping the conductors are tightened or loosened, the internal wiring is not subjected to stress and CREEPAGE DISTANCES and AIR CLEARANCES are not reduced below the values specified in 8.9.

Compliance is checked by inspection and by measurement after fastening and loosening a conductor of the largest cross-sectional area specified 10 times.

8.11.4.4 * Connections to mains terminals

Terminals with clamping means for a rewirable flexible cord shall not require special preparation of the conductors in order to effect correct connection, and they shall be so designed or placed that the conductors are not damaged and cannot slip out when the clamping means are tightened. See also 8.10.2.

Compliance is checked by inspection of the terminals and of the conductors after the test of 8.11.3.4.

8.11.4.5 Accessibility of the connection

The space inside ME EQUIPMENT designed for FIXED wiring or a rewirable POWER SUPPLY CORD shall be adequate to allow conductors to be easily introduced and connected, and covers, if any, to be fitted without damage to the conductors or their insulation. It shall be possible to check that the conductors are correctly connected and positioned before the ACCESS COVER is fitted. See also 8.10.5.

Compliance is checked by inspection and by an installation test.

8.11.5 * Mains fuses and OVER-CURRENT RELEASES

A fuse or OVER-CURRENT RELEASE shall be provided in each supply lead for CLASS I ME EQUIPMENT and for CLASS II ME EQUIPMENT having a functional earth connection according to 8.6.9, and in at least one supply lead for other single-phase CLASS II ME EQUIPMENT, except that:

– for PERMANENTLY INSTALLED ME EQUIPMENT, the neutral conductor shall not be fused;

– if examination shows that two MEANS OF PROTECTION are present between all parts of opposite polarity within the MAINS PART, and between all parts of the MAINS PART and earth, then the fuses or OVER-CURRENT RELEASES may be omitted. These insulation requirements shall be continued up to and within any component. The effect of short-circuit fault conditions in other circuits shall be VERIFIED before eliminating fuses or OVER-CURRENT RELEASES.

A PROTECTIVE EARTH CONDUCTOR shall not incorporate a fuse or OVER-CURRENT RELEASE.

Protective devices shall be of a breaking capacity based on the MANUFACTURER'S expectation of the highest branch circuit current and/or prospective short circuit current.

Justification for omission of fuses or OVER-CURRENT RELEASES shall be documented.

Compliance is checked by inspection of the ME EQUIPMENT and the MANUFACTURER'S documentation.

8.11.6 Internal wiring of the MAINS PART

a) Internal wiring in a MAINS PART between the MAINS TERMINAL DEVICE or the APPLIANCE INLET and the protective devices shall have a cross-sectional area not less than the minimum required for the POWER SUPPLY CORD as specified in 8.11.3.3.

Compliance is checked by inspection.

Copyright International Electrotechnical Commission
Provided by IHS Markit under license with IEC
No reproduction or networking permitted without license from IHS Not for Resale, 08/26/2020 19:12:41 MDT

b) The cross-sectional area of other wiring in the MAINS PART and the sizes of tracks on printed wiring circuits of ME EQUIPMENT shall be sufficient to prevent fire in case of possible fault currents.

When necessary, compliance is checked by connecting the ME EQUIPMENT to a specified SUPPLY MAINS from which the most unfavourable short-circuit current expected can be drawn in the event of a fault in the MAINS PART. Subsequently, a fault in a single insulation in the MAINS PART is simulated so that the fault current is the least favourable. The occurrence of any HAZARDOUS SITUATIONS listed in 13.1.2 constitutes a failure.

9 * Protection against MECHANICAL HAZARDS of ME EQUIPMENT and ME SYSTEMS

9.1 MECHANICAL HAZARDS of ME EQUIPMENT

For general requirements on design and manufacture of ME EQUIPMENT, see Clause 4 and 15.3.

Table 19 identifies the subclauses that address the MECHANICAL HAZARDS.

Table 19 – MECHANICAL HAZARDS covered by this clause

MECHANICAL HAZARD	Covered by subclause
Crushing HAZARD	9.2, 9.4 and 9.8
Shearing HAZARD	9.2 and 9.8
Cutting or severing HAZARD	9.2, 9.3 and 9.8
Entanglement HAZARD	9.2
Trapping HAZARD	9.2
Stabbing or puncturing HAZARD	9.2, 9.3 and 9.8
Friction or abrasion HAZARD	9.2 and 9.3
Expelled parts HAZARD	9.5
High pressure fluid ejection HAZARD	9.7
Falling HAZARD	9.8
Instability HAZARD	9.4
Impact HAZARD	9.2 and 9.8
Moving and positioning of PATIENT	9.2 and 9.4
Vibration and noise	9.6

9.2 * MECHANICAL HAZARDS associated with moving parts

9.2.1 * General

ME EQUIPMENT with moving parts shall be designed, built and laid out so that, when PROPERLY INSTALLED and used as indicated in the ACCOMPANYING DOCUMENTS or under reasonably foreseeable misuse, the RISKS associated with those moving parts are reduced to an acceptable level.

The RISK from contact with the moving parts shall be reduced to an acceptable level by use of RISK CONTROL measures, bearing in mind the ease of access, the ME EQUIPMENT'S function, the shape of the parts, the energy and speed of the motion and the benefits to the PATIENT.

The RESIDUAL RISK associated with moving parts is considered acceptable if exposure is needed for the ME EQUIPMENT to perform its intended function, and RISK CONTROL measures have been implemented (e.g. warnings).

NOTE 1 Requirements for parts subject to wear are found in 15.2.

Copyright International Electrotechnical Commission
Provided by IHS Markit under license with IEC
No reproduction or networking permitted without license from IHS Not for Resale, 08/26/2020 19:12:41 MDT

NOTE 2 See ISO 14971:2019, subclauses 7.1 and 7.4.

9.2.2 TRAPPING ZONE

9.2.2.1 General

Where feasible, ME EQUIPMENT with a TRAPPING ZONE shall comply with the requirements of one or more of the following:

– gaps as specified in 9.2.2.2; or

– safe distances as specified in 9.2.2.3; or

– GUARDS and other RISK CONTROL measures as specified in 9.2.2.4; or

– continuous activation as specified in 9.2.2.5.

If implementation of the above RISK CONTROL measures would be inconsistent with the INTENDED USE of the ME EQUIPMENT or the ME SYSTEM, control of the relevant motion shall comply with 9.2.2.6.

9.2.2.2 Gaps

A TRAPPING ZONE is considered not to present a MECHANICAL HAZARD if the gaps of the TRAPPING ZONE comply with the dimensions specified in Table 20.

NOTE In general the values for adults should be used. However, in the case of devices specifically designed for use with children, the dimensions given for children should be applied.

9.2.2.3 Safe distances

A TRAPPING ZONE is considered not to present a MECHANICAL HAZARD if the distances separating the OPERATOR, PATIENT and other persons from the TRAPPING ZONES exceed the values specified in ISO:13857:2008. The distances are measured from the expected positions of the OPERATOR, PATIENT and other persons near the ME EQUIPMENT in NORMAL USE or under reasonably foreseeable misuse.

9.2.2.4 * GUARDS and other RISK CONTROL measures

9.2.2.4.1 Access to TRAPPING ZONES

A TRAPPING ZONE is considered not to present a MECHANICAL HAZARD if GUARDS or other RISK CONTROL measures (e.g. electro-mechanical):

– are of robust construction;

– are not easy to bypass or render non-operational;

– do not introduce any additional unacceptable RISK.

NOTE RISK CONTROL measures (e.g. electro-mechanical) addressed by this subclause are intended to include collision detection or collision avoidance systems, such as those employing light barrier(s) and similar feedback control(s).

Compliance is checked by the applicable tests of 15.3 for ENCLOSURES.

9.2.2.4.2 FIXED GUARDS

FIXED GUARDS shall be securely held in place by systems that cannot be dismantled without the use of a TOOL.

Compliance is checked by inspection.

Copyright International Electrotechnical Commission
Provided by IHS Markit under license with IEC
No reproduction or networking permitted without license from IHS Not for Resale, 08/26/2020 19:12:41 MDT

Table 20 – Acceptable gaps [a]

Part of body	Adult gap *a* mm	Children gap *a* mm	Illustration
Body	>500	>500	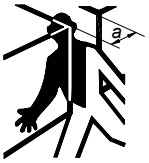
Head	>300 or <120	>300 or <60	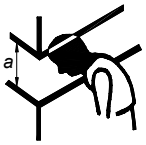
Leg	>180	>180	
Foot	>120 or <35	>120 or <25	
Toes	>50	>50	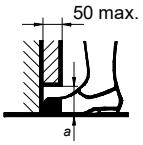
Arm	>120	>120	
Hand, wrist, fist	>100	>100	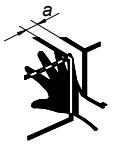
Finger	> 25 or < 8	> 25 or < 4	
[a] The values in this table are taken from ISO13857:2008.			

Copyright International Electrotechnical Commission
Provided by IHS Markit under license with IEC
No reproduction or networking permitted without license from IHS
Not for Resale, 08/26/2020 19:12:41 MDT

9.2.2.4.3 Movable GUARDS

Movable GUARDS that can be opened without the use of a TOOL:

– shall remain attached to the ME EQUIPMENT when the GUARD is open;

– shall be associated with an interlock device that prevents the relevant moving parts from starting to move while the TRAPPING ZONE is accessible and stops movement when the GUARD is opened;

– shall be so designed that the absence or failure of one of their components prevents starting, and stops moving parts.

Compliance is checked by conducting any applicable tests and inspection of the ME EQUIPMENT and the RISK MANAGEMENT FILE.

9.2.2.4.4 Protective measures

Protective measures shall be designed and incorporated into the control system so that:

– moving parts cannot start to move while they are in the reach of persons;

Other RISK CONTROL measures (e.g. electro-mechanical) shall be designed and incorporated into the control system so that:

– once the ME EQUIPMENT has started to move, if the TRAPPING ZONE is reached, system movement shall stop; and

– if the RISK CONTROL measure is defeated in a SINGLE FAULT CONDITION, a second RISK CONTROL measure shall be provided, such as one or more emergency stopping device(s) (see 9.2.4), or the ME EQUIPMENT shall otherwise be SINGLE FAULT SAFE (see 4.7).

Compliance is checked by the following as necessary:

– *inspection of the ME EQUIPMENT;*

– *examination of the construction and circuits;*

– *conducting any applicable tests including, if necessary, tests under SINGLE FAULT CONDITION.*

9.2.2.5 * Continuous activation

Where it is impractical to make the TRAPPING ZONE inaccessible, continuous activation may be used as a RISK CONTROL measure.

A TRAPPING ZONE is not considered to present a MECHANICAL HAZARD if:

a) the movement is in the OPERATOR'S field of view;

Compliance is checked by inspection.

b) movement of the ME EQUIPMENT or its parts is possible only by the continuous activation of the control by the OPERATOR as long as the response of the OPERATOR to deactivate the device can be relied on to prevent HARM;

NOTE Manually operated movements are also considered to comply with this clause, as long as mass and velocity allow adequate control of positioning without causing an unacceptable RISK.

Compliance is checked by inspection.

c) the continuous activation system is defeated in a SINGLE FAULT CONDITION, then a second RISK CONTROL measure shall be provided, such as one or more emergency stopping device(s) (see 9.2.4), or the ME EQUIPMENT shall otherwise be SINGLE FAULT SAFE (see 4.7).

Compliance is checked by the following as necessary:

Copyright International Electrotechnical Commission
Provided by IHS Markit under license with IEC
No reproduction or networking permitted without license from IHS Not for Resale, 08/26/2020 19:12:41 MDT

- *inspection of the ME EQUIPMENT;*
- *examination of the construction and circuits;*
- *conducting any applicable tests including, if necessary, tests under SINGLE FAULT CONDITION.*

9.2.2.6 * Speed of movement(s)

The speed of movement(s) that position parts of the ME EQUIPMENT or PATIENT, where contact with the ME EQUIPMENT could result in an unacceptable RISK, shall be limited so that the OPERATOR will have adequate control of the movement.

The overtravel (stopping distance) of such movement, occurring after operation of a control to stop the movement, shall not result in an unacceptable RISK.

Compliance is checked by the following as necessary:

- *inspection of the overtravel (stopping distance) calculations and evaluation;*
- *any functional tests*.

NOTE The overtravel (stopping distance) calculations and evaluation are part of the RISK MANAGEMENT FILE.

9.2.3 * Other MECHANICAL HAZARDS associated with moving parts

9.2.3.1 Unintended movement

Controls shall be so positioned, recessed, or protected by other means so that they cannot be accidentally actuated, unless for the intended PATIENT, the USABILITY ENGINEERING PROCESS concludes otherwise (e.g. PATIENT with special needs) or activation does not result in an unacceptable RISK.

Compliance is checked by inspection of ME EQUIPMENT, and, if the control is part of the PRIMARY OPERATING FUNCTIONS, inspection of the USABILITY ENGINEERING FILE.

9.2.3.2 Overtravel end stops

Overtravel past range limits of ME EQUIPMENT parts shall be prevented. End stops or other stopping means shall be provided to act as the ultimate travel limiting measure.

Such means shall have the mechanical strength to withstand the intended loading in NORMAL USE and reasonably foreseeable misuse.

Compliance is checked by inspection of the ME EQUIPMENT and the following test:

The ME EQUIPMENT is

- *loaded with the SAFE WORKING LOAD,*
- *unloaded, or*
- *loaded to any intermediate level that is likely to provide the most severe test result.*

The moving part is to be driven against each end stop or other mechanical means for the number of cycles, operating speed and test conditions as specified in Table 33. The end stops or other mechanical means required shall be capable of performing their intended function upon completion of the test.

Copyright International Electrotechnical Commission
Provided by IHS Markit under license with IEC
No reproduction or networking permitted without license from IHS Not for Resale, 08/26/2020 19:12:41 MDT

Table 33 – Test conditions for overtravel end stop test

Construction	Number of cycles	Test condition
1. Motor driven: No range limit system provided [a]	6 000	Run at maximum speed
2. Motor driven: Non-independent range limit system or systems provided [a, b]	50	Defeat all switches simultaneously, and run at maximum speed
3. Motor driven: Two or more independent range limit systems [a, b]	1	Defeat all switches simultaneously, and run at maximum speed
4. Manually driven or manually driven, power assisted	50	Run at any speed, including reasonably foreseeable misuse

[a] A range limit system consists of all components required to stop motion, for example, it may consist of (1) a limit switch, (2) sensing circuits, and (3) related mechanical actuating mechanism.

[b] To qualify as an independent range limit system, each system shall, in addition to the criteria in footnote [a], comply with both of the following:

1. the system is capable of de-energizing the motor(s) directly; that is, the switch or motor controller circuit interrupts the motor's rotor or stator current, or both, and
2. the system provides a means by which a malfunction of one range limit system is made obvious to the OPERATOR. This may be an audible, visual or otherwise discernible indicator.

9.2.4 * Emergency stopping devices

Where it is considered necessary to have one or more emergency stopping device(s), the emergency stopping device shall comply with all the following requirements.

a) The emergency stopping device shall reduce the RISK to an acceptable level.

b) The proximity and response of the OPERATOR to actuate the emergency stopping device can be relied on to prevent HARM.

c) The emergency stopping device actuator shall be readily accessible to the OPERATOR.

d) Emergency stopping device(s) shall not be part of the normal operation of the ME EQUIPMENT.

e) Operation of an emergency switching or stopping means shall neither introduce a further MECHANICAL HAZARD nor interfere with the complete operation necessary to remove the original HAZARD.

f) Emergency stopping device(s) shall be able to break the full load of the relevant circuit, taking into account possible stalled motor currents and the like.

g) Means for stopping of movements shall operate as a result of one single action.

h) The emergency stopping device shall have an actuator coloured red designed to be distinctive and easily identifiable from that of other controls.

i) An actuator that interrupts/opens mechanical movements shall be marked on, or immediately adjacent to, the face of the actuator with symbol IEC 60417-5638 (2002-10) (see Table D.1, symbol 18) or the word "STOP".

NOTE If the actuator is a switch that interrupts all power, compliance with the above marking requirement is not required.

j) The emergency stopping device, once actuated, shall maintain the ME EQUIPMENT in the disabled condition until a deliberate action, different from that used to actuate it, is performed.

Copyright International Electrotechnical Commission
Provided by IHS Markit under license with IEC
No reproduction or networking permitted without license from IHS Not for Resale, 08/26/2020 19:12:41 MDT

k) The emergency stopping device shall be shown to be suitable for its application.

Compliance is checked by inspection of the ME EQUIPMENT and the RISK MANAGEMENT FILE, and by functional tests.

9.2.5 * Release of PATIENT

Means shall be provided to permit the release of the PATIENT quickly and safely in the event of breakdown of the ME EQUIPMENT or failure of the power supply (see 11.8), activation of a RISK CONTROL measure or emergency stopping. Special attention shall be given to the following.

– Uncontrolled or unintended movement of the ME EQUIPMENT that could result in an unacceptable RISK shall be prevented.
– Situations where the PATIENT is subjected to unacceptable RISKS due to the proximity of moving parts, removal of normal exit routes, or other HAZARDS, shall be prevented.
– When, after removal of counterbalanced parts, other parts of the ME EQUIPMENT can move in a hazardous way, measures shall be provided to reduce the RISK to an acceptable level.

Compliance is checked by inspection of the ME EQUIPMENT and the RISK MANAGEMENT FILE, and by functional tests.

9.3 * MECHANICAL HAZARD associated with surfaces, corners and edges

Rough surfaces, sharp corners and edges of ME EQUIPMENT that could cause injury or damage shall be avoided or covered.

In particular, attention shall be paid to flange or frame edges and the removal of burrs.

Compliance is checked by inspection of the ME EQUIPMENT and the RISK MANAGEMENT FILE.

NOTE 1 If inspection is insufficient to determine sharpness of edges or burrs, the rationale for 9.3 provides a reference to an optional functional test.

NOTE 2 A sharp edge MECHANICAL HAZARD could cut wire insulation which could lead to an electrical HAZARD. This requirement is intended to cover all these HAZARDS.

9.4 * Instability HAZARDS

9.4.1 General

ME EQUIPMENT and its parts, other than FIXED ME EQUIPMENT, intended to be placed on a surface such as a floor or a table in NORMAL USE shall not overbalance (tip over) or move unexpectedly.

NOTE HAND-HELD parts of FIXED ME EQUIPMENT are intended to be tested.

Compliance is checked by the tests in 9.4.2 to 9.4.4 (inclusive). Each test is performed separately.

9.4.2 * Instability – overbalance

9.4.2.1 Instability in transport position

ME EQUIPMENT or its parts shall not overbalance when placed in any transport position of NORMAL USE on a plane inclined at an angle of 10° from the horizontal plane.

NOTE The meaning of transport in this subclause is moving ME EQUIPMENT from room to room during NORMAL USE.

Compliance is checked by the following test:

Prior to the test the ME EQUIPMENT is prepared as indicated in the ACCOMPANYING DOCUMENTS (or, if not specified, as in 9.4.2.2). The ME EQUIPMENT or its parts is placed on a plane inclined at an angle 10° from the horizontal plane. If the ME EQUIPMENT or its parts overbalances, it constitutes a failure.

Copyright International Electrotechnical Commission
Provided by IHS Markit under license with IEC
No reproduction or networking permitted without license from IHS Not for Resale, 08/26/2020 19:12:41 MDT

9.4.2.2 Instability excluding transport position

ME EQUIPMENT or its parts shall not overbalance when placed in any position of NORMAL USE, excluding any transport positions, on a plane inclined at an angle of 5° from the horizontal plane.

If the ME EQUIPMENT or its parts overbalances when placed in any position of NORMAL USE, excluding any transport positions, on a plane inclined at an angle of 10° from the horizontal plane, it shall carry a warning notice stating that transport should only be undertaken in a certain condition that shall be clearly described in the instructions for use or marked on the ME EQUIPMENT with an indication of the RESIDUAL RISK if the ME EQUIPMENT or its parts overbalances.

NOTE For warning notice requirements, see 7.9.2.2.

Compliance is checked by the following test:

Prior to conducting the test, the ME EQUIPMENT is prepared as follows:

a) *ME EQUIPMENT is provided with all specified connection leads, the POWER SUPPLY CORD and any interconnecting cords. It is provided with the least favourable combination of possible detachable parts, ACCESSORIES and load as specified in NORMAL USE.*

b) *ME EQUIPMENT having an APPLIANCE INLET is provided with the specified DETACHABLE POWER SUPPLY CORD.*

c) *The connection leads are laid down on the inclined plane in the position most unfavourable for stability.*

d) *If castors/wheels are present, they are temporarily immobilized, if necessary by blocking, in their most disadvantageous position.*

e) *Doors, drawers, shelves and the like are placed in the most disadvantageous position and fully loaded or unloaded whichever represents "worst case" as specified in NORMAL USE according to the ACCOMPANYING DOCUMENTS.*

f) *ME EQUIPMENT having containers for liquids is tested with these containers completely or partly filled or empty, whichever is least favourable.*

g) *The ME EQUIPMENT is not connected to the SUPPLY MAINS.*

The test floor surface is to be hard and flat (e.g. concrete floor covered with 2 mm to 4 mm thick vinyl flooring material).

The ME EQUIPMENT or the ME EQUIPMENT parts is placed on a plane inclined at an angle of 10° from the horizontal plane, or, if a warning notice is present, compliance is checked by inspection of the warning notice and the ME EQUIPMENT or its parts is placed on a plane inclined at an angle of 5° from the horizontal plane. If the ME EQUIPMENT or its parts overbalances, it constitutes a failure.

9.4.2.3 Instability from horizontal and vertical forces

a) * ME EQUIPMENT or its parts having a mass of 25 kg or more other than FIXED ME EQUIPMENT that is intended to be used on the floor shall be permanently marked with a CLEARLY LEGIBLE warning of this RISK, e.g. by use of SAFETY SIGN ISO 7010-P017 (see Table D.2, SAFETY SIGN 5), or it shall not overbalance due to being pushed, leaned, rested upon etc.

If marking is provided because the ME EQUIPMENT overbalances, the marking shall be visible during NORMAL USE, but not on surfaces for which pushing is associated with NORMAL USE (e.g. surfaces with handles).

Copyright International Electrotechnical Commission
Provided by IHS Markit under license with IEC
No reproduction or networking permitted without license from IHS Not for Resale, 08/26/2020 19:12:41 MDT

Compliance is checked by inspection of the marking provided or the following test:

Prior to the test, the ME EQUIPMENT is prepared as described in 9.4.2.2. The ME EQUIPMENT is placed on a horizontal plane and a force equal to 15 % of its weight, but not more than 150 N, is applied in any direction, except a direction having an upward component. Unless otherwise marked, the force is applied at any point of the ME EQUIPMENT but not exceeding 1,5 m from the floor. The ME EQUIPMENT is prevented from sliding on the floor by a horizontal obstruction, not exceeding 20 mm height, which is fastened flat on the floor. If the application of the test force results in lateral movement of the ME EQUIPMENT, increase the height of the obstruction to the minimum extent necessary to prevent lateral movement. ME EQUIPMENT without marking shall not overbalance.

b) ME EQUIPMENT or its parts, other than FIXED ME EQUIPMENT, that is intended to be used on the floor or on a table shall be permanently marked with a CLEARLY LEGIBLE warning of this RISK, e.g. by use of SAFETY SIGNS ISO 7010-P018 or ISO 7010-P019 as appropriate (see Table D.2, SAFETY SIGNS 6 and 7), or it shall not overbalance due to being sat or stepped upon.

NOTE Requirements for PATIENT support surfaces are found in 9.8.3.

If marking is provided because the ME EQUIPMENT overbalances, the marking shall be visible during potential stepping or sitting misuse.

Compliance is checked by inspection of the marking provided or by the following test:

Prior to the test the ME EQUIPMENT is prepared as described in 9.4.2.2. The ME EQUIPMENT is placed on a horizontal plane and a constant downward force of 800 N is applied at the point of maximum moment to any working surface, excluding PATIENT support surfaces, offering an obvious foothold or sitting surface of a minimum 20 cm by 20 cm area, and at a height not exceeding 1 m from the floor. ME EQUIPMENT without marking shall not overbalance.

9.4.2.4 * Castors and wheels

9.4.2.4.1 General

The means used for transportation of MOBILE ME EQUIPMENT, e.g. castors or wheels, shall not result in an unacceptable RISK when the MOBILE ME EQUIPMENT is moved or parked in NORMAL USE.

9.4.2.4.2 Force for propulsion

The force required for moving MOBILE ME EQUIPMENT along a hard and flat horizontal surface shall not exceed 200 N unless the instructions for use state that more than one person is needed.

Compliance is checked by placing the ME EQUIPMENT on a hard flat horizontal floor (e.g. concrete floor covered with 2 mm to 4 mm thick vinyl flooring material) and measuring the force needed to propel the ME EQUIPMENT at a speed of 0,4 m/s ± 0,1 m/s. The force is applied at a height of 1 m above the floor or at the highest point on the ME EQUIPMENT if its height is less than 1 m.

9.4.2.4.3 * Movement over a threshold

MOBILE ME EQUIPMENT exceeding 45 kg shall be able to pass over a 10 mm threshold. Passing over a 10 mm threshold shall not result in overbalancing.

Compliance is checked by the following test:

The ME EQUIPMENT is configured in transport position with any SAFE WORKING LOAD *in place as indicated in the* ACCOMPANYING DOCUMENTS*. The ME EQUIPMENT is moved as in NORMAL USE 10 times in forward direction over (up and down) a solid vertical plane obstruction that is affixed flat on the floor. The obstruction shall have a rectangular cross section of 10 mm ± 0,5 mm*

Copyright International Electrotechnical Commission
Provided by IHS Markit under license with IEC
No reproduction or networking permitted without license from IHS Not for Resale, 08/26/2020 19:12:41 MDT

high and at least 80 mm wide with a radius of 2 mm ± 0,1 mm at the top edges. The method of passing over the obstruction has to be applied in accordance with the instructions in the ACCOMPANYING DOCUMENTS, or if no instructions are given, by the following test.

All wheels and castors are to impact the obstruction at a speed of 0,8 m/s ± 0,1 m/s for manual MOBILE ME EQUIPMENT, or, for motor driven MOBILE ME EQUIPMENT, the maximum speed capable of being maintained. Manual MOBILE ME EQUIPMENT is propelled by a force acting at its handle.

It is unacceptable for ME EQUIPMENT to be unable to go over (up) the obstruction (due to small wheel diameter, for example). Overbalancing constitutes a failure. BASIC SAFETY and ESSENTIAL PERFORMANCE shall be maintained.

NOTE Examples of damage that can affect BASIC SAFETY include the reduction of CREEPAGE DISTANCES and AIR CLEARANCES below those specified in 8.9, access to parts which exceed limits in 8.4, or access to moving parts which could cause HARM.

Assessment criteria that can be useful in determining if this test has resulted in a loss of BASIC SAFETY include:

– those in Clause 8 and 11.6;

– the dielectric strength test as specified in 8.8.3 to evaluate the integrity of solid insulation providing a MEANS OF PROTECTION; and

– measurement of CREEPAGE DISTANCES or AIR CLEARANCES to compare the values with the minimum distances specified in 8.9. Small chips that do not adversely affect the protection against electric shock or moisture can normally be ignored.

9.4.3 * Instability from unwanted lateral movement (including sliding)

9.4.3.1 Instability in transport position

a) Brakes of power-driven MOBILE ME EQUIPMENT shall be designed so that they are normally activated and can only be released by continuous actuation of a control.

Compliance is checked by inspection.

b) MOBILE ME EQUIPMENt shall be fitted with means (such as locking devices) intended to prevent any unwanted movement of the ME EQUIPMENT or its parts in the transport position.

Compliance is checked by inspection.

c) * MOBILE ME EQUIPMENT shall be provided with wheel locks or with a braking system to prevent unwanted movement on an incline of 10° when in its transport position.

Compliance is checked by the following test:

Prior to the test, the ME EQUIPMENT is prepared as described in 9.4.2.1. The MOBILE ME EQUIPMENT is placed in its transport position (or in the worst case NORMAL USE position) with the SAFE WORKING LOAD in place, and the locking device (e.g. brakes) activated, on a hard flat surface inclined at 10° from the horizontal plane. If castors are incorporated, they are positioned in their worst-case position. Following the initial elastic movement, initial creepage, and initial pivoting of castors, any further movement of the MOBILE ME EQUIPMENT greater than 50 mm (in relation to the inclined plane) constitutes a failure.

9.4.3.2 Instability excluding transport position

a) MOBILE ME EQUIPMENT shall be provided with wheel locks or with a braking system to prevent unwanted movement on an incline of 5° when in any position excluding transport position.

Compliance is checked by the following test:

Prior to the test, the ME EQUIPMENT is prepared as described in 9.4.2.2. The MOBILE ME EQUIPMENT with the SAFE WORKING LOAD in place is positioned on a hard flat surface inclined at an angle of 5° from the horizontal plane with wheels locks on or braking system

Copyright International Electrotechnical Commission
Provided by IHS Markit under license with IEC
No reproduction or networking permitted without license from IHS Not for Resale, 08/26/2020 19:12:41 MDT

activated. Following the initial elastic movement, initial creepage, and initial pivoting of castors, any further movement of the ME EQUIPMENT greater than 50 mm (in relation to the inclined surface) constitutes a failure.

b) MOBILE ME EQUIPMENT shall be provided with wheel locks or with a braking system to prevent unwanted movement from lateral forces.

Compliance is checked by the following test:

Prior to the test, the ME EQUIPMENT is prepared as described in 9.4.2.2. The ME EQUIPMENT is placed on a horizontal plane with the SAFE WORKING LOAD in place, and the locking device (e.g. brakes) activated. If castors are incorporated, they are positioned in their worst-case position. A force equal to 15 % of the weight of the unit, but not more than 150 N, is applied in any direction, except a direction having an upwards component, at the highest point of the ME EQUIPMENT that does not lead to overbalancing but not exceeding 1,5 m from the floor. Following the initial elastic movement, initial creepage, and initial pivoting of castors, any further movement of the ME EQUIPMENT greater than 50 mm (in relation to the horizontal plane) constitutes a failure.

9.4.4 Grips and other handling devices

a) ME EQUIPMENT other than PORTABLE ME EQUIPMENT or its part with a mass of more than 20 kg that needs to be lifted in NORMAL USE or transport shall either be provided with suitable handling devices (for example handles, lifting eyes, etc.) or the ACCOMPANYING DOCUMENTS shall indicate the points where it can be lifted safely, unless the method of handling is obvious and no unacceptable RISK can develop when this is done. If the means for lifting are handles, they shall be suitably placed to enable the ME EQUIPMENT or its part to be carried by two or more persons.

Compliance is checked by weighing (if necessary) and by inspection of the ME EQUIPMENT or its part or the ACCOMPANYING DOCUMENTS.

b) ME EQUIPMENT specified by the MANUFACTURER as PORTABLE ME EQUIPMENT with a mass of more than 20 kg shall have one or more carrying-handles suitably placed to enable the ME EQUIPMENT to be carried by two or more persons.

Compliance is checked by carrying.

c) Carrying handles or grips furnished on PORTABLE ME EQUIPMENT shall withstand loading as described in the following test:

The handles and their means of attachment are subjected to a force equal to four times the weight of the ME EQUIPMENT in any direction of NORMAL USE and transport.

If more than one handle is furnished on PORTABLE ME EQUIPMENT, the force is distributed between the handles. The distribution of forces is determined by measuring the percentage of the ME EQUIPMENT weight sustained by each handle with the ME EQUIPMENT in the normal carrying position. If the ME EQUIPMENT is furnished with more than one handle but is so designed that it can readily be carried by only one handle, then each handle is to be capable of sustaining the total force.

The force is applied uniformly over a 7 cm length of the handle at the centre, starting at zero and gradually increasing so that the test value will be attained in 5 s to 10 s and maintained for a period of 1 min.

Handles that break loose from the ME EQUIPMENT or exhibit any permanent distortion, cracking or other evidence of breakdown constitutes a failure.

Copyright International Electrotechnical Commission
Provided by IHS Markit under license with IEC
No reproduction or networking permitted without license from IHS Not for Resale, 08/26/2020 19:12:41 MDT

9.5 * Expelled parts HAZARD

9.5.1 Protective means

Where expelled parts could result in an unacceptable RISK, the ME EQUIPMENT shall be provided with a means for protecting against such RISK.

Compliance is checked by assessment of the suitability of the protective means and by inspection of the RISK MANAGEMENT FILE.

9.5.2 Cathode ray tubes

Any cathode ray tube shall comply with the applicable requirements of IEC 60065:2001, Clause 18; or IEC 61965.

Compliance is checked by inspection of a certificate of compliance or by the relevant tests of IEC 60065:2001, Clause 18.

9.6 Acoustic energy (including infra- and ultrasound) and vibration

9.6.1 * General

ME EQUIPMENT shall be designed so that human exposure to acoustic energy and vibration shall not result in an unacceptable RISK.

Compliance is checked by the tests in 9.6.2 and 9.6.3, and, if necessary, by inspection of the RISK MANAGEMENT FILE (taking into account the audibility of auditory alarm signals and PATIENT sensitivity).

9.6.2 * Acoustic energy

9.6.2.1 Audible acoustic energy

In NORMAL USE, the PATIENT, OPERATOR and other persons shall not be exposed to acoustic energy from ME EQUIPMENT, except sound from auditory ALARM SIGNALS, exceeding the levels specified below.

– 80 dBA for a cumulative exposure of 24 h over a 24 h period; an offset of 3 dBA is to be added to this value when halving the cumulative exposure time over a 24 h period (e.g. 83 dBA for 12 h over a 24 h period);

– 140 dBC (peak) sound pressure level for impulsive or impact acoustic energy (noise).

NOTE 1 Interpolation or extrapolation is allowed for exposure times in accordance with the following formula, $80 - 10 * \log_{10}(h/24)$, in dBA, where h is cumulative exposure time over a 24 h period.

NOTE 2 Since PATIENTS might have a higher sensitivity to acoustic energy (noise), a lower level could be more appropriate. Consideration should also be given to perception of auditory ALARM SIGNALS. The World Health Organization has recommended a maximum impulse or impact acoustic energy (noise) level for children of 120 dB.

NOTE 3 If the A-weighted sound pressure level exceeds 80 dBA, noise protection measure should be considered.

NOTE 4 Acoustic energy directly associated with the INTENDED USE of the ME EQUIPMENT or ME SYSTEMS is excluded. See subclauses 1.1 and 7.2.13.

Compliance is checked by measuring the maximum A-weighted sound pressure level at the minimum distances of PATIENT, OPERATOR and other persons from the source of acoustic energy (*noise) in NORMAL USE, and if necessary, calculating the A-weighted sound pressure level produced by the ME EQUIPMENT in accordance with ISO 3746, ISO 9614-1 or IEC 61672-1. The following conditions apply.*

a) The ME EQUIPMENT is operated under worst-case NORMAL CONDITION.

b) Any protective means provided or called for in ACCOMPANYING DOCUMENTS are to be in place during sound measurement.

c) Sound level meters used in the measurement conform to IEC 61672-1 and IEC 61672-2.

Copyright International Electrotechnical Commission
Provided by IHS Markit under license with IEC
No reproduction or networking permitted without license from IHS Not for Resale, 08/26/2020 19:12:41 MDT

d) The test room is semi-reverberant with a hard reflecting floor. The distance between any wall or other object and the surface of the ME EQUIPMENT is not less than 3 m.

e) When sound measurements in a test room are not feasible (e.g. for a large PERMANENTLY INSTALLED ME EQUIPMENT), measurements may be done in situ.

9.6.2.2 Infrasound and ultrasound energy

When applicable, the MANUFACTURER shall address the RISKS associated with infrasound or ultrasound in the RISK MANAGEMENT PROCESS.

Compliance is checked by inspection of the RISK MANAGEMENT FILE.

9.6.3 * Hand-transmitted vibration

Except for vibrations directly required to carry out the INTENDED USE of the ME EQUIPMENT, means shall be provided to protect the PATIENT, OPERATOR and other persons if in NORMAL USE the hand-transmitted frequency-weighted r.m.s. acceleration generated by the ME EQUIPMENT exceeds the value below:

– 2,5 m/s^2 for a cumulative time of 8 h during a 24 h period.

– Allowable accelerations for different times are inversely proportional to the square root of the time (e.g. the allowable acceleration for 2 h would be 5,0 m/s^2).

NOTE Interpolation or extrapolation is allowed for allowable acceleration in accordance with the following formula, $2{,}5 \times \sqrt{(8 / t)}$, in m/s^2, where t is the cumulative time over a 24 h period.

Compliance is checked by measurements at points of equipment in hand contact with PATIENT, OPERATOR or other persons. Measurements are made in accordance with ISO 5349-1.

9.7 * Pressure vessels and parts subject to pneumatic and hydraulic pressure

9.7.1 General

The requirements of this subclause apply to vessels and parts of ME EQUIPMENT subject to pressure, the rupture of which could result in an unacceptable RISK.

The parts of a pneumatic or hydraulic system that are used as a support system shall additionally comply with the requirements in 9.8.

9.7.2 Pneumatic and hydraulic parts

Pneumatic and hydraulic parts of ME EQUIPMENT or ACCESSORIES shall be so designed that:

– no unacceptable RISK results from loss of pressure or loss of vacuum;

– no unacceptable RISK results from a fluid jet caused by leakage or a component failure;

– elements of the ME EQUIPMENT or an ACCESSORY, and especially pipes and hoses, that can lead to an unacceptable RISK shall be protected against harmful external effects;

– reservoirs and similar vessels (e.g. hydro-pneumatic accumulators) that can lead to an unacceptable RISK are automatically depressurized when the ME EQUIPMENT is isolated from its power supply (e.g. pulling out the pneumatic plug at the connector mounted on the facility wall). If this is not possible, means shall be provided for the isolation (e.g. cutting off from the peripheral circuit), or local depressurizing of reservoirs and similar vessels, and pressure indication;

– all elements that can remain under pressure after isolation of the ME EQUIPMENT or an ACCESSORY from its power supply and that could result in an unacceptable RISK shall be provided with clearly identified exhaust devices, and a warning label drawing attention to the necessity of depressurizing these elements before any setting or maintenance activity on the ME EQUIPMENT or ACCESSORIES.

Compliance is checked by inspection and examination of RISK MANAGEMENT FILE.

Copyright International Electrotechnical Commission
Provided by IHS Markit under license with IEC
No reproduction or networking permitted without license from IHS Not for Resale, 08/26/2020 19:12:41 MDT

9.7.3 Void

9.7.4 Pressure rating of ME EQUIPMENT parts

The MAXIMUM PERMISSIBLE WORKING PRESSURE for the part, except as allowed for pressure relief devices in 9.7.7.

Compliance is checked by inspection of the MANUFACTURER'S data for the component, inspection of the ME EQUIPMENT, and where necessary, by functional test.

9.7.5 * Pressure vessels

A pressure vessel shall withstand a HYDRAULIC TEST PRESSURE if both the following conditions are met:

– the MAXIMUM EQUIPMENT PRESSURE is greater than 50 kPa; and

– the product of MAXIMUM EQUIPMENT PRESSURE and volume is greater than 200 kPa · l.

Compliance is checked by the following tests:

The HYDRAULIC TEST PRESSURE is the MAXIMUM EQUIPMENT PRESSURE multiplied by a factor obtained from Figure 32.

The pressure is raised gradually to the specified test value and is held at that value for 1 min. A sample that bursts or suffers from permanent (plastic) deformation or leaks constitutes a failure. Leakage at a gasket during this test is not considered to constitute failure unless it occurs at a pressure below 40 % of the required test value, or below the MAXIMUM EQUIPMENT PRESSURE, whichever is greater.

No leakage is allowed for pressure vessels intended for toxic, flammable or otherwise hazardous substances. For other pressure vessels, no leakage is allowed that will otherwise result in an unacceptable RISK (e.g. high pressure fluid jet).

Where unmarked pressure vessels and pipes (e.g. those with no national certification) cannot be hydraulically tested, integrity is verified by other suitable tests, e.g. pneumatic using suitable media, at the same test pressure as for the hydraulic test.

Copyright International Electrotechnical Commission
Provided by IHS Markit under license with IEC
No reproduction or networking permitted without license from IHS Not for Resale, 08/26/2020 19:12:41 MDT

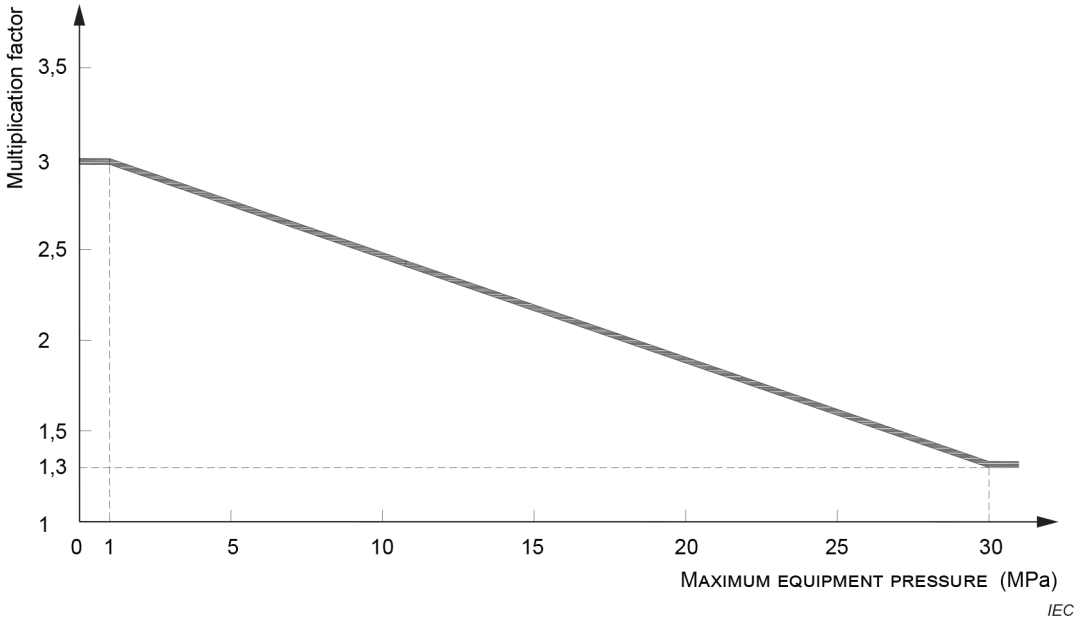

Figure 32 – Ratio between HYDRAULIC TEST PRESSURE and MAXIMUM EQUIPMENT PRESSURE
(see 9.7.5)

9.7.6 Pressure-control device

In ME EQUIPMENT for which 9.7.7 requires a pressure-relief device, any pressure-control device responsible for regulating the pressure shall be capable of performing under RATED load for 100 000 cycles of operation and shall prevent the pressure from exceeding 90 % of the setting of the pressure-relief device under any condition of NORMAL USE.

Compliance is checked by inspection of the MANUFACTURER'S data for the component, inspection of the ME EQUIPMENT, and where necessary, by functional test.

NOTE When applicable, ISO 10524-1:2018 [80] can be a suitable component standard (see 4.8).

9.7.7 Pressure-relief device

ME EQUIPMENT shall incorporate pressure-relief device(s) where the MAXIMUM PERMISSIBLE WORKING PRESSURE could otherwise be exceeded.

A pressure-relief device shall comply with all of the following requirements:

a) it shall be connected as close as reasonably practical to the pressure vessel or parts of the system that it is intended to protect;

b) it shall be so installed that it is readily accessible for inspection, maintenance and repair;

c) it shall not be capable of being adjusted or rendered inoperative without the use of a TOOL;

d) it shall have its discharge opening so located and directed that the released material is not directed towards any person;

e) it shall have its discharge opening so located and directed that operation of the device will not deposit material on parts that could result in an unacceptable RISK;

f) it shall be of adequate discharge capacity to ensure that the pressure will not exceed the MAXIMUM EQUIPMENT PRESSURE of the system to which it is connected by more than 10 % in the event of a failure in the control of the supply pressure;

Copyright International Electrotechnical Commission
Provided by IHS Markit under license with IEC
No reproduction or networking permitted without license from IHS Not for Resale, 08/26/2020 19:12:41 MDT

g) there shall be no shut-off valve between a pressure-relief device and the parts that it is intended to protect;

h) the minimum number of cycles of operation shall be 100 000, except for one-time use devices such as bursting disks.

Compliance is checked by inspection of the MANUFACTURER'S data for the component, inspection of the ME EQUIPMENT, inspection of the RISK MANAGEMENT FILE, and where necessary, by functional test.

9.7.8 RATED maximum supply pressure

See 7.2.18.

9.8 * MECHANICAL HAZARDS associated with support systems

9.8.1 General

Where ME EQUIPMENT parts are designed to support loads or to provide actuating forces, the following requirements shall be applied if a mechanical fault could constitute an unacceptable RISK.

– The construction of the support, suspension or actuation system shall be designed based upon Table 21 and the TOTAL LOAD.

– Means of attachment of ACCESSORIES shall be designed such that any possibility of incorrect attachment that could result in an unacceptable RISK is avoided.

– The RISK ANALYSIS of support systems shall consider MECHANICAL HAZARDS arising from static, dynamic, vibration, impact and pressure loading, foundation and other movements, temperature, environmental, manufacture and service conditions.

– All likely failure effects shall be considered in the RISK ANALYSIS. These include excessive deflection, plastic deformation, ductile or brittle fracture, fatigue fracture, instability (buckling), stress-assisted corrosion cracking, wear, material creep, material deterioration and residual stresses resulting from the manufacturing PROCESSES, e.g. machining, assembling, welding, heat treatment or surface coating.

– The ACCOMPANYING DOCUMENTS shall contain instructions on attachment of structures to a floor, wall, ceiling, etc. making adequate allowances for quality of the materials used to make the connection and shall list the required materials. Additionally there shall be advice on checking the adequacy of the surface of the structure to which the parts will be attached.

9.8.2 * TENSILE SAFETY FACTOR

Support systems shall maintain structural integrity during the EXPECTED SERVICE LIFE of the ME EQUIPMENT. TENSILE SAFETY FACTORS shall not be less than those shown in Table 21 unless an alternative method demonstrates structural integrity throughout the EXPECTED SERVICE LIFE of the ME EQUIPMENT, or the support is a foot rest. The requirements for foot rests are in 9.8.3.2 a).

Table 21 – Determination of TENSILE SAFETY FACTOR

Situation			Minimum TENSILE SAFETY FACTOR [a]	
No.	System Part	Elongation	A [b]	B [c]

Copyright International Electrotechnical Commission
Provided by IHS Markit under license with IEC
No reproduction or networking permitted without license from IHS
Not for Resale, 08/26/2020 19:12:41 MDT

1	Support system parts not impaired by wear	Metallic material [d] having a specific elongation at break equal to or greater than 5 %	2,5	4
2	Support system parts not impaired by wear	Metallic material [d] having a specific elongation at break of less than 5 %	4	6
3	Support system parts impaired by wear [e] and no MECHANICAL PROTECTIVE DEVICE	Metallic material [d] having a specific elongation at break equal to or greater than 5 %	5	8
4	Support system parts impaired by wear [e] and no MECHANICAL PROTECTIVE DEVICE	Metallic material [d] having a specific elongation at break of less than 5 %	8	12
5	Support system parts impaired by wear [e] and with MECHANICAL PROTECTIVE DEVICE (or primary system of multiple support systems)	Metallic material [d] having a specific elongation at break equal to or greater than 5 %	2,5	4
6	Support system parts impaired by wear [e] and with MECHANICAL PROTECTIVE DEVICE (or primary system of multiple support systems)	Metallic material [d] having a specific elongation at break of less than 5 %	4	6
7	MECHANICAL PROTECTIVE DEVICE (or back-up system of multiple support system)	Metallic material [d] having a specific elongation at break equal to or greater than 5 % is assumed (see rationale in Annex A, subclause 9.8.4).	2,5	4

[a] The TENSILE SAFETY FACTORS are intended to take account of conditions defined in 15.3.7 (i.e. environmental effects, impairing effects of wear, corrosion, material fatigue or ageing).

[b] Case A = The material TENSILE STRENGTH and all external forces to be expected are quantifiable and known accurately.

[c] Case B = Other than case A; specifically, the material TENSILE STRENGTH and all external forces to be expected are known approximately, but not with sufficient accuracy to justify the TENSILE SAFETY FACTOR for case A.

[d] For non-metallic materials, particular standards can prescribe adequate TENSILE SAFETY FACTORS (see rationale in Annex A, Subclause 9.8).

[e] Components considered impaired by wear include: chains, cables (wire rope), belts, jack screw nuts, springs, pneumatic or hydraulic hoses, gaskets or rings of pneumatic or hydraulic pistons.

Compliance with 9.8.1 and 9.8.2 is checked by inspection of the ME EQUIPMENT, the RISK MANAGEMENT FILE, the specifications of materials used and the processing specifications for these materials.

If testing is needed to demonstrate compliance with 9.8.1 or 9.8.2, a test load equal to the TOTAL LOAD times the required TENSILE SAFETY FACTOR is gradually applied to the support assembly under test. The support assembly under test is to be in equilibrium after 1 min, or otherwise not result in an unacceptable RISK.

NOTE 1 It might be necessary to support assemblies that are connected to the assembly under test but do not require such a high safety factor, e.g. assembly under test requires TENSILE SAFETY FACTOR = 8 and assembly supporting it is designed with a TENSILE SAFETY FACTOR = 4. Use of additional support should be explained in the test report.

NOTE 2 The 1 min time period might need to be longer for materials which might have creep type problems, such as plastics or other non-metallic materials.

9.8.3 * Strength of PATIENT or OPERATOR support or suspension systems

9.8.3.1 General

ME EQUIPMENT parts serving for support or immobilization of PATIENTS shall be designed and manufactured so there is no unacceptable RISK of physical injuries or of accidental loosening of fixings.

Copyright International Electrotechnical Commission
Provided by IHS Markit under license with IEC
No reproduction or networking permitted without license from IHS Not for Resale, 08/26/2020 19:12:41 MDT

The SAFE WORKING LOAD of ME EQUIPMENT or its parts serving for support or suspension of PATIENTS or OPERATORS shall be the sum of the mass of the PATIENTS or the mass of the OPERATORS plus the mass of ACCESSORIES intended by MANUFACTURERS to be supported or suspended by the ME EQUIPMENT or ME EQUIPMENT parts.

Unless otherwise stated by the MANUFACTURER, supporting and suspending parts for adult human PATIENTS or OPERATORS shall be designed for a PATIENT or OPERATOR having a minimum mass of 135 kg and ACCESSORIES having a minimum mass of 15 kg.

Where a MANUFACTURER specifies particular applications (e.g. paediatric use), the maximum mass of the PATIENT included in the SAFE WORKING LOAD of the ME EQUIPMENT or its parts serving for support or suspension of PATIENTS may be adapted. When the maximum allowable value of the mass of the PATIENT is less than 135 kg, that value shall be marked on the ME EQUIPMENT and described in ACCOMPANYING DOCUMENTS. When the maximum allowable value of the mass of the PATIENT is more than 135 kg, that value shall be described in ACCOMPANYING DOCUMENTS.

Compliance is checked by inspection of the ME EQUIPMENT (including markings), the ACCOMPANYING DOCUMENTS, the MANUFACTURER'S data for the component, the RISK MANAGEMENT FILE, and, where necessary, functional test.

9.8.3.2 * Static forces due to loading from persons

In analyzing loading forces and torques on support assemblies, the part of the SAFE WORKING LOAD representing the mass of the PATIENTS or OPERATORS is distributed on the support/suspension surface in a manner representing the human body (see the example in Figure A.19).

NOTE 1 The position of the human body varies depending on the configuration of the support/suspension system and therefore the load acting on different sections will vary and should be taken into account.

In analyzing loading forces and torques on support assemblies, the part of the SAFE WORKING LOAD representing the mass of ACCESSORIES shall be deployed as in NORMAL USE or, if not defined, at the worst case position permitted by the configuration or ACCESSORIES attachment on the support/suspension parts.

a) For a foot rest that is intended to temporarily support a standing PATIENT or OPERATOR, the whole mass of the PATIENT or OPERATOR is distributed over an area of 0,1 m^2.

   Compliance is checked by inspection of the ME EQUIPMENT, the specifications of materials used and the processing specifications for these materials, and the following test:

   Prior to performing these tests, the PATIENT support/suspension system is positioned horizontally in its most disadvantageous position in NORMAL USE.

   A mass equal to two times 135 kg or two times the intended person load, whichever is greater is applied to the foot rest over an area of 0,1 m^2 for 1 min. After the test, a foot rest and its fixings that shows any damage or permanent deflection from normal greater than 5° constitutes a failure. BASIC SAFETY and ESSENTIAL PERFORMANCE shall be maintained.

   NOTE 2 Examples of damage that can affect BASIC SAFETY include the reduction of CREEPAGE DISTANCES and AIR CLEARANCES below those specified in 8.9, access to parts that exceed limits in 8.4, or access to moving parts that could cause HARM.

   Assessment criteria that can be useful in determining if this test has resulted in a loss of BASIC SAFETY include:

   – those in Clause 8 and 11.6;
   – the dielectric strength test as specified in 8.8.3 to evaluate the integrity of solid insulation providing a MEANS OF PROTECTION; and
   – measurement of CREEPAGE DISTANCES or AIR CLEARANCES to compare the values with the minimum distances specified in 8.9. Small chips that do not adversely affect the protection against electric shock or moisture can normally be ignored.

b) For an area of support/suspension where a PATIENT or OPERATOR can sit, deflection of a support surface from PATIENT or OPERATOR loading shall not result in an unacceptable RISK.

Copyright International Electrotechnical Commission
Provided by IHS Markit under license with IEC
No reproduction or networking permitted without license from IHS Not for Resale, 08/26/2020 19:12:41 MDT

Compliance is checked by inspection of the ME EQUIPMENT, the specifications of materials used and the processing specifications for these materials, and the following test:

Prior to performing these tests, the PATIENT support/suspension system is positioned horizontally in its most disadvantageous position in NORMAL USE.

A mass of 60 % of the part of the SAFE WORKING LOAD representing the PATIENT or OPERATOR, as defined in the instructions for use, or a minimum 80 kg, is placed on the support/suspension system with the centre of the load 60 mm from the outer edge of the support/suspension system for at least one minute. Any permanent deflection of the support/suspension system from normal greater than 5° constitutes a failure. BASIC SAFETY and *ESSENTIAL PERFORMANCE shall be maintained*.

NOTE 3 Examples of damage that can affect BASIC SAFETY include the reduction of CREEPAGE DISTANCES and AIR CLEARANCES below those specified in 8.9, access to parts that exceed limits in 8.4, or access to moving parts that could cause HARM.

Assessment criteria that can be useful in determining if this test has resulted in a loss of BASIC SAFETY include:

– those in Clause 8 and 11.6;

– the dielectric strength test as specified in 8.8.3 to evaluate the integrity of solid insulation providing a MEANS OF PROTECTION; and

– measurement of CREEPAGE DISTANCES or AIR CLEARANCES to compare the values with the minimum distances specified in 8.9. Small chips that do not adversely affect the protection against electric shock or moisture can normally be ignored.

9.8.3.3 * Dynamic forces due to loading from persons

Where dynamic forces (due to sitting down, standing up, PATIENT handling PROCESS or the like) can be exerted on ME equipment parts intended to support or suspend a PATIENT or OPERATOR in NORMAL USE, the ME EQUIPMENT shall maintain BASIC SAFETY and ESSENTIAL PERFORMANCE.

Compliance is checked by the following test:

Prior to performing this test, the PATIENT support/suspension system is positioned horizontally in its most disadvantageous position in NORMAL USE.

For the area of support/suspension where a PATIENT or OPERATOR can sit, the top reservoir of the body upper-carriage module described in Figure 33 is loaded with the appropriate mass to obtain the SAFE WORKING LOAD representing the PATIENT or OPERATOR as defined in the ACCOMPANYING DOCUMENTS. The body upper-carriage module with appropriate mass is dropped from a distance of 150 mm from the lowest edge of the foam to the area where a PATIENT or OPERATOR can sit. BASIC SAFETY and ESSENTIAL PERFORMANCE shall be maintained.

NOTE Examples of damage that can affect BASIC SAFETY include the reduction of CREEPAGE DISTANCES and AIR CLEARANCES below those specified in 8.9, access to parts that exceed limits in 8.4, or access to moving parts which could cause HARM.

Assessment criteria that can be useful in determining if this test has resulted in a loss of BASIC SAFETY include:

– those in Clause 8 and 11.6;

– the dielectric strength test as specified in 8.8.3 to evaluate the integrity of solid providing a MEANS OF PROTECTION; and

– measurement of CREEPAGE DISTANCES or AIR CLEARANCES to compare the values with the minimum distances specified in 8.9. Small chips that do not adversely affect the protection against electric shock or moisture can normally be ignored.

9.8.4 * Systems with MECHANICAL PROTECTIVE DEVICES

9.8.4.1 General

a) A MECHANICAL PROTECTIVE DEVICE shall be provided when a support system or any of its parts impaired by wear have a TENSILE SAFETY FACTOR greater than or equal to the values specified in rows 5 and 6 but less than those in rows 3 and 4 of Table 21.

Copyright International Electrotechnical Commission
Provided by IHS Markit under license with IEC
No reproduction or networking permitted without license from IHS Not for Resale, 08/26/2020 19:12:41 MDT

b) The MECHANICAL PROTECTIVE DEVICE shall:

- be designed on the basis of TOTAL LOAD, which shall include the effects of the SAFE WORKING LOAD when applicable;
- have TENSILE SAFETY FACTORS for all parts not less than those in row 7 of Table 21;
- activate before travel (movement) produces an unacceptable RISK;
- take into account 9.2.5 and 9.8.4.3.

Compliance is checked by the following as necessary:

- *inspection of the overtravel (stopping distance from the time of engagement of the MECHANICAL PROTECTIVE DEVICE to the time of no further movement) calculations and evaluation;*
- *any functional tests*.

NOTE The overtravel (stopping distance from the time of engagement of the MECHANICAL PROTECTIVE DEVICE to the time of no further movement) calculations and evaluation are part of the RISK MANAGEMENT FILE.

Dimensions in millimetres

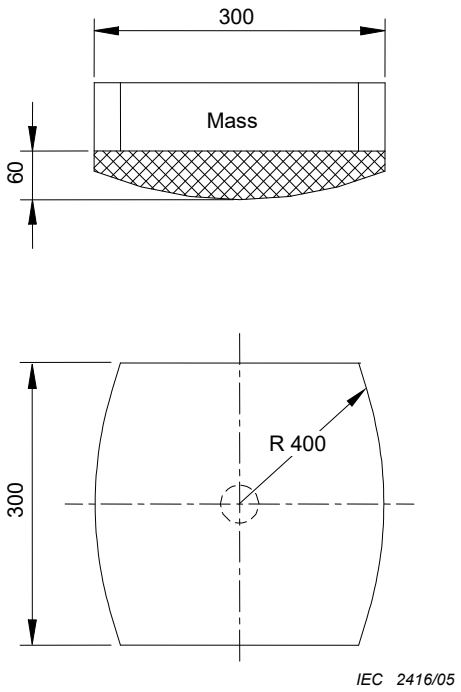

NOTE The top reservoir of the body upper-carriage module is formed of wood, metal or a similar material. The reservoir is intended to retain the appropriate human body mass, typically with high density material (e.g. lead). The bottom portion is foam. The resiliency or spring factor of the foam (ILD or IFD ratings) is not specified, as with a large mass being dropped, the foam properties are likely inconsequential. The foam is cylindrical, rather than spherical.

Figure 33 – Body upper-carriage module

9.8.4.2 Use after activation of a MECHANICAL PROTECTIVE DEVICE

If ME EQUIPMENT can still be used after failure of the suspension or actuation means and activation of a MECHANICAL PROTECTIVE DEVICE such as a secondary cable (wire rope), it shall become obvious to the OPERATOR that the MECHANICAL PROTECTIVE DEVICE has been activated.

The MECHANICAL PROTECTIVE DEVICE shall require the use of a TOOL to be reset or replaced.

Compliance is checked by inspection of the ME EQUIPMENT.

Copyright International Electrotechnical Commission
Provided by IHS Markit under license with IEC
No reproduction or networking permitted without license from IHS Not for Resale, 08/26/2020 19:12:41 MDT

9.8.4.3 MECHANICAL PROTECTIVE DEVICE intended for single activation

If a MECHANICAL PROTECTIVE DEVICE is intended to function only once, the following requirements shall be fulfilled:

– Further use of the ME EQUIPMENT shall be impossible until the MECHANICAL PROTECTIVE DEVICE has been replaced.

– The ACCOMPANYING DOCUMENTS shall instruct that once the MECHANICAL PROTECTIVE DEVICE has been activated, SERVICE PERSONNEL are to be called, and the MECHANICAL PROTECTIVE DEVICE must be replaced before the ME EQUIPMENT can be used again.

– The ME EQUIPMENT shall be permanently marked with SAFETY SIGN ISO 7010-W001 (see Table D.2, SAFETY SIGN 2).

– The marking shall be adjacent to the MECHANICAL PROTECTIVE DEVICE or so located that its relation to the MECHANICAL PROTECTIVE DEVICE is obvious to the person performing service or repair.

NOTE See also 15.3.7.

Compliance is checked as follows:

– *by inspection of the ME EQUIPMENT, the ACCOMPANYING DOCUMENTS and the specifications of materials used and the processing specifications for these materials;*

– *a chain, cable (wire rope), band, spring, belt, jack screw nut, pneumatic or hydraulic hose, structural part or the like, employed to support a load, is defeated (to test the MECHANICAL PROTECTIVE DEVICE) by any convenient means, thereby causing the maximum normal load to fall from the most adverse position permitted by the construction of the ME EQUIPMENT. If the system supports a PATIENT or OPERATOR, the load is to include the SAFE WORKING LOAD defined in 9.8.3.1.*

Any evidence of damage to a MECHANICAL PROTECTIVE DEVICE that would affect its ability to perform its intended function constitutes a failure.

9.8.5 Systems without MECHANICAL PROTECTIVE DEVICES

A MECHANICAL PROTECTIVE DEVICE is not required if:

– the support system parts are not impaired by wear and have TENSILE SAFETY FACTORS greater than or equal to the values specified in rows 1 and 2 of Table 21; or

– the support system parts are impaired by wear but have TENSILE SAFETY FACTORS greater than or equal to the values specified in rows 3 and 4 of Table 21.

Compliance is checked by inspection of the ME EQUIPMENT, the design documentation and the RISK MANAGEMENT FILE.

10 * Protection against unwanted and excessive radiation HAZARDS

10.1 X-Radiation

10.1.1 * ME EQUIPMENT not intended to produce diagnostic or therapeutic X-radiation

For ME EQUIPMENT not intended to produce X-radiation for diagnostic or therapeutic purposes, but which might produce ionizing radiation, the AIR KERMA rate shall not exceed 5 μGy/h at a distance of 5 cm from a surface of the ME EQUIPMENT taking account of the background radiation.

If the INTENDED USE of the ME EQUIPMENT requires a permanent proximity to a PATIENT, the resulting annual exposure should be made acceptable taking into account the irradiated body part and national regulations and/or international recommendations.

NOTE 1 The dose-rate value appears in ICRP 60 [39].

NOTE 2 In the member countries of CENELEC, the amount of ionizing radiation is regulated by European Council Directive 96/29/Euratom of 13 May 1996. This Directive requires that at any point 10 cm from the surface of the equipment, the dose-rate shall not exceed 1 μSv/h (0,1 mR/h) taking account of the background level.

Copyright International Electrotechnical Commission
Provided by IHS Markit under license with IEC
No reproduction or networking permitted without license from IHS Not for Resale, 08/26/2020 19:12:41 MDT

Compliance is checked by following test:

The amount of radiation is determined by means of a radiation monitor of the ionizing chamber type with an effective area of 10 cm² or by measuring equipment of other types giving equivalent results.

The ME EQUIPMENT is operated at the most unfavourable RATED MAINS VOLTAGE and with any controls adjusted so as to give maximum radiation whilst maintaining the ME EQUIPMENT in NORMAL USE.

Internal preset controls not intended to be adjusted during the EXPECTED SERVICE LIFE of the ME EQUIPMENT are not considered.

Measurements are made at a distance of 5 cm from any surface to which OPERATORS other than SERVICE PERSONNEL:

– *can gain access without the use of a TOOL;*
– *is deliberately provided with the means of access; or*
– *is instructed to enter regardless of whether or not a TOOL is needed to gain access.*

Any measurement exceeding 5 μGy/h adjusted for the level of background radiation constitutes a failure.

NOTE 3 This test PROCEDURE is equivalent to that in IEC 60950-1:2005, Annex H or to IEC 62368-1:2018, 10.5.3.

10.1.2 ME EQUIPMENT intended to produce diagnostic or therapeutic X-radiation

Unintended X-radiation from ME EQUIPMENT designed to produce diagnostic or therapeutic X-radiation shall be reduced as far as possible by application of applicable particular and collateral standards, or in the absence of these standards by application of the RISK MANAGEMENT PROCESS.

For intended X-radiation, also see 12.4.5.2 and 12.4.5.3.

Compliance is checked by application of applicable particular and collateral standards or inspection of the RISK MANAGEMENT FILE.

10.2 Alpha, beta, gamma, neutron and other particle radiation

When applicable, the MANUFACTURER shall address in the RISK MANAGEMENT PROCESS the RISKS associated with alpha, beta, gamma, neutron and other particle radiation.

Compliance is checked by inspection of the RISK MANAGEMENT FILE.

10.3 Microwave radiation

The power density of unintended microwave radiation at frequencies between 1 GHz and 100 GHz shall not exceed 10 W/m² at any point 50 mm away from a surface of the ME EQUIPMENT under reference test conditions. This requirement does not apply to parts of the apparatus where microwave radiation is propagated intentionally, for example, at waveguide output ports.

NOTE This requirement is equivalent to that in subclause 12.4 of IEC 61010-1:2001.

Compliance is checked by review of MANUFACTURER'S calculations and, if necessary, the following test:

The ME EQUIPMENT is operated at the most unfavourable RATED MAINS VOLTAGE and with any control adjusted so as to give maximum microwave radiation whilst maintaining the ME EQUIPMENT in NORMAL USE.

Internal pre-set controls not intended to be adjusted during the expected SERVICE LIFE of the ME EQUIPMENT are not considered.

Copyright International Electrotechnical Commission
Provided by IHS Markit under license with IEC
No reproduction or networking permitted without license from IHS Not for Resale, 08/26/2020 19:12:41 MDT

Measurements are made at a distance of 50 mm from any surface to which OPERATORS *other than* SERVICE PERSONNEL*:*

– *can gain access without the use of a* TOOL*;*

– *are deliberately provided with the means of access; or*

– *are instructed to enter regardless of whether or not a* TOOL *is needed to gain access.*

Any measurement exceeding 10 W/m² under reference test conditions constitutes a failure.

10.4 * Lasers

For lasers, including laser diodes, that produce or amplify electromagnetic radiation in the wavelength range from 180 nm to 1 mm, the relevant requirements of IEC 60825-1:2014 shall apply. If laser light barriers or similar products are used within equipment, they shall comply with the requirements of IEC 60825-1:2014.

NOTE For laser equipment that is intended for use on humans or animals for surgical, therapeutic, medical diagnostic, cosmetic, or veterinary applications and classified as a Class 3b or Class 4 laser product as defined in IEC 60825-1:2014, see also IEC 60601-2-22 [59].

Compliance is checked by following the relevant PROCEDURES *of IEC 60825-1:2007.*

10.5 * Other visible electromagnetic radiation

When applicable, the MANUFACTURER shall address in the RISK MANAGEMENT PROCESS the RISKS associated with visible electromagnetic radiation, other than that produced by lasers (see 10.4).

Compliance is checked by inspection of the RISK MANAGEMENT FILE*.*

10.6 * Infrared radiation

When applicable, the MANUFACTURER shall address in the RISK MANAGEMENT PROCESS the RISKS associated with infrared radiation, other than that produced by lasers (see 10.4).

Compliance is checked by inspection of the RISK MANAGEMENT FILE*.*

10.7 * Ultraviolet radiation

When applicable, the MANUFACTURER shall address in the RISK MANAGEMENT PROCESS the RISKS associated with ultraviolet radiation, other than that produced by lasers (see 10.4).

Compliance is checked by inspection of the RISK MANAGEMENT FILE*.*

11 Protection against excessive temperatures and other HAZARDS

11.1 * Excessive temperatures in ME EQUIPMENT

11.1.1 * Maximum temperature during NORMAL USE

When ME EQUIPMENT is operated in worst-case NORMAL USE including the maximum ambient operating temperature specified in the technical description (see 7.9.3.1):

– ME EQUIPMENT parts shall not reach temperatures exceeding the values given in Table 22 and Table 23;

NOTE Also see the information in 13.1.2 when applying SINGLE FAULT CONDITIONS.

– the ME EQUIPMENT shall not cause the surfaces of the test corner to exceed 90 °C; and

– THERMAL CUT-OUTS shall not operate in NORMAL CONDITION.

--`,,```,,,,````-`-`,,`,,`,`,,`---

Copyright International Electrotechnical Commission
Provided by IHS Markit under license with IEC
No reproduction or networking permitted without license from IHS Not for Resale, 08/26/2020 19:12:41 MDT

Table 22 – Allowable maximum temperatures of parts

Parts	Maximum Temperature °C
Insulation, including winding insulation [a]	
- of Class A Material	105
- of Class E Material	120
- of Class B Material	130
- of Class F Material	155
- of Class H Material	180
Parts with T marking	T [b]
Other components and materials	[c]
Parts in contact with flammable liquid with flash-point of T °C	T-25
Wood	90

[a] The classification of insulating materials is in accordance with IEC 60085. Any incompatibility of the materials of an insulating system that could reduce the maximum temperature limit of the system below the limits of the individual materials shall be considered.

[b] T marking refers to the marked maximum operating temperature.

[c] For each material and component, account shall be taken of the temperature ratings for each material or component to determine the appropriate maximum temperature. Each component shall be used in accordance with its temperature rating. Where doubt exists, the ball pressure test of 8.8.4.1 should be performed.

Table 23 – Allowable maximum temperatures for ACCESSIBLE PARTS that are likely to be touched

ACCESSIBLE PARTS		Maximum temperature [a] °C		
		Metal and liquids	Glass, porcelain, vitreous material	Moulded material, plastic, rubber, wood
External surfaces of ACCESSIBLE PARTS that are likely to be touched for a time "*t*"	*t* < 1 s	74	80	86
	1 s ≤ *t* < 10 s	56	66	71
	10 s ≤ *t* < 1 min	51	56	60
	1 min ≤ *t*	48	48	48

[a] These temperature limit values are applicable for touching the healthy skin of adults. They are not applicable when large areas of the skin (10 % of total body surface or more) can be in contact with a hot surface. This also applies in the case of skin contact with over 10 % of the head surface. Where this is the case, appropriate limits shall be determined and documented in the RISK MANAGEMENT FILE.

Copyright International Electrotechnical Commission
Provided by IHS Markit under license with IEC
No reproduction or networking permitted without license from IHS
Not for Resale, 08/26/2020 19:12:41 MDT

Table 24 – Allowable maximum temperatures for skin contact with ME EQUIPMENT APPLIED PARTS

APPLIED PARTS of ME EQUIPMENT		Maximum temperature [a] [b] °C		
		Metal and liquids	Glass, porcelain, vitreous material	Moulded material, plastic, rubber, wood
APPLIED PART having contact with the PATIENT for a time "*t*"	*t* < 1 min	51	56	60
	1 min ≤ *t* < 10 min	48	48	48
	10 min ≤ *t*	43	43	43

[a] These temperature limit values are applicable for the healthy skin of adults. They are not applicable when large areas of the skin (10 % of total body surface or more) can be in contact with a hot surface. They are not applicable in the case of skin contact with over 10 % of the head surface. Where this is the case, appropriate limits shall be determined and documented in the RISK MANAGEMENT FILE.

[b] Where it is necessary for APPLIED PARTS to exceed the temperature limits of Table 24 in order to provide clinical benefit, the RISK MANAGEMENT FILE shall contain documentation showing that the resulting benefit exceeds any associated increase in RISK.

11.1.2 * Temperature of APPLIED PARTS

11.1.2.1 APPLIED PARTS intended to supply heat to a PATIENT

The temperature (hot or cold surfaces) or (where appropriate) the clinical effects shall be determined and documented in the RISK MANAGEMENT FILE. The temperatures and clinical effects shall be disclosed in the instructions for use.

11.1.2.2 * APPLIED PARTS not intended to supply heat to a PATIENT

The limits of Table 24 shall apply in both NORMAL CONDITION and SINGLE FAULT CONDITION. If the surface temperature of an APPLIED PART exceeds 41 °C:

– the maximum temperature shall be disclosed in the instructions for use;

– the conditions for safe contact, e.g. duration or condition of the PATIENT, shall be disclosed; and

– the clinical effects with respect to characteristics such as body surface, maturity of PATIENTS, medications being taken or surface pressure shall be determined and documented in the RISK MANAGEMENT FILE.

Where 41°C is not exceeded, no justification is required.

If analyses documented in the RISK MANAGEMENT FILE demonstrate that APPLIED PART temperatures cannot be affected by operation of the ME EQUIPMENT including in SINGLE FAULT CONDITIONS, measurement of APPLIED PART temperature according to 11.1.3 is not required.

Surfaces of APPLIED PARTS that are cooled below ambient temperatures can also result in an unacceptable RISK and shall be evaluated as part of the RISK MANAGEMENT PROCESS.

11.1.3 * Measurements

Where engineering judgement by the MANUFACTURER indicates that temperature limits cannot be exceeded, no measurement is required. Where such judgements indicate that the test corner will not impact the measurements, it may be omitted. However, the rationale for such judgement shall be documented in the RISK MANAGEMENT FILE. If the test corner is used, its surfaces shall not exceed 90 °C.

Copyright International Electrotechnical Commission
Provided by IHS Markit under license with IEC
No reproduction or networking permitted without license from IHS Not for Resale, 08/26/2020 19:12:41 MDT

For ACCESSIBLE PARTS that are likely to be touched and for APPLIED PARTS, the probability of occurrence of contact and of the duration of contact is determined and documented in the RISK MANAGEMENT FILE.

Compliance with the requirements of 11.1.1 and 11.1.2 is checked by inspection of the RISK MANAGEMENT FILE and the instructions for use, operation of ME EQUIPMENT and temperature measurements as follows:

a) Positioning

1) ME EQUIPMENT is tested in the position(s) of NORMAL USE.

2) ME EQUIPMENT is placed in a test corner. The test corner consists of two walls at right angles, a floor and, if necessary, a ceiling, all of dull black painted plywood of 20 mm thickness. The linear dimensions of the test corner are at least 115 % of the linear dimensions of the ME EQUIPMENT under test.

The ME EQUIPMENT is positioned in the test corner as follows:

- *ME EQUIPMENT normally used on a floor or a table is placed as near to the walls as is likely to occur in NORMAL USE.*
- *ME EQUIPMENT normally affixed to a wall is mounted on one of the walls, as near to the other wall and to the floor or ceiling as is likely to occur in NORMAL USE.*
- *ME EQUIPMENT normally affixed to a ceiling is mounted on the ceiling as near to the walls as is likely to occur in NORMAL USE.*

3) HAND-HELD ME EQUIPMENT is suspended in its normal position, in still air.

4) ME EQUIPMENT intended for installation in a cabinet or wall is built in as required by the technical description (see 7.9.3.1), using dull black painted plywood walls, 10 mm thick when representing cabinet walls if the technical description so specify and 20 mm thick when representing building walls.

b) Supply

- *ME EQUIPMENT having heating elements is operated as in NORMAL USE, with all heating elements energized unless prevented by switching interlocks, the supply voltage being equal to 110 % of the maximum RATED voltage.*
- *Motor operated ME EQUIPMENT is operated under normal load and normal DUTY CYCLE and the least favourable voltage between 90 % of the minimum RATED voltage and 110 % of the maximum RATED voltage.*
- *Combined heating and motor operated and other ME EQUIPMENT is tested both at 110 % of the maximum RATED voltage and at 90 % of the minimum RATED voltage.*
- *When modules are tested separately, the configuration for testing simulates the worst case conditions of NORMAL USE that might affect the test result.*

c) Thermal stabilization

- *For ME EQUIPMENT intended for non-CONTINUOUS OPERATION:*

  After operating in standby/quiescent mode until THERMAL STABILITY is reached, the ME EQUIPMENT is operated in NORMAL USE over consecutive cycles until THERMAL STABILITY is again achieved, or for 7 h, whichever is shorter. The "on" and "off" periods for each cycle are the RATED "on" and "off" periods;

- *For ME EQUIPMENT for CONTINUOUS OPERATION:*

  The ME EQUIPMENT is operated until THERMAL STABILITY is reached.

d) Temperature measurement

- *Resistance method (for windings):*

  The value of the temperature rise of a copper winding is calculated from the formula:

Copyright International Electrotechnical Commission
Provided by IHS Markit under license with IEC
No reproduction or networking permitted without license from IHS Not for Resale, 08/26/2020 19:12:41 MDT

$$\Delta T = \frac{R_2 - R_1}{R_1}(234{,}5 + T_1) - (T_2 - T_1)$$

where:

ΔT is the temperature rise in °C;

R_1 is the resistance at the beginning of the test in Ω;

R_2 is the resistance at the end of the test in Ω;

T_1 is the room temperature at the beginning of the test in °C;

T_2 is the room temperature at the end of the test in °C.

At the beginning of the test, windings are to be at room temperature.

NOTE When the resistance method is used, it is recommended that the resistance of windings at the end of the test be determined by taking measurements as soon as possible after switching off, and then at short intervals so that a curve of resistance against time can be plotted for ascertaining the value at the instant of switching off.

– *Thermocouple and other methods (for all measurements):*

Measurement is made by devices or sensors so chosen and positioned that they have a negligible effect on the temperature of the part under test.

When thermocouples are used to determine the temperature of windings, the temperature limits of Table 22 are to be reduced by 10 °C.

The temperature of electrical insulation, other than that of windings, is determined on the surface of the insulation at places where failure could cause a short circuit, bridging of a MEANS OF PROTECTION, bridging of insulation or reduction of CREEPAGE DISTANCES or AIR CLEARANCES below the values specified for the insulation type in 8.9.

The point of separation of cores of a multicore cord and where insulated wires enter lampholders are examples of places where temperatures might be measured.

e) Test criteria

During the test THERMAL CUT-OUTS are not de-activated.

The maximum temperature of a part is determined by measuring the temperature rise of the part under test and adding it to the maximum allowed ambient temperature specified in the technical description (see 7.9.3.1). Where thermal regulatory devices make this method inappropriate, alternative methods for measurement are justified in the RISK MANAGEMENT FILE.

11.1.4 GUARDS

GUARDS intended to prevent contact with hot or cold accessible surfaces of ME EQUIPMENT shall be removable only with the aid of a TOOL.

Compliance is checked by inspection.

11.2 * Fire prevention

11.2.1 * Strength and rigidity required to prevent fire in ME EQUIPMENT

ENCLOSURES shall have the strength and rigidity necessary to avoid a fire that could occur as a result of a total or partial collapse caused by reasonably foreseeable misuse.

Compliance is checked by the mechanical strength tests for ENCLOSURES (see 15.3).

Copyright International Electrotechnical Commission
Provided by IHS Markit under license with IEC
No reproduction or networking permitted without license from IHS Not for Resale, 08/26/2020 19:12:41 MDT

11.2.2 * ME EQUIPMENT and ME SYSTEMS used in conjunction with OXYGEN RICH ENVIRONMENTS

11.2.2.1 RISK of fire in an OXYGEN RICH ENVIRONMENT

In ME EQUIPMENT and ME SYSTEMS, the RISK of fire in an OXYGEN RICH ENVIRONMENT shall be reduced as far as possible under NORMAL CONDITION or SINGLE FAULT CONDITIONS (as identified in 11.2.3). An unacceptable RISK of fire is considered to exist in an OXYGEN RICH ENVIRONMENT when a source of ignition is in contact with ignitable material and there is no means that would limit the spread of a fire.

NOTE 1 For oxygen concentrations up to 25 % at one atmosphere or partial pressures up to 27,5 kPa for higher atmospheric pressures, the requirements in 13.1.1 are considered to be sufficient.

a) * A source of ignition is considered to exist in an OXYGEN RICH ENVIRONMENT when any of the following conditions exist in NORMAL CONDITION and SINGLE FAULT CONDITIONS (including voltage and current):

   1) the temperature of the material is raised to its ignition temperature;

   2) temperatures could affect solder or solder joints causing loosening, short circuiting or other failures that could result in sparking or raising the temperature of the material to its ignition temperature;

   3) parts affecting safety crack or change their outer shape exposing temperatures exceeding 300 °C or sparks (see 4) and 5) below) due to overheating;

   4) temperatures of parts or components could exceed 300 °C;

   5) sparks provide adequate energy for ignition by exceeding the limits of Figure 35 to Figure 37 (inclusive).

   Items 4) and 5) address the worst case where the atmosphere is 100 % oxygen, the contact material (for item 5) is solder and the fuel is cotton. Available fuels and oxygen concentrations should be taken into consideration when applying these specific requirements. Where deviations from these worst case limits are made (based on lower oxygen concentrations or less flammable fuels) they shall be justified and documented in the RISK MANAGEMENT FILE.

   As an alternative to 11.2.2.1 a) 5), the following test may be used to determine whether a source of ignition exists.

   First, the place(s) within the ME EQUIPMENT where sparking might cause ignition are identified. Then the material(s) of the parts between which sparks can occur is identified. Samples of the same material are then used to construct the contact pins for the test apparatus (see Figure 34).

   Other parameters for the test are: oxygen concentration, fuel, electrical parameters (current, voltage, capacitance, inductance or resistance). These parameters are chosen such that they represent the worst case for the ME EQUIPMENT.

   NOTE 2 For ME EQUIPMENT that includes a circuit not addressed in Figure 35 to Figure 37 (inclusive), either the test voltage or current may be set at three times the worst case values with the other parameter set at the worst case value for determining whether ignition can occur.

Copyright International Electrotechnical Commission
Provided by IHS Markit under license with IEC
No reproduction or networking permitted without license from IHS Not for Resale, 08/26/2020 19:12:41 MDT

Two contact pins made of the material to be considered are placed in opposition (see Figure 34). One pin has a diameter of 1 mm, the other of 3 mm. The electrical source is connected to the pins as shown in Figure 35 to Figure 37. A piece of cotton is placed close to the contact surfaces of the two pins. The contacts are constantly flushed by oxygen with a speed of less than 0,5 m/s via a tube. The cathode is moved to the anode to close the contacts and pulled back to open them again. A minimum of 300 trials has to be performed before it can be decided that the sparks do not ignite. If the sparks get smaller because of bad surfaces of the electrodes, the electrodes are cleaned with a file. If the cotton gets black because it became oxidized then it is replaced. In Figure 36 and Figure 37, the resistance used to control current flowing into the inductor and the time constant for charging the capacitor is chosen such that it has minimal impact on the energy of the spark. This is tested by visual inspection without the capacitor in place or with the inductor shorted.

The situation with the highest voltage or current respectively and no ignition defines the upper limit. A safe upper limit is given by dividing the upper limit of voltage or current respectively with the safety margin factor of three.

NOTE 3 The safety margin factor is considered to cover the uncertainty of sparking experiments and the variability of the underlying parameters like pressure, quality of cotton or of the contact materials.

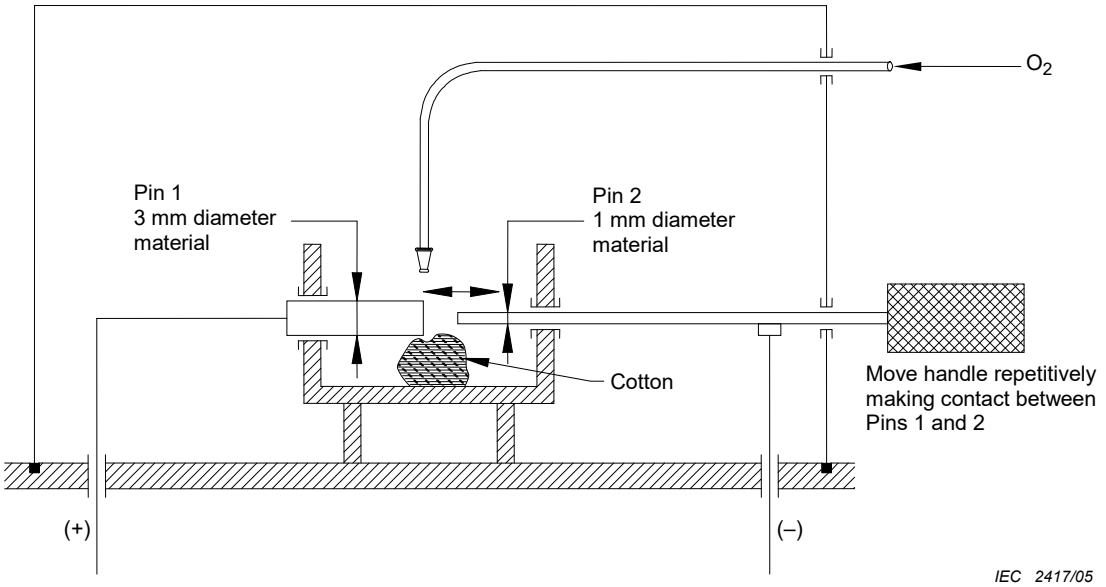

Figure 34 – Spark ignition test apparatus
(see 11.2.2.1)

Copyright International Electrotechnical Commission
Provided by IHS Markit under license with IEC
No reproduction or networking permitted without license from IHS
Not for Resale, 08/26/2020 19:12:41 MDT

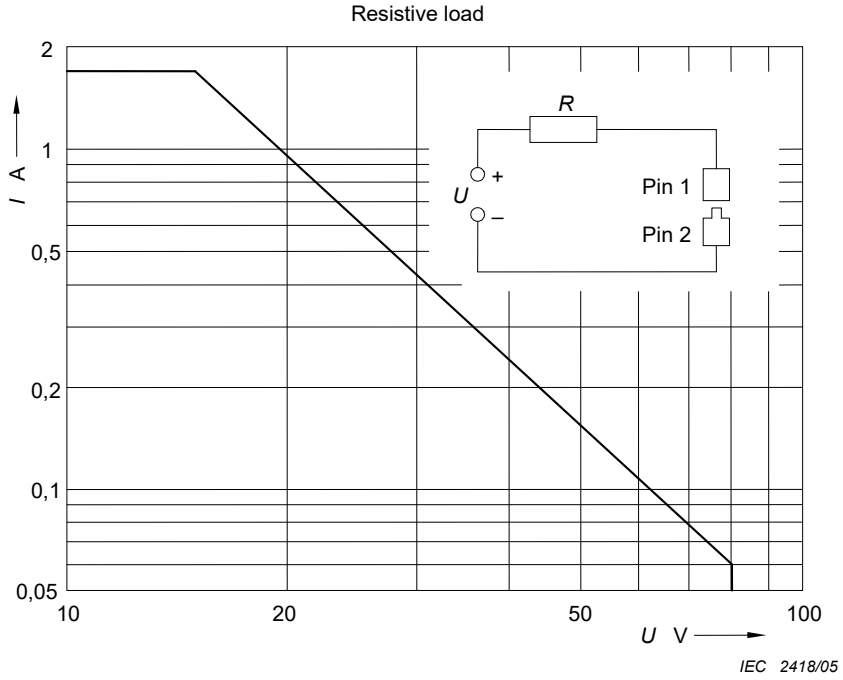

Figure 35 – Maximum allowable current *I* as a function of the maximum allowable voltage *U* measured in a purely resistive circuit in an OXYGEN RICH ENVIRONMENT
(see 11.2.2.1)

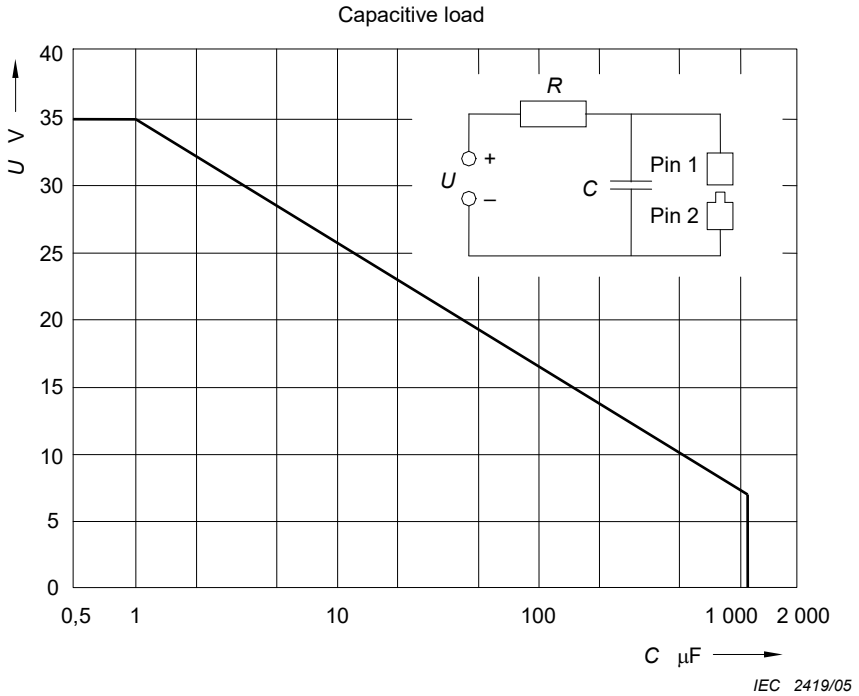

Figure 36 – Maximum allowable voltage *U* as a function of the capacitance *C* measured in a capacitive circuit used in an OXYGEN RICH ENVIRONMENT
(see 11.2.2.1)

Copyright International Electrotechnical Commission
Provided by IHS Markit under license with IEC
No reproduction or networking permitted without license from IHS
Not for Resale, 08/26/2020 19:12:41 MDT

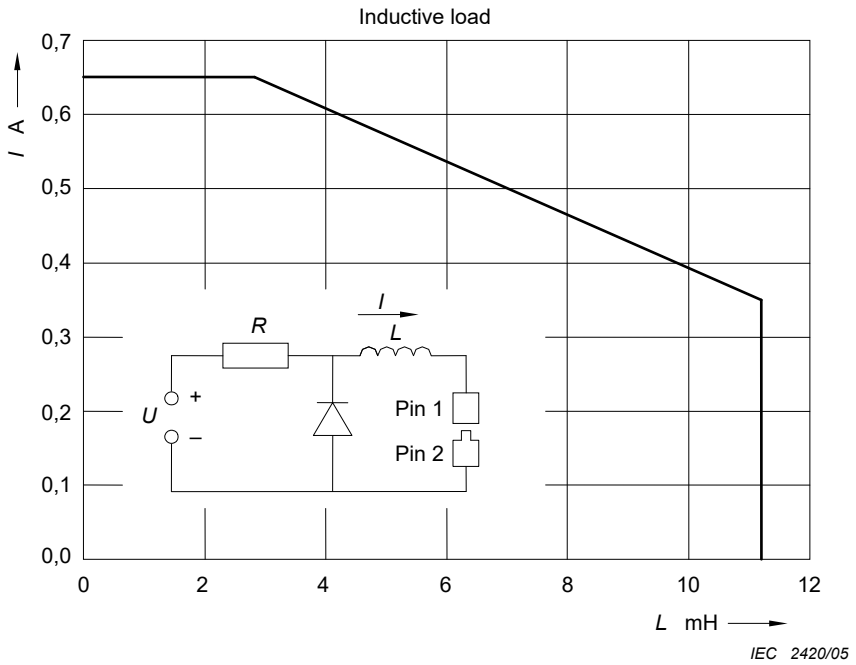

Figure 37 – Maximum allowable current *I* as a function of the inductance *L* measured in an inductive circuit in an OXYGEN RICH ENVIRONMENT
(see 11.2.2.1)

b) The following configurations, alone or in combination as appropriate (as determined by the application of the RISK MANAGEMENT PROCESS), are considered to provide an acceptable RESIDUAL RISK of fire in an OXYGEN RICH ENVIRONMENT.

1) Electrical components in a compartment with an OXYGEN RICH ENVIRONMENT shall have power supplies with limited energy levels. Those energy levels shall be less than those which are considered to be sufficient for ignition (see 11.2.2.1 a)).

Compliance is checked by inspection of the design and measurement or calculation of power, energy and temperature values in NORMAL CONDITION and SINGLE FAULT CONDITION (as identified in 11.2.3).

or

2) * Compartments that contain parts or components that can be a source of ignition (as defined in 11.2.2.1 a)) only under SINGLE FAULT CONDITION (as identified in 11.2.3) and that can be penetrated by oxygen (e.g. because of an undetected leak) shall be ventilated such that the oxygen concentration will not exceed 25 %.

Compliance is checked by the following test:

The oxygen concentration is measured for such a period that the highest possible concentration of oxygen occurs. The least favourable control settings are selected. The leaking conditions of oxygen are selected such that they provide the minimum leak that could be detected by the OPERATOR (e.g. because of a failure of the function of the device). If the concentration of oxygen exceeds 25 % in the presence of parts or components that could be a source of ignition including at the moment energy is applied, it constitutes a failure.

or

3) * A compartment that contains parts or components that can be a source of ignition (as defined in 11.2.2.1 a)) only under SINGLE FAULT CONDITION (as identified in 11.2.3) IS separated from another compartment that contains an OXYGEN RICH ENVIRONMENT by

Copyright International Electrotechnical Commission
Provided by IHS Markit under license with IEC
No reproduction or networking permitted without license from IHS
Not for Resale, 08/26/2020 19:12:41 MDT

sealing all joints and any holes for cables, shafts or for other purpose. The effect of possible leaks and failures under SINGLE FAULT CONDITION (as identified in 11.2.3) that could cause ignition shall be evaluated using a RISK ASSESSMENT to determine the appropriate maintenance intervals.

Compliance is checked by visual inspection and by inspection of the documentation provided by the MANUFACTURER including the RISK MANAGEMENT FILE.

or

4) Electrical components in a compartment containing an OXYGEN RICH ENVIRONMENT that can become a source of ignition (as defined in 11.2.2.1 a)) only under SINGLE FAULT CONDITIONS (as identified in 11.2.3) shall be enclosed in such a way that should ignition occur within the ENCLOSURE, the fire would self-extinguish rapidly and no hazardous amount of toxic gases would reach the PATIENT.

Compliance shall be checked by starting a fire in the ENCLOSURE. If it is not evident that toxic gases cannot reach the PATIENT, the gas that could reach the PATIENT is analyzed.

11.2.2.2 * External exhaust outlets for OXYGEN RICH ENVIRONMENT

External exhaust outlets of an OXYGEN RICH ENVIRONMENT shall not be located so that RISK of ignition occurs because of any electrical component (which could cause a spark in NORMAL USE or SINGLE FAULT CONDITION as identified in 11.2.3) mounted on the outside of the ME EQUIPMENT or an ME SYSTEM. RISK of ignition is considered to be sufficiently low if oxygen concentration in the immediate surroundings of the electrical component does not exceed 25 % under the least favourable conditions of operation.

Compliance is checked by inspection.

11.2.2.3 Electrical connections in OXYGEN RICH ENVIRONMENTS

Electrical connections within a compartment containing an OXYGEN RICH ENVIRONMENT under NORMAL USE shall not produce sparks because of loosening or breaking unless they are limited in power and energy to the values identified in 11.2.2.1 a) 5).

Prevention of loosening or breaking is accomplished by the following or equivalent methods.

– Screw-attachments shall be protected against loosening during use by methods such as varnishing, the use of spring washers or application of adequate torques.
– Soldered, crimped and pin-and-socket connections of cables that exit the ENCLOSURE shall include additional mechanical fixing.

Compliance is checked by visual inspection.

11.2.3 SINGLE FAULT CONDITIONS related to OXYGEN RICH ENVIRONMENTS in conjunction with ME EQUIPMENT and ME SYSTEMS

– Failure of a ventilation system constructed in accordance with 11.2.2.1 b) 2).
– Failure of a barrier constructed in accordance with 11.2.2.1 b) 3).
– Failure of a component that creates a source of ignition (as defined in 11.2.2.1 a)).
– Failure of insulation (whether solid material or spacing) providing the equivalent of at least one MEANS OF PATIENT PROTECTION but less than two MEANS OF PATIENT PROTECTION (as described in 8.8 and 8.9) that could create a source of ignition (as defined in 11.2.2.1 a)).
– Failure of a pneumatic component that results in leakage of oxygen-enriched gas.

11.3 * Constructional requirements for fire ENCLOSURES of ME EQUIPMENT

This subclause provides an alternative means of compliance with selected HAZARDOUS SITUATIONS and fault conditions as identified in 13.1.2. In doing so, the following constructional

--`,,```,,,,````-`-`,,`,,`,`,,`---
Copyright International Electrotechnical Commission
Provided by IHS Markit under license with IEC
No reproduction or networking permitted without license from IHS
Not for Resale, 08/26/2020 19:12:41 MDT

requirements shall be met or specifically analyzed in the RISK MANAGEMENT FILE and if not met, specific justification shall also be given.

a) Insulated wire and connectors within the fire ENCLOSURE shall have a flammability classification of minimum V-2 when tested in accordance with IEC 60695-11-10, or be insulated with PVC, TFE, PTFE, FEP, polychloroprene or polyimide.

Printed circuit boards and insulating material on which components are mounted shall have a flammability classification of V-2, or better, according to IEC 60695-11-10.

Compliance is checked by inspection of data on materials, or by performing the V tests specified in IEC 60695-11-10 on three samples of the relevant parts being tested. The samples can be any of the following:

1) *complete parts; or*
2) *sections of a part, including the area with the least wall thickness and any ventilation openings.*

Components certified in accordance with IEC 60695-11-10 need not be tested.

b) The fire ENCLOSURE shall meet the following requirements:

1) The bottom shall:

- have no openings; or
- to the extent specified in Figure 39, shall be constructed with baffles as specified in Figure 38; or
- be made of metal, perforated as specified in Table 25; or
- be a metal screen with a mesh not exceeding 2 mm × 2 mm centre to centre and a wire diameter of at least 0,45 mm.

2) The sides within the area that is included within the inclined line C in Figure 39 shall:

- have no openings; or
- be made of metal, perforated as specified in Table 25; or
- be a metal screen with a mesh not exceeding 2 mm × 2 mm centre to centre and a wire diameter of at least 0,45 mm.

3) The ENCLOSURE, and any baffle or flame barrier, shall be made of metal (except magnesium) or of non-metallic materials, except for constructions according to Table 25 and constructions with a mesh, having a flammability classification of V-2 (or better) for TRANSPORTABLE ME EQUIPMENT and V-1 (or better) for FIXED ME EQUIPMENT or STATIONARY ME EQUIPMENT in accordance with IEC 60695-11-10.

The ENCLOSURE, and any baffle or flame barrier, shall have adequate rigidity.

NOTE Other design solutions for openings in the fire ENCLOSURE (e.g. baffle solutions) could be acceptable, like solutions provided in other standards. See first paragraph of 11.3 with respect to RISK MANAGEMENT.

Conformity is checked by inspection. In case of doubt, the flammability classification of requirement b) 3) is checked as in a).

Copyright International Electrotechnical Commission
Provided by IHS Markit under license with IEC
No reproduction or networking permitted without license from IHS Not for Resale, 08/26/2020 19:12:41 MDT

Table 25 – Acceptable perforation of the bottom of an ENCLOSURE

Minimum thickness mm	Maximum diameter of holes mm	Minimum spacing of holes centre to centre mm
0,66	1,14	1,70 (233 holes/645 mm^2)
0,66	1,19	2,36
0,76	1.15	1,70
0,76	1,19	2,36
0,81	1,91	3,18 (72 holes/645 mm^2)
0,89	1,90	3,18
0,91	1,60	2,77
0,91	1,98	3,18
1,00	1,60	2,77
1,00	2,00	3,00

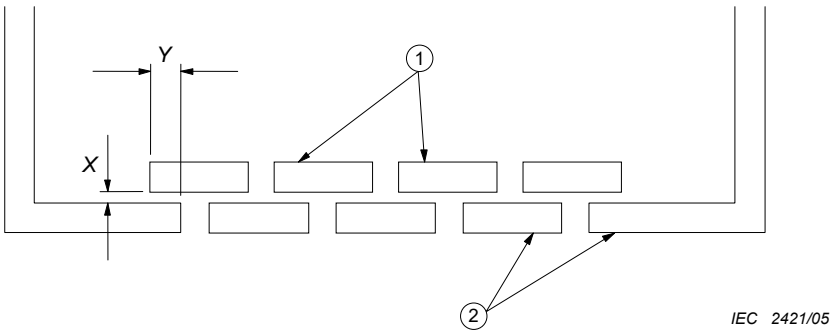

Y = twice X but never less than 25 mm

(1) Baffle plates (may be below the bottom of the ENCLOSURE)

(2) Bottom of the ENCLOSURE

Figure 38 – Baffle
(see 11.3)

Copyright International Electrotechnical Commission
Provided by IHS Markit under license with IEC
No reproduction or networking permitted without license from IHS
Not for Resale, 08/26/2020 19:12:41 MDT

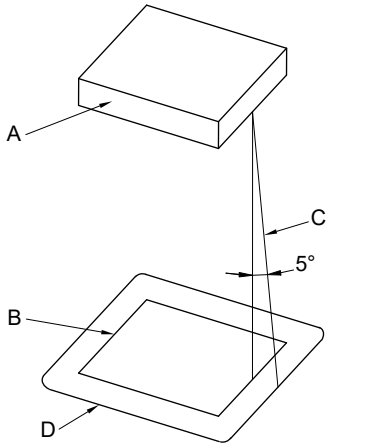

Key

A Part or component of the ME EQUIPMENT that is considered to be a source of fire. This consists of an entire component or part of the ME EQUIPMENT if it is not otherwise shielded, or the unshielded portion of a component that is partially shielded by its casing.

B Projection of the outline of A on the horizontal plane.

C Inclined line that traces out the minimum area of the bottom and sides to be constructed as specified in 11.3 b) 1*)* and 11.3 b) 2). This line projects at a 5° angle from the vertical at every point around the perimeter of A and is oriented so as to trace out the maximum area.

D Minimum area of the bottom to be constructed as specified in 11.3 b) 1).

Figure 39 – Area of the bottom of an ENCLOSURE as specified in 11.3 b) 1)
(see 11.3)

11.4 * ME EQUIPMENT and ME SYSTEMS intended for use with flammable anaesthetics

ME EQUIPMENT, ME SYSTEMS or their parts described in the ACCOMPANYING DOCUEMNTS for use with flammable anaesthetics (CATEGORY AP) or flammable anaesthetics with oxidants (CATEGORY APG) shall meet the applicable requirements of Annex G.

11.5 * ME EQUIPMENT and ME SYSTEMS intended for use in conjunction with flammable agents

The MANUFACTURER'S RISK MANAGEMENT PROCESS shall address the possibility of fire and associated mitigations.

Compliance is determined by inspection of the RISK MANAGEMENT FILE.

11.6 Overflow, spillage, leakage, ingress of water or particulate matter, cleaning, disinfection, sterilization and compatibility with substances used with the ME EQUIPMENT

11.6.1 General

The construction of ME EQUIPMENT and ME SYSTEMS shall ensure a sufficient degree of protection against overflow, spillage, leakage, ingress of water or particulate matter, cleaning, disinfection and sterilization as well as compatibility with substances used with the ME EQUIPMENT.

11.6.2 * Overflow in ME EQUIPMENT

If ME EQUIPMENT incorporates a reservoir or liquid storage chamber that is liable to be overfilled or to overflow in NORMAL USE, liquid overflowing from the reservoir or chamber shall not wet any MEANS OF PROTECTION that is liable to be adversely affected by such a liquid, nor result in the loss of BASIC SAFETY or ESSENTIAL PERFORMANCE.

Copyright International Electrotechnical Commission
Provided by IHS Markit under license with IEC
No reproduction or networking permitted without license from IHS Not for Resale, 08/26/2020 19:12:41 MDT

If the maximum fill level is indicated by marking on the ME EQUIPMENT and a warning or safety notice is given, no HAZARDOUS SITUATION (as specified in 13.1) or unacceptable RISK due to overflow shall develop if the reservoir or liquid storage chamber is filled to its maximum capacity and the TRANSPORTABLE ME EQUIPMENT is tilted through an angle of 10°, or for MOBILE ME EQUIPMENT exceeding 45 kg, if it is moved over a threshold as described in 9.4.2.4.3.

If no warning or safety notice is given regarding the maximum fill level, no HAZARDOUS SITUATION (as specified in 13.1) or unacceptable RISK due to overflow shall develop if the reservoir or liquid storage chamber is filled to 15 % above the maximum capacity and the TRANSPORTABLE ME EQUIPMENT is tilted through an angle of 10°, or in MOBILE ME EQUIPMENT exceeding 45 kg, if it is moved over a threshold as described in 9.4.2.4.3.

Compliance is checked by the following:

If warnings or safety notices regarding overfilling are marked on the TRANSPORTABLE ME EQUIPMENT, the liquid reservoir is filled to the indicated maximum level.

If there is no warning or safety notice regarding overfilling marked on the TRANSPORTABLE ME EQUIPMENT, the liquid reservoir is filled completely and subsequently a further quantity equal to 15 % of the capacity of the reservoir is added poured in steadily over a period of 1 min.

TRANSPORTABLE ME EQUIPMENT is subsequently tilted through an angle of 10° in the least favourable direction(s) (if necessary with refilling) starting from the position of NORMAL USE.

MOBILE ME EQUIPMENT exceeding 45 kg is moved over a threshold as described in 9.4.2.4.3.

After these PROCEDURES, the ME EQUIPMENT is to pass the appropriate dielectric strength and LEAKAGE CURRENT tests and is to show no signs of wetting of uninsulated electrical parts or electrical insulation of parts that could result in the loss of BASIC SAFETY or ESSENTIAL PERFORMANCE in NORMAL CONDITION or in combination with a SINGLE FAULT CONDITION (based on a visual inspection).

11.6.3 * Spillage on ME EQUIPMENT and ME SYSTEMS

ME EQUIPMENT and ME SYSTEMS requiring the handling of liquids in NORMAL USE, including ME EQUIPMENT or ME SYSTEMS used in an environment where the PROCESS has determined that spillage on the ME EQUIPMENT is likely to occur, shall be so constructed that spillage does not wet parts that are likely to result in the loss of BASIC SAFETY or ESSENTIAL PERFORMANCE .

Compliance is checked by inspection of the RISK MANAGEMENT FILE and by the following test:

The ME EQUIPMENT is positioned according to 5.4 a). A quantity of liquid is poured steadily on a point on the top of the ME EQUIPMENT. The type of liquid, volume, duration of the spill, and location (point) are determined through RISK ANALYSIS. Test conditions that simulate the worst case for spillage shall be documented in the RISK MANAGEMENT FILE.

After these PROCEDURES, the ME EQUIPMENT is to pass the appropriate dielectric strength and LEAKAGE CURRENT tests and is to show no signs of wetting of uninsulated electrical parts or electrical insulation of parts that could result in the loss of BASIC SAFETY or ESSENTIAL PERFORMANCE in NORMAL CONDITION or in combination with a SINGLE FAULT CONDITION (based on a visual inspection).

11.6.4 * Leakage

See 13.2.6.

11.6.5 * Ingress of water or particulate matter into ME EQUIPMENT and ME SYSTEMS

ENCLOSURES of ME EQUIPMENT and ME SYSTEMS designed to give a specified degree of protection against harmful ingress of water or particulate matter shall provide this protection in accordance with the classification of IEC 60529. See also 7.2.9.

Copyright International Electrotechnical Commission
Provided by IHS Markit under license with IEC
No reproduction or networking permitted without license from IHS Not for Resale, 08/26/2020 19:12:41 MDT

Compliance is checked by the tests of IEC 60529 with the ME EQUIPMENT placed in the least favourable position of NORMAL USE and by inspection.

After the tests of IEC 60529, the ME EQUIPMENT is to show no signs of bridging of insulation (or electrical components) that is likely to result in the loss of BASIC SAFETY or ESSENTIAL PERFORMANCE in NORMAL CONDITION or in combination with a SINGLE FAULT CONDITION (based on a visual inspection) followed by the appropriate dielectric strength and LEAKAGE CURRENT tests.

11.6.6 Cleaning and disinfection of ME EQUIPMENT and ME SYSTEMS

ME EQUIPMENT, ME SYSTEMS and their parts, including APPLIED PARTS and ACCESSORIES, shall be capable of withstanding, without damage or deterioration of safety provisions, the cleaning or disinfection PROCESSES specified in the instructions for use. See also 7.9.2.12.

The MANUFACTURER shall evaluate the effects of multiple cleanings/disinfections as indicated in the instructions for use during the EXPECTED SERVICE LIFE of the ME EQUIPMENT, ME SYSTEM, their parts and ACCESSORIES and assure that these PROCESSES do not result in the loss of BASIC SAFETY or ESSENTIAL PERFORMANCE.

Where compliance with this standard could be effected by cleaning or disinfecting the ME EQUIPMENT, ME SYSTEM and their parts and ACCESSORIES, they are cleaned or disinfected once in accordance with the methods specified including any cooling or drying period. After these PROCEDURES, the ME EQUIPMENT, ME EQUIPMENT parts or ACCESSORIES are to show no signs of deterioration that could result in an unacceptable RISK (visual inspection) followed by the appropriate dielectric strength and LEAKAGE CURRENT tests. The RISK MANAGEMENT FILE is inspected to verify that the MANUFACTURER has evaluated the affects of multiple cleanings.

11.6.7 Sterilization of ME EQUIPMENT and ME SYSTEMS

ME EQUIPMENT, ME SYSTEMS and their parts or ACCESSORIES intended to be sterilized shall be assessed and documented according to ISO 11135-1, ISO 11137-1 or ISO 17665-1 as appropriate. See also 7.9.2.12.

After these PROCEDURES, the ME EQUIPMENT, ME SYSTEM and their parts or ACCESSORIES are to show no signs of deterioration that could result in an unacceptable RISK (visual inspection) followed by the appropriate dielectric strength and LEAKAGE CURRENT tests and by inspection of the RISK MANAGEMENT FILE.

11.6.8 * Compatibility with substances used with the ME EQUIPMENT

When applicable, the MANUFACTURER shall address in the RISK MANAGEMENT PROCESS the RISKS associated with compatibility with substances used with the ME EQUIPMENT. Such RISKS may be addressed through the application of appropriate ISO or IEC standards (giving the presumption of acceptable RISK according to 4.2) such as ISO 15001 [70] for components that contain oxygen at pressures greater than 50 kPa or through the MANUFACTURER'S own testing and RISK CONTROL measures.

Compliance is checked by inspection of the RISK MANAGEMENT FILE.

11.7 Biocompatibility of ME EQUIPMENT and ME SYSTEMS

ME EQUIPMENT, ME SYSTEM and their parts or ACCESSORIES intended to come into direct or indirect contact with biological tissues, cells or body fluids shall be assessed and documented according to the guidance and principles given in the ISO 10993 series of standards.

Compliance is checked by inspection of the information provided by the MANUFACTURER.

11.8 * Interruption of the power supply / SUPPLY MAINS to ME EQUIPMENT

ME EQUIPMENT shall be so designed that an interruption and restoration of the power supply shall not result in the loss of BASIC SAFETY or ESSENTIAL PERFORMANCE .

NOTE This can require testing at several durations and ME EQUIPMENT states.

Copyright International Electrotechnical Commission
Provided by IHS Markit under license with IEC
No reproduction or networking permitted without license from IHS Not for Resale, 08/26/2020 19:12:41 MDT

Compliance is checked by interruption and restoration of relevant power supplies.

12 * Accuracy of controls and instruments and protection against hazardous outputs

12.1 Accuracy of controls and instruments

When applicable, the MANUFACTURER shall address in the RISK MANAGEMENT PROCESS the RISKS associated with accuracy of controls and instruments.

Compliance is checked by inspection of the RISK MANAGEMENT FILE.

12.2 USABILITY of ME EQUIPMENT

The MANUFACTURER shall address the RISK(S) of poor USABILITY, including those associated with identification, marking and documents, through a USABILITY ENGINEERING PROCESS complying with IEC 60601-1-6:2010, IEC 60601-1-6:2010/AMD1:2013 and IEC 60601-1-6:2010/AMD2:2020.

Compliance is checked as specified in IEC 60601-1-6.

12.3 ALARM SYSTEMS

If the MANUFACTURER has implemented an ALARM SYSTEM, this ALARM SYSTEM shall comply with IEC 60601-1-8:2006, IEC 60601-1-8:2006/AMD1:2012 and IEC 60601-1-8:2006/AMD2:2020.

Compliance is checked as specified in IEC 60601-1-8.

12.4 Protection against hazardous output

12.4.1 * Intentional exceeding of safety limits

When applicable, the MANUFACTURER shall address in the RISK MANAGEMENT PROCESS the RISKS associated with hazardous output arising from the intentional exceeding of safety limits.

Compliance is checked by inspection of the RISK MANAGEMENT FILE.

12.4.2 Indication relevant to safety

When applicable, the MANUFACTURER shall address in the RISK MANAGEMENT PROCESS the need to indicate any hazardous output.

EXAMPLE 1 Prior to the delivery of energy or substances to a PATIENT the energy, rate or volume is indicated quantitively.

EXAMPLE 2 During activation of an X-ray output, a flashing yellow light is displayed.

Compliance is checked by inspection of the RISK MANAGEMENT FILE.

12.4.3 * Accidental selection of excessive output values

Where ME EQUIPMENT is a multi-purpose unit designed for providing both low-intensity and high-intensity outputs for different treatments, the MANUFACTURER shall address in the RISK MANAGEMENT PROCESS the RISKS associated with accidental selection of excessive output values.

Compliance is checked by inspection of the RISK MANAGEMENT FILE.

12.4.4 Incorrect output

When applicable, the MANUFACTURER shall address in the RISK MANAGEMENT PROCESS the RISKS associated with incorrect output.

Copyright International Electrotechnical Commission
Provided by IHS Markit under license with IEC
No reproduction or networking permitted without license from IHS Not for Resale, 08/26/2020 19:12:41 MDT

EXAMPLE The RISKS associated with incorrect delivery of energy or substances to a PATIENT can be addressed by providing an alarm to alert the OPERATOR to any significant departure from the set level of delivery.

Compliance is checked by inspection of the RISK MANAGEMENT FILE.

12.4.5 Diagnostic or therapeutic radiation

12.4.5.1 Limits

For ME EQUIPMENT designed to produce radiation for diagnostic or therapeutic purposes, adequate provisions shall be made to protect PATIENTS, OPERATORS, other persons and sensitive devices in the vicinity, from unwanted or excessive radiation emitted by the ME EQUIPMENT.

NOTE Radiation from ME EQUIPMENT intended for application to PATIENTS for diagnostic or therapeutic purpose under medical supervision could exceed limits normally acceptable for the population as a whole.

As appropriate, particular standards shall specify requirements, limits and compliance tests to ensure radiation safety.

12.4.5.2 Diagnostic X-ray equipment

ME EQUIPMENT and ME SYSTEMS designed to produce X-radiation for diagnostic imaging purposes shall comply with IEC 60601-1-3.

Compliance is checked as specified in IEC 60601-1-3.

12.4.5.3 Radiotherapy equipment

When applicable, the MANUFACTURER shall address in the RISK MANAGEMENT PROCESS the RISKS associated with radiotherapy.

Compliance is checked by inspection of the RISK MANAGEMENT FILE.

12.4.5.4 Other ME EQUIPMENT producing diagnostic or therapeutic radiation

When applicable, the MANUFACTURER shall address in the RISK MANAGEMENT PROCESS the RISKS associated with ME EQUIPMENT producing diagnostic or therapeutic radiation other than for diagnostic X-rays and radiotherapy (see 12.4.5.2 and 12.4.5.3).

Compliance is checked by inspection of the RISK MANAGEMENT FILE.

12.4.6 Diagnostic or therapeutic acoustic pressure

When applicable, the MANUFACTURER shall address in the RISK MANAGEMENT PROCESS the RISKS associated with diagnostic or therapeutic acoustic pressure.

Compliance is checked by inspection of the RISK MANAGEMENT FILE.

13 * HAZARDOUS SITUATIONS and fault conditions for ME EQUIPMENT

13.1 Specific HAZARDOUS SITUATIONS

13.1.1 * General

When applying the SINGLE FAULT CONDITIONS as described in 4.7 and listed in 13.2, one at a time, none of the HAZARDOUS SITUATIONS in 13.1.2 to 13.1.4 (inclusive) shall occur in the ME EQUIPMENT.

The failure of any one component at a time, which could result in a HAZARDOUS SITUATION, is described in 4.7.

Copyright International Electrotechnical Commission
Provided by IHS Markit under license with IEC
No reproduction or networking permitted without license from IHS Not for Resale, 08/26/2020 19:12:41 MDT

13.1.2 * Emissions, deformation of ENCLOSURE or exceeding maximum temperature

The following HAZARDOUS SITUATIONS shall not occur:

– emission of flames, molten metal, poisonous or ignitable substance in hazardous quantities;

– deformation of ENCLOSURES to such an extent that compliance with 15.3.1 is impaired;

– temperatures of APPLIED PARTS exceeding the allowed values identified in Table 24 when measured as described in 11.1.3;

– * temperatures of ACCESSIBLE PARTS that are likely to be touched, but not intended to be touched to operate the ME EQUIPMENT, exceeding the limits in Table 34 when measured and adjusted as described in 11.1.3;

– * temperatures of ACCESSIBLE PARTS, intended to be touched to operate the ME EQUIPMENT, exceeding the limits in Table 23;

– exceeding the allowable values for “other components and materials” identified in Table 22 times 1,5 minus 12,5 °C. Limits for windings are found in Table 26, Table 27 and Table 31. In all other cases, the allowable values of Table 22 apply.

Temperatures shall be measured using the method described in 11.1.3.

Table 34 – Allowable maximum temperatures for ACCESSIBLE PARTS that are likely to be touched, but not intended to be touched to operate the ME EQUIPMENT

ME EQUIPMENT and its parts	Maximum temperature °C			
	Metal and liquids	Glass, porcelain, vitreous material	Moulded material, plastic, rubber	Wood
External surfaces of ACCESSIBLE PARTS that are likely to be touched for a time t < 1 s	80	90	104	150

The SINGLE FAULT CONDITIONS in 4.7, 8.1 b), 8.7.2 and 13.2.2, with regard to the emission of flames, molten metal or ignitable substances, shall not be applied to parts and components where:

– The construction of the supply circuit limits the power dissipation in SINGLE FAULT CONDITION to less than 15 W or the energy dissipation to less than 900 J.

Compliance is checked by drawing 15 W from the supply circuit for 1 min. If, after 1 min. the supply circuit can not supply 15 W, the circuit shall be considered to limit power dissipation to less than 15 W. The related design documentation is also reviewed.

NOTE 1 When the investigated part of the supply circuit is a battery, the limit for the power dissipation is considered directly on the output contacts of the battery supply circuit, even before an external protective device.

or

– Secondary circuits meet all of the following conditions:

- mounted on material with a flammability classification of V-1 in accordance with IEC 60695-11-10 or better;
- they are energized at a voltage of 60 V d.c. or 42,4 V peak or less in NORMAL and SINGLE FAULT CONDITION;
- they are limited to less than 100 VA or are limited to less than 6 000 J in SINGLE FAULT CONDITION;
- they employ wire insulation of types PVC, TFE, PTFE, FEP, polychloroprene or polybromide.

NOTE 2 When the investigated part of the supply circuit is a battery, the limit for the power dissipation is considered directly on the output contacts of the battery supply circuit, even before an external protective device.

--`,,```,,,,````-`-`,,`,,`,`,,`---

Copyright International Electrotechnical Commission
Provided by IHS Markit under license with IEC
No reproduction or networking permitted without license from IHS Not for Resale, 08/26/2020 19:12:41 MDT

Compliance is checked by the following:

– *by drawing 100 VA from the supply circuit for 5 s after application of the load if protection is by an electronic circuit;*

– *by drawing 100 VA from the supply circuit for 60 s for a positive temperature coefficient device, or in other cases.*

If, after the specified time above, the supply circuit cannot supply 100 VA, the circuit shall be considered to limit power dissipation to less than 100 VA. The related design documentation is also reviewed.

or

– The component is a COMPONENT WITH HIGH-INTEGRITY CHARACTERISTICS as described in 4.9.

Compliance is checked by evaluation of the design documentation.

or

– They are completely contained within a fire ENCLOSURE.

Compliance is checked by inspection and evaluation of the design documentation to assure that the ENCLOSURE is constructed in accordance with 11.3.

NOTE 3 The tests according to this subclause should be performed in the sequence indicated in Annex B.

After the tests of this clause, THERMAL CUT-OUTS and OVER-CURRENT RELEASES are inspected to determine that their setting has not changed (by heating, vibration or other causes) sufficiently to affect their safety function.

13.1.3 Exceeding LEAKAGE CURRENT or voltage limits

The following HAZARDOUS SITUATIONS shall not occur:

– exceeding the limits for LEAKAGE CURRENT in SINGLE FAULT CONDITION as indicated in 8.7.3;

– exceeding the voltage limits for the ACCESSIBLE PARTS and APPLIED PARTS indicated in 8.4.2.

13.1.4 Specific MECHANICAL HAZARDS

For specific MECHANICAL HAZARDS, see 9.1 to 9.8 (inclusive).

13.2 SINGLE FAULT CONDITIONS

13.2.1 General

During the application of the SINGLE FAULT CONDITIONS listed in 13.2.2 to 13.2.13 (inclusive), the NORMAL CONDITIONS identified in 8.1 a) shall also be applied in the least favourable combination.

If resistance to heat for insulation of thermoplastic materials that is used as SUPPLEMENTARY INSULATION or REINFORCED INSULATION is established by performing the ball-pressure test in 8.8.4.1, the test is performed at a temperature 25 °C higher than the temperature of the insulation measured during the tests of 13.2.2 to 13.2.13 (inclusive).

13.2.2 Electrical SINGLE FAULT CONDITION

Requirements and tests relating to this SINGLE FAULT CONDITION are found in 8.1.

13.2.3 Overheating of transformers in ME EQUIPMENT

Requirements and tests relating to this SINGLE FAULT CONDITION are found in 15.5.

13.2.4 Failure of THERMOSTATS

Requirements and tests relating to this SINGLE FAULT CONDITION are found in 13.2.13 and 15.4.2 for overloading situations.

Copyright International Electrotechnical Commission
Provided by IHS Markit under license with IEC
No reproduction or networking permitted without license from IHS Not for Resale, 08/26/2020 19:12:41 MDT

THERMOSTATS are short circuited or interrupted, whichever is less favourable.

13.2.5 Failure of temperature limiting devices

Requirements and tests relating to this SINGLE FAULT CONDITION are found in 13.2.13 and 15.4.2 for overloading situations.

THERMOSTATS are short circuited or interrupted, whichever is less favourable.

13.2.6 Leakage of liquid

ME EQUIPMENT shall be so constructed that liquid that might escape in a SINGLE FAULT CONDITION does not result in an unacceptable RISK.

Since only small amounts of liquid will escape when they leak, sealed rechargeable batteries are exempted from this requirement.

A RISK MANAGEMENT PROCESS shall be used to determine the appropriate test conditions for the ME EQUIPMENT.

Compliance is checked by inspection of the RISK MANAGEMENT FILE.

13.2.7 Impairment of cooling that could result in a HAZARDOUS SITUATION

ME EQUIPMENT shall be so designed that it remains SINGLE FAULT SAFE during the failure of cooling systems to operate as intended.

Impairments of cooling that can occur are simulated, for example:

– *single ventilation fans are locked consecutively;*

– *ventilation through openings in top and sides is impaired by covering of openings in the top of the ENCLOSURE or positioning of ME EQUIPMENT against walls;*

– *blocking of filters is simulated;*

– *the flow of a cooling agent is interrupted.*

Temperatures that exceed the limits set in 13.1.2 constitute a failure.

Compliance is checked utilizing the test methods of 11.1, which are applied as far as possible.

13.2.8 Locking of moving parts

ME EQUIPMENT shall be so designed that it remains SINGLE FAULT SAFE when moving parts become jammed.

Moving parts are locked if ME EQUIPMENT:

– *has moving ACCESSIBLE PARTS or APPLIED PARTS liable to be jammed, or*

– *is liable to be operated while unattended (this includes ME EQUIPMENT that is automatically or remotely controlled), or*

– *has one or more motors with a locked rotor torque smaller than the full load torque.*

If ME EQUIPMENT has more than one moving part as described above, only one part at a time is locked. If a SINGLE FAULT CONDITION can lock multiple motors, then all motors are locked simultaneously. For further test criteria see 13.2.10.

13.2.9 * Interruption and short circuiting of motor capacitors

ME EQUIPMENT shall be so designed that it remains SINGLE FAULT SAFE during the short circuit and open circuit of motor capacitors.

Copyright International Electrotechnical Commission
Provided by IHS Markit under license with IEC
No reproduction or networking permitted without license from IHS Not for Resale, 08/26/2020 19:12:41 MDT

Compliance is checked by performing the following test:

Motors with a capacitor in the circuit of an auxiliary winding are operated according to 13.2.10 with a locked rotor, with the capacitor short circuited or open circuited in turn. Capacitor voltages are measured with one side disconnected (open circuit). A measured voltage that exceeds the RATED value constitutes a failure.

The test with a short-circuited capacitor is not performed if the motor is provided with a capacitor complying with IEC 60252-1 and the ME EQUIPMENT is not intended for unattended use (including automatic or remote control).

For additional test criteria, see 13.2.10.

13.2.10 * Additional test criteria for motor operated ME EQUIPMENT

For every test in the SINGLE FAULT CONDITION of 13.2.8 and 13.2.9, taking into account the exemptions stated in 13.1.2, motor-operated ME EQUIPMENT is operated starting from COLD CONDITION, at RATED voltage or at the upper limit of the RATED voltage range for the following periods of time:

a) *30 s for:*
   - *HAND-HELD ME EQUIPMENT;*
   - *ME EQUIPMENT that has to be kept switched on by hand;*
   - *ME EQUIPMENT that has to be kept under physical load by hand;*

b) *5 min for other ME EQUIPMENT intended only for attended use (attended use excludes automated or remotely controlled ME EQUIPMENT that could operate when the OPERATOR is not present);*

c) *for the maximum period of a timer, if such a device terminates the operation, for ME EQUIPMENT not listed under a) or b);*

d) *as long as necessary to establish THERMAL STABILITY for all the remaining ME EQUIPMENT.*

Temperatures of windings are determined at the end of the specified test periods or at the instant of operation of fuses, THERMAL CUT-OUTS, motor protective devices and the like.

Temperatures are measured as specified in 11.1.3 d).

Temperatures that exceed the limits of Table 26 constitute a failure.

13.2.11 Failures of components in ME EQUIPMENT used in conjunction with OXYGEN RICH ENVIRONMENTS

Requirements and tests relating to these SINGLE FAULT CONDITIONS are found in 11.2.2.

13.2.12 Failure of parts that might result in a MECHANICAL HAZARD

Requirements and tests relating to these SINGLE FAULT CONDITIONS are found in Clause 9 and 15.3.

Copyright International Electrotechnical Commission
Provided by IHS Markit under license with IEC
No reproduction or networking permitted without license from IHS Not for Resale, 08/26/2020 19:12:41 MDT

Table 26 – * Temperature limits of motor windings

Temperature in °C

Type of ME EQUIPMENT	Insulation class				
	Class A	Class B	Class E	Class F	Class H
ME EQUIPMENT provided with a timer and not intended for unattended use and ME EQUIPMENT to be operated for 30 s or 5 min	200	225	215	240	260
Other ME EQUIPMENT					
– if impedance-protected, maximum value	150	175	165	190	210
– if protected by protection devices that operate during the first hour, maximum value	200	225	215	240	260
– after the first hour, maximum value	175	200	190	215	235
– after the first hour, arithmetic average	150	175	165	190	210
NOTE The temperature limits in this table were derived from IEC 61010-1:2001 [22].					

13.2.13 * Overload

13.2.13.1 * General overload test conditions

After the tests of 13.2.13.2 to 13.2.13.4 (inclusive), the ME EQUIPMENT, when cooled down to within 3 °C of the temperature in the test environment, shall remain safe.

Compliance is determined by inspection of the ME EQUIPMENT or the appropriate tests (such as dielectric strength of motor insulation according to 8.8.3).

13.2.13.2 ME EQUIPMENT with heating elements

a) ME EQUIPMENT having heating elements is checked for compliance as follows:

1) for thermostatically controlled ME EQUIPMENT having heating elements that is intended for built-in or for unattended operation or that has a capacitor not protected by a fuse or the like connected in parallel with the contacts of the THERMOSTAT: by the tests of 13.2.13.2 b) and 13.2.13.2 c);

2) for ME EQUIPMENT having heating elements RATED for non-CONTINUOUS OPERATION: by the tests of 13.2.13.2 b) and 13.2.13.2 c);

3) for other ME EQUIPMENT having heating elements: by the test of 13.2.13.2 b).

If more than one of the tests is applicable to the same ME EQUIPMENT, these tests are performed consecutively.

If, in any of the tests, a non-SELF-RESETTING THERMAL CUT-OUT operates, a heating element or an intentionally weak part ruptures, or if the current is otherwise interrupted before THERMAL STABILITY is established without the possibility of automatic restoration, the heating period is ended. However, if the interruption is due to the rupture of a heating element or of an intentionally weak part, the test is repeated on a second sample. Open circuiting of a heating element or of an intentionally weak part in the second sample does not in itself entail a failure to comply. However, if either sample fails to comply with the conditions specified in 13.1.2, it constitutes a failure.

b) ME EQUIPMENT having heating elements is tested under the conditions specified in 11.1, but without adequate heat discharge, the supply voltage being 90 % or 110 % of the RATED supply voltage, whichever is the least favourable.

If a non-SELF-RESETTING THERMAL CUT-OUT operates, or if the current is otherwise interrupted without the possibility of automatic restoration before THERMAL STABILITY is established, the operating period is ended. If interruption of the current does not occur,

--`,,`,,`-`-`,,`,,`,`,,`---
Copyright International Electrotechnical Commission
Provided by IHS Markit under license with IEC
No reproduction or networking permitted without license from IHS Not for Resale, 08/26/2020 19:12:41 MDT

ME EQUIPMENT is switched off as soon as THERMAL STABILITY is established and is allowed to cool to approximately room temperature.

For ME EQUIPMENT RATED for non-CONTINUOUS OPERATION, the duration of the test is equal to the RATED operating time.

c) *Heating parts of ME EQUIPMENT are tested with the ME EQUIPMENT operated in NORMAL CONDITION, at a supply voltage 110 % of the RATED supply voltage and as specified in 11.1. The following test conditions are met.*

1) *Any control that serves to limit the temperature in NORMAL CONDITION, except a THERMAL CUT-OUT, is disabled.*

2) *If the ME EQUIPMENT is provided with more than one control, they are disabled in turn.*

3) *The ME EQUIPMENT is operated at the RATED DUTY CYCLE until THERMAL STABILITY is achieved, irrespective of the RATED operating time.*

13.2.13.3 ME EQUIPMENT with motors

a) *ME EQUIPMENT having motors is checked for compliance as follows:*

1) *For the motor part of the ME EQUIPMENT, compliance is checked by the tests of 13.2.8 to 13.2.10 (inclusive), 13.2.13.3 b), 13.2.13.3 c) and 13.2.13.4, as applicable. For motors located in circuits with a voltage not exceeding 42,4 V peak a.c. or 60 V d.c. and where difficulty is experienced in obtaining accurate temperature measurements due to the small size or design of the motor, it is permitted to use the following test instead of temperature measurement in order to determine compliance with 13.2.9 and 13.2.10.*

The motor is covered with a single layer of cheesecloth with the following characteristics:

– *bleached cotton material;*

– *26–28 m^2 per kg mass; and*

– *13 threads per cm in one direction and 11 threads per cm in the other.*

Ignition of the cheesecloth during the test or at its conclusion constitutes a failure.

2) *For ME EQUIPMENT that also contains heating parts, the tests are performed at the prescribed voltage, with the motor part and the heating part operated simultaneously so as to produce the least favourable condition.*

3) *If more than one of the tests is applicable for the same ME EQUIPMENT, these tests are performed consecutively.*

b) *Motors are checked for running overload protection if they are:*

1) *intended to be remotely controlled or automatically controlled (by a single control device without redundant protection), or*

2) *likely to be subjected to CONTINUOUS OPERATION whilst unattended.*

Compliance is determined by operating the ME EQUIPMENT under normal load conditions at RATED voltage or at the maximum of the RATED voltage range, until THERMAL STABILITY is achieved (see 11.1.3).

The load is then increased so that the current is increased in appropriate steps, the supply voltage being maintained at its original value.

When THERMAL STABILITY is established, the load is again increased. The load is thus progressively increased in appropriate steps until the overload protection operates, or until no further temperature rise is noted.

Copyright International Electrotechnical Commission
Provided by IHS Markit under license with IEC
No reproduction or networking permitted without license from IHS Not for Resale, 08/26/2020 19:12:41 MDT

The motor winding temperature is determined during each steady period. If the maximum value recorded exceeds the value in Table 27, it constitutes a failure.

Table 27 – Maximum motor winding steady-state temperature

Insulation class	Maximum temperature °C
A	140
B	165
E	155
F	180
H	200

If the load cannot be changed in appropriate steps in ME EQUIPMENT, the motor is removed from the ME EQUIPMENT in order to perform the test.

The running overload test for motors located in circuits with a voltage not exceeding 42,4 V peak a.c. or 60 V d.c. is performed only if a possibility of an overload occurring is determined by inspection or by review of the design. The test need not be performed, for example, where electronic drive circuits maintain a substantially constant drive current.

c) *ME EQUIPMENT with three-phase motors is operated with normal load, connected to a three-phase (SUPPLY MAINS) with one phase disconnected. Periods of operation are according to 13.2.10.*

13.2.13.4 * ME EQUIPMENT RATED for non-CONTINUOUS OPERATION

ME EQUIPMENT RATED for non-CONTINUOUS OPERATION other than:

– *HAND-HELD ME EQUIPMENT*;

– *ME EQUIPMENT that has to be kept switched on manually;*

– *ME EQUIPMENT that has to be kept under physical load by hand;*

– *ME EQUIPMENT with a timer and a back-up timer system*

is operated under normal load and at RATED voltage or at the upper limit of the RATED voltage range until the peak temperature does not increase by more than 5 °C in one hour, or until any protective device operates.

Motor winding temperatures are determined when THERMAL STABILITY is established or immediately before the operation of the protective device. Motor winding temperatures that exceed the values specified in 13.2.10 constitute a failure.

If in NORMAL USE a load-reducing device in the ME EQUIPMENT operates, the test is continued with the ME EQUIPMENT running idle.

14 * PROGRAMMABLE ELECTRICAL MEDICAL SYSTEMS (PEMS)

14.1 * General

The requirements in 14.2 to 14.12 (inclusive) shall apply to PEMS unless:

– none of the PROGRAMMABLE ELECTRONIC SUBSYSTEM (PESS) provides functionality necessary for BASIC SAFETY or ESSENTIAL PERFORMANCE; or

– the application of RISK MANAGEMENT as described in 4.2 demonstrates that the failure of any PESS does not lead to an unacceptable RISK.

The requirements in 14.13 are applicable to any PEMS intended to be incorporated into an IT-NETWORK whether or not the requirements in 14.2 to 14.12 apply.

Copyright International Electrotechnical Commission
Provided by IHS Markit under license with IEC
No reproduction or networking permitted without license from IHS Not for Resale, 08/26/2020 19:12:41 MDT

NOTE 1 This clause requires that a PROCESS be followed throughout the PEMS DEVELOPMENT LIFE-CYCLE and that a RECORD of that PROCESS be produced. The concepts of RISK MANAGEMENT and a PEMS DEVELOPMENT LIFE-CYCLE are the basis of such a PROCESS. However, because a RISK MANAGEMENT PROCESS is already required by this standard, this clause will define the minimum elements of the PEMS DEVELOPMENT LIFE-CYCLE and only the additional elements for the PEMS that needs to be considered as part of the RISK MANAGEMENT PROCESS (see 4.2).

NOTE 2 If a RISK CONTROL measure is implemented within the PESS, it is necessary to apply Clause 14 to demonstrate that the failure of the PESS does not lead to an unacceptable RISK.

NOTE 3 It is recognized that the MANUFACTURER might not be able to follow all the PROCESSES identified in Clause 14 for each constituent component of the PEMS, such as software of unknown provenance (SOUP), subsystems of non-medical origin, and legacy devices. In this case, the MANUFACTURER should take special account of the need for additional RISK CONTROL measures. SOUP is defined in IEC 62304:2006/AMD1:2015 as a "software item that is already developed and generally available and that has not been developed for the purpose of being incorporated into the medical device (also known as 'off-the-shelf software') or software item previously developed for which adequate RECORDS of the development PROCESSES are not available".

Compliance is determined by inspection of all documentation required, and when necessary, assessment of the requirements in 14.2 to 14.13 (inclusive).

NOTE 4 This assessment could be performed by internal audit.

When the requirements in 14.2 to 14.13 apply, the requirements in subclause 4.3, Clause 5, Clause 7, Clause 8 and Clause 9 of IEC 62304:2006 and IEC 62304:2006/AMD1:2015 shall also apply to the development or modification of software for each PESS.

Compliance is determined by inspection and assessment as required by subclause 1.4 of IEC 62304:2006 and IEC 62304:2006/AMD1:2015.

NOTE 5 The software development PROCESS required for compliance with this standard does not include the post-production monitoring and maintenance required by Clause 6 of IEC 62304:2006:2006 and IEC 62304:2006/AMD1:2015.

14.2 * Documentation

The documents required by Clause 14 shall be reviewed, approved, issued and changed in accordance with a formal document control PROCEDURE.

14.3 * RISK MANAGEMENT plan

The RISK MANAGEMENT plan required by 4.2.2 shall also include a reference to the PEMS VALIDATION plan (see 14.11).

14.4 * PEMS DEVELOPMENT LIFE-CYCLE

A PEMS DEVELOPMENT LIFE-CYCLE shall be documented.

NOTE Clause H.2 explains PEMS DEVELOPMENT LIFE-CYCLE in more detail.

The PEMS DEVELOPMENT LIFE-CYCLE shall include a set of defined milestones.

At each milestone, the activities to be completed and the VERIFICATION methods to be applied to those activities shall be defined.

Each activity shall be defined including its inputs and outputs.

Each milestone shall identify the RISK MANAGEMENT activities that must be completed before that milestone.

The PEMS DEVELOPMENT LIFE-CYCLE shall be tailored for a specific development by making plans which detail activities and milestones.

The PEMS DEVELOPMENT LIFE-CYCLE shall include documentation requirements.

14.5 * Problem resolution

Where appropriate, a documented system for problem resolution within and between all phases and activities of the PEMS DEVELOPMENT LIFE-CYCLE shall be developed and maintained.

Copyright International Electrotechnical Commission
Provided by IHS Markit under license with IEC
No reproduction or networking permitted without license from IHS Not for Resale, 08/26/2020 19:12:41 MDT

Depending on the type of product, the problem resolution system may:

– be documented as a part of the PEMS DEVELOPMENT LIFE-CYCLE;

– allow the reporting of potential or existing problems affecting BASIC SAFETY or ESSENTIAL PERFORMANCE;

– include an assessment of each problem for associated RISKS;

– identify the criteria that must be met for the issue to be closed;

– identify the action to be taken to resolve each problem.

14.6 RISK MANAGEMENT PROCESS

14.6.1 * Identification of known and foreseeable HAZARDS

When compiling the list of known or foreseeable HAZARDS, the MANUFACTURER shall consider those HAZARDS associated with software and hardware aspects of the PEMS including those associated with the incorporation of the PEMS into an IT-NETWORK, components of third-party origin and legacy subsystems.

NOTE In addition to the material given in Annex C of ISO 14971:2019, the list of possible causes for HAZARDS associated with PEMS can include:

– undesired feedback [physical and data] (possibilities include: unsolicited input, out of range or inconsistent input, and input originating from electromagnetic interference);

– unavailable data;

– lack of integrity of data;

– incorrect data;

– incorrect timing of data.

– unintended interactions within and among PESS;

– unknown aspects or quality of third-party software;

– unknown aspects or quality of third-party PESS;

– lack of data security, including its effects on data privacy, and particularly vulnerability to tampering, unintended interaction with other programs and viruses.

– failure of the IT-NETWORK to provide the characteristics necessary for the PEMS to achieve its BASIC SAFETY or ESSENTIAL PERFORMANCE. See Annex H.7.2 for examples.

14.6.2 * RISK CONTROL

The following requirements for PEMS supplement 4.2.2.

Suitably validated tools and PROCEDURES shall be selected and identified to implement each RISK CONTROL measure. These tools and PROCEDURES shall be appropriate to assure that each RISK CONTROL measure satisfactorily reduces the identified RISK(S).

14.7 * Requirement specification

For the PEMS and each of its subsystems (e.g. for a PESS) there shall be a documented requirement specification.

NOTE Example structures of a PEMS are given in H.1.

The requirement specification for a system or subsystem shall include and distinguish any ESSENTIAL PERFORMANCE and any RISK CONTROL measures implemented by that system or subsystem.

14.8 * Architecture

For the PEMS and each of its subsystems, an architecture shall be specified that shall satisfy the requirement specification.

Where appropriate, to reduce the RISK to an acceptable level, the architecture specification shall make use of:

a) COMPONENTS WITH HIGH-INTEGRITY CHARACTERISTICS;

Copyright International Electrotechnical Commission
Provided by IHS Markit under license with IEC
No reproduction or networking permitted without license from IHS Not for Resale, 08/26/2020 19:12:41 MDT

b) fail-safe functions;

c) redundancy;

d) diversity;

e) * partitioning of functionality;

f) defensive design, e.g. limits on potentially hazardous effects by restricting the available output power or by introducing means to limit the travel of actuators.

The architecture specification shall take into consideration:

g) * allocation of RISK CONTROL measures to subsystems and components of the PEMS;

NOTE Subsystems and components include sensors, actuators, PESS and interfaces.

h) failure modes of components and their effects;

i) common cause failures;

j) systematic failures;

k) test interval duration and diagnostic coverage;

l) maintainability;

m) protection from reasonably foreseeable misuse;

n) the IT-NETWORK specification, if applicable.

14.9 * Design and implementation

Where appropriate, the design shall be decomposed into subsystems, each having both a design and test specification.

Descriptive data regarding the design environment shall be documented.

NOTE See H.4 a) for examples of design environment elements.

14.10 * VERIFICATION

VERIFICATION is required for all functions that implement BASIC SAFETY, ESSENTIAL PERFORMANCE or RISK CONTROL measures.

A VERIFICATION plan shall be produced to show how these functions shall be verified. The plan shall include:

– at which milestone(s) VERIFICATION is to be performed for each function;

– the selection and documentation of VERIFICATION strategies, activities, techniques, and the appropriate level of independence of the personnel performing the VERIFICATION;

– the selection and utilization of VERIFICATION tools;

– coverage criteria for VERIFICATION.

NOTE Examples of methods and techniques are:

– walkthroughs;

– inspections;

– static analysis;

– dynamic analysis;

– white box testing;

– black box testing;

– statistical testing.

The VERIFICATION shall be performed according to the VERIFICATION plan. The results of the VERIFICATION activities shall be documented.

14.11 * PEMS VALIDATION

A PEMS VALIDATION plan shall include the validation of BASIC SAFETY and ESSENTIAL PERFORMANCE.

Copyright International Electrotechnical Commission
Provided by IHS Markit under license with IEC
No reproduction or networking permitted without license from IHS Not for Resale, 08/26/2020 19:12:41 MDT

Methods used for PEMS VALIDATION shall be documented.

The PEMS VALIDATION shall be performed according to the PEMS VALIDATION plan. The results of PEMS VALIDATION activities shall be documented.

The person having the overall responsibility for the PEMS VALIDATION shall be independent of the design team. The MANUFACTURER shall document the rationale for the level of independence.

No member of a design team shall be responsible for the PEMS VALIDATION of their own design.

All professional relationships of the members of the PEMS VALIDATION team with members of the design team shall be documented in the RISK MANAGEMENT FILE.

14.12 * Modification

If any or all of a design results from a modification of an earlier design then either all of this clause applies as if it were a new design or the continued validity of any previous design documentation shall be assessed under a documented modification/change PROCEDURE.

When software is modified, the requirements in subclause 4.3 and 4.4, Clause 5, Clause 7, Clause 8 and Clause 9 of IEC 62304:2006 and IEC 62304:2006/AMD1:2015 shall also apply to the modification.

14.13 * PEMS intended to be incorporated into an IT-NETWORK

If the PEMS is intended to be incorporated into an IT-NETWORK that is not validated by the PEMS MANUFACTURER, the MANUFACTURER shall make available instructions for implementing such connection including the following:

a) the purpose of the PEMS's connection to an IT-NETWORK;

b) the required characteristics of the IT-NETWORK incorporating the PEMS;

c) the required configuration of the IT-NETWORK incorporating the PEMS;

d) the technical specifications of the network connection of the PEMS including security specifications;

e) the intended information flow between the PEMS, the IT-NETWORK and other devices on the IT-NETWORK, and the intended routing through the IT-NETWORK; and

NOTE 1 This can include aspects of effectiveness and data and system security as related to BASIC SAFETY and ESSENTIAL PERFORMANCE (see also Clause H.6 and IEC 80001-1:2010).

f) a list of the HAZARDOUS SITUATIONS resulting from a failure of the IT-NETWORK to provide the characteristics required to meet the purpose of the PEMS connection to the IT-NETWORK.

NOTE 2 Connecting a PEMS to another piece of equipment for the purpose of transferring data creates a two-node IT-NETWORK. For example, connecting a PEMS to a printer creates an IT-NETWORK. If the MANUFACTURER has validated the PEMS with the printer, the resulting network would be considered within the control of the MANUFACTURER.

Compliance is checked by inspection of the instructions.

In the ACCOMPANYING DOCUMENTS, the MANUFACTURER shall instruct the RESPONSIBLE ORGANIZATION that:

– connection of the PEMS to an IT-NETWORK that includes other equipment could result in previously unidentified RISKS to PATIENTS, OPERATORS or third parties;

– the RESPONSIBLE ORGANIZATION should identify, analyze, evaluate and control these RISKS;

NOTE 3 IEC 80001-1:2010 provides guidance for the RESPONSIBLE ORGANIZATION to address these RISKS.

– subsequent changes to the IT-NETWORK could introduce new RISKS and require additional analysis; and

Copyright International Electrotechnical Commission
Provided by IHS Markit under license with IEC
No reproduction or networking permitted without license from IHS Not for Resale, 08/26/2020 19:12:41 MDT

– changes to the IT-NETWORK include:
  - changes in the IT-network configuration;
  - connection of additional items to the IT-NETWORK;
  - disconnecting items from the IT-NETWORK;
  - update of equipment connected to the IT-NETWORK; and
  - upgrade of equipment connected to the IT-NETWORK.

Compliance is checked by inspection of the ACCOMPANYING DOCUMENTS.

15 Construction of ME EQUIPMENT

15.1 * Arrangements of controls and indicators of ME EQUIPMENT

When applicable, the MANUFACTURER shall address the RISKS associated with the arrangement of controls and indicators of ME EQUIPMENT in the USABILITY ENGINEERING PROCESS. See 12.2.

Compliance is checked as specified in IEC 60601-1-6:2010, IEC 60601-1-6:2010/AMD1:2013 and IEC 60601-1-6:2010/AMD2:2020.

15.2 * Serviceability

Parts of ME EQUIPMENT subject to mechanical wear, electrical and environmental degradation or ageing that could result in an unacceptable RISK if allowed to continue unchecked for too long a period shall be accessible for inspection, replacement and maintenance.

Parts of ME EQUIPMENT that are likely to be replaced or adjusted shall be so located and secured as to permit inspection, servicing, replacement and adjustment without damage to, or interference with, adjacent parts or wiring.

Compliance is checked by inspection of the parts mentioned above in this subclause and of their location.

15.3 Mechanical strength

15.3.1 General

ME EQUIPMENT or its parts shall have adequate mechanical strength and shall not result in loss of BASIC SAFETY or ESSENTIAL PERFORMANCE due to moulding stress or when subjected to mechanical stress caused by pushing, impact, dropping, and rough handling.

Compliance is checked by application of the tests in Table 28. The tests are not applied to handles, levers, knobs, the face of cathode ray tubes (see 9.5.2), or to transparent or translucent covers of indicating or measuring devices unless with the handle, lever, knob, or cover removed there is an unacceptable RISK of electric shock.

NOTE Examples of damage that can affect BASIC SAFETY include the reduction of CREEPAGE DISTANCES and AIR CLEARANCES below those specified in 8.9, access to parts which exceed limits in 8.4, or access to moving parts which could cause HARM.

Assessment criteria that can be useful in determining if this test has resulted in loss of BASIC SAFETY include:

– those in Clause 8 and 11.6;

– the dielectric strength test as specified in 8.8.3 to evaluate the integrity of solid INSULATION providing a MEANS OF PROTECTION; and

– measurement of CREEPAGE DISTANCES or AIR CLEARANCES to compare the values with the minimum distances specified in 8.9. Small chips that do not adversely affect the protection against electric shock or moisture can normally be ignored.

Copyright International Electrotechnical Commission
Provided by IHS Markit under license with IEC
No reproduction or networking permitted without license from IHS Not for Resale, 08/26/2020 19:12:41 MDT

Table 28 – Mechanical strength test applicability

ME EQUIPMENT type	Test
HAND-HELD	Push (15.3.2)
	Drop (15.3.4.1)
	Moulding stress relief (15.3.6)
BODY-WORN	Push (15.3.2)
	Impact (15.3.3)
	Drop (15.3.4.1)
	Moulding stress relief (15.3.6)
PORTABLE	Push (15.3.2)
	Impact (15.3.3)
	Drop (15.3.4.2)
	Moulding stress relief (15.3.6)
MOBILE	Push (15.3.2)
	Impact (15.3.3)
	Rough handling (15.3.5)
	Moulding stress relief (15.3.6)
FIXED or STATIONARY	Push (15.3.2)
	Impact (15.3.3)
	Moulding stress relief (15.3.6)

15.3.2 * Push test

ENCLOSURES of ME EQUIPMENT shall have sufficient rigidity to protect against unacceptable RISK.

Compliance is checked by the following test.

External parts of an ENCLOSURE are subject to a steady force of 250 N ± 10 N for a period of 5 s, applied by means of a suitable test tool providing contact over a circular plane surface 30 mm in diameter. However, this test is not applied to the bottom of an ENCLOSURE of ME EQUIPMENT having a mass of more than 18 kg.

After the test, any damage sustained that results in an unacceptable RISK constitutes a failure.

NOTE See the compliance criteria in 15.3.1.

15.3.3 * Impact test

ENCLOSURES of ME EQUIPMENT shall have sufficient resistance to impact to protect against unacceptable RISK.

Compliance is checked by the following test.

Except for HAND-HELD ME EQUIPMENT and ME EQUIPMENT parts that are HAND-HELD, ENCLOSURES and other external insulating parts, the deterioration of which could result in unacceptable RISK, are tested as indicated below.

A sample consisting of the complete ENCLOSURE, or a portion thereof representing the largest unreinforced area, is supported in its normal position. A solid smooth steel ball, approximately 50 mm in diameter and with a mass of 500 g ± 25 g, is permitted to fall freely from a 1,3 m height once onto each relevant part of the test sample.

Copyright International Electrotechnical Commission
Provided by IHS Markit under license with IEC
No reproduction or networking permitted without license from IHS Not for Resale, 08/26/2020 19:12:41 MDT

To test vertical surfaces, the steel ball is suspended by a cord and allowed to swing like a pendulum in order to apply a horizontal impact, dropping though a vertical distance of 1,3 m once against each relevant part of the test sample.

The test is not applied to flat panel displays, to the platen glass of ME EQUIPMENT (for example film scanners), or to cathode ray tubes (see 9.5.2).

After the test, any damage sustained that results in an unacceptable RISK constitutes a failure.

NOTE See the compliance criteria in 15.3.1.

15.3.4 * Drop test

15.3.4.1 HAND-HELD ME EQUIPMENT

HAND-HELD ME EQUIPMENT, ACCESSORIES and ME EQUIPMENT parts shall not result in an unacceptable RISK as a result of a free fall.

Compliance is checked by the following test.

The sample to be tested, with any SAFE WORKING LOAD in place, is allowed to fall freely once from each of three different starting orientations encountered during NORMAL USE from the height at which the ME EQUIPMENT, ACCESSORY or ME EQUIPMENT part is used (as specified in the ACCOMPANYING DOCUMENTS), or from a height of 1 m, whichever is greater, onto a 50 mm ± 5 mm thick hardwood board (for example, hardwood density > 600 kg/m^3) lying flat on a concrete or a similar rigid base.

After the test, the HAND-HELD ME EQUIPMENT, ACCESSORY or ME EQUIPMENT part shall not result in an unacceptable RISK.

15.3.4.2 * PORTABLE ME EQUIPMENT

PORTABLE ME EQUIPMENT, ACCESSORIES and ME EQUIPMENT parts shall withstand the stress caused by a free fall from the height indicated in Table 29 onto a hard surface.

Compliance is checked by the following test.

The sample to be tested, with the SAFE WORKING LOAD in place, is lifted to a height as indicated in Table 29 above a 50 mm ± 5 mm thick hardwood board (for example, hardwood density > 600 kg/m3) that lies flat on a concrete floor or a similar rigid base. The dimensions of the board are at least those of the sample tested. The sample is dropped three times from each orientation in which it can be placed during NORMAL USE.

Table 29 – Drop height

Mass (*m*) of PORTABLE ME EQUIPMENT or its parts kg	**Drop height** cm
$m \leq 10$	5
$10 < m \leq 50$	3
$m > 50$	2

Copyright International Electrotechnical Commission
Provided by IHS Markit under license with IEC
No reproduction or networking permitted without license from IHS Not for Resale, 08/26/2020 19:12:41 MDT

After the test, any damage sustained that results in a unacceptable RISK constitutes a failure.

NOTE See the compliance criteria in 15.3.1.

15.3.5 * Rough handling test

MOBILE ME EQUIPMENT and ME EQUIPMENT parts that are MOBILE shall withstand the stress caused by rough handling and movement and shall not result in an unacceptable RISK.

Compliance is checked by the following tests.

The sample is tested in transport position with any SAFE WORKING LOAD in place and in the most adverse condition permitted in NORMAL USE. During the test, suitable precautions shall be taken to prevent over-balance caused by the rough handling stress/shock.

a) Ascending step shock

The sample is pushed three times in its normal direction of travel at a speed of 0,8 m/s ± 0,1 m/s, or, for motor-driven MOBILE ME EQUIPMENT, at the maximum speed capable of being maintained, against a solid hardwood plane obstruction with a face of 40 mm ± 2 mm that is rigidly attached to an otherwise flat floor. The direction of movement is perpendicular to the face of the obstacle. The sample need not go over the 40 mm ± 2 mm obstruction.

b) Descending step shock

The sample is pushed three times in its normal direction of travel at a speed of 0,8 m/s ± 0,1 m/s, or, for motor-driven MOBILE ME EQUIPMENT, at the maximum speed capable of being maintained, in order to fall over a vertical step having a height of 40 mm ± 2 mm affixed flat on a rigid base (e.g. concrete). The direction of movement is perpendicular to the face of the descending step.

During performance of the descending step shock test, if a part other than the castor comes in contact with the obstruction before the castor touches the ground, the ME EQUIPMENT continues to be pushed until it has fully descended.

c) Door frame shock

The sample is moved three times in its normal direction of travel at a speed of 0,8 m/s ± 0,1 m/s, or, for motor driven MOBILE ME EQUIPMENT, the maximum speed capable of being maintained, against a hardwood vertical obstacle having a width and thickness of 40 mm ± 2 mm affixed to a vertical rigid support (e.g. concrete). The height of the vertical obstacle must be higher than the ME EQUIPMENT contact point(s). The direction of movement is perpendicular to the face of the obstacle.

After each test, any damage sustained that results in an unacceptable RISK constitutes a failure.

NOTE 1 See compliance criteria in 15.3.1.

NOTE 2 Instability of ME EQUIPMENT, when the ME EQUIPMENT remains undamaged from the rough handling shock/stress, is evaluated in accordance with 9.4.

15.3.6 * Mould stress relief test

ENCLOSURES of moulded or formed thermoplastic materials shall be so constructed that any shrinkage or distortion of the material due to release of internal stresses caused by the moulding or forming operation does not result in an unacceptable RISK.

Compliance is checked by inspection of the construction and available data were appropriate or by the following test.

One sample consisting of the complete ME EQUIPMENT, or of the ENCLOSURE together with any supporting framework, is placed in a circulating air oven at a temperature 10 °C higher than

Copyright International Electrotechnical Commission
Provided by IHS Markit under license with IEC
No reproduction or networking permitted without license from IHS Not for Resale, 08/26/2020 19:12:41 MDT

the maximum temperature observed on the ENCLOSURE during the test of 11.1.3, but not less than 70 °C, for a period of 7 h, then permitted to cool to room temperature.

NOTE Relative humidity need not be maintained at a specific value during this conditioning.

For large ME EQUIPMENT where it is not practical to condition a complete ENCLOSURE, it is permitted to use a portion of the ENCLOSURE representative of the complete assembly with regard to thickness and shape, including any mechanical support members.

Any damage that results in an unacceptable RISK constitutes a failure.

15.3.7 * Environmental influences

The selection and treatment of materials used in the construction of ME EQUIPMENT shall take account of the INTENDED USE, the EXPECTED SERVICE LIFE and the conditions for transport and storage.

The ME EQUIPMENT shall be so designed and constructed that during its EXPECTED SERVICE LIFE any corrosion, ageing, mechanical wear, or degradation of biological materials due to the influence of bacteria, plants, animals and the like, shall not reduce its mechanical properties in a way that results in an unacceptable RISK. See also 15.2.

Compliance is checked by inspection:

– *of the ME EQUIPMENT, of the ACCOMPANYING DOCUMENTS and of the MANUFACTURER'S specifications of materials used and of the processing specifications for these materials;*

– *of the MANUFACTURER'S relevant tests or calculations.*

15.4 ME EQUIPMENT components and general assembly

15.4.1 Construction of connectors

Design and construction of electrical, hydraulic, pneumatic and gas connection terminals and connectors of ME EQUIPMENT shall be such that incorrect connection of accessible connectors, removable without the use of a TOOL, shall be prevented where an unacceptable RISK would otherwise exist. In particular:

a) Plugs for connection of PATIENT leads or PATIENT cables shall be so designed that they cannot be connected to outlets on the same ME EQUIPMENT intended for other functions, unless it can be proven that no unacceptable RISK can result.

   Compliance is checked by inspection of PATIENT leads, PATIENT cables, connectors and outlets and, if interchange of the leads, cables, connectors or outlets is possible, by inspection of the RISK MANAGEMENT FILE.

b) Medical gas connections on ME EQUIPMENT for different gases to be operated in NORMAL USE shall not be interchangeable. See also ISO 407 [27].

Compliance is checked by inspection of all medical gas connectors.

15.4.2 Temperature and overload control devices

15.4.2.1 Application

a) THERMAL CUT-OUTS and OVER-CURRENT RELEASES with automatic resetting shall not be used in ME EQUIPMENT if their use could lead to a HAZARDOUS SITUATION described in 13.1 by such resetting.

   Compliance is checked by inspection of the design documentation and the RISK MANAGEMENT FILE.

b) THERMAL CUT-OUTS with a safety function that have to be reset by a soldering operation that can affect the operating value shall not be fitted in ME EQUIPMENT.

Copyright International Electrotechnical Commission
Provided by IHS Markit under license with IEC
No reproduction or networking permitted without license from IHS Not for Resale, 08/26/2020 19:12:41 MDT

Compliance is checked by inspection of the design documentation.

c) In ME EQUIPMENT, where a failure of a THERMOSTAT could lead to a HAZARDOUS SITUATION described in 13.1, an independent non-SELF-RESETTING THERMAL CUT-OUT shall additionally be provided. The temperature of operation of the additional device shall be outside that attainable at the extreme setting of the normal control device (THERMOSTAT) but shall be within the safe temperature limit for the intended function of the ME EQUIPMENT .

Compliance is checked by inspection of the design documentation and the RISK MANAGEMENT FILE.

d) Loss of function of the ME EQUIPMENT caused by operation of a THERMAL CUT-OUT or OVER-CURRENT RELEASE shall not result in the loss of ESSENTIAL PERFORMANCE or any of the HAZARDOUS SITUATIONS described in 13.1.

Compliance is checked by inspection of the design documentation and the RISK MANAGEMENT FILE.

e) Capacitors or other spark-suppression devices of ME EQUIPMENT shall not be connected between the contacts of THERMAL CUT-OUTS.

Compliance is checked by inspection.

f) The use of a THERMAL CUT-OUT or OVER-CURRENT RELEASE in the design shall not affect the safety of the ME EQUIPMENT.

Compliance is checked by inspection and, if applicable, by the following tests.

Verify compliance of positive temperature coefficient devices (PTC's) with IEC 60730-1:2010, clauses 15, 17, J.15 and J.17 as applicable.

THERMAL CUT-OUTS and OVER-CURRENT RELEASES are tested by operating the ME EQUIPMENT under the conditions described in Clause 13.

SELF-RESETTING THERMAL CUT-OUTS and self-resetting OVER-CURRENT RELEASES including circuits that perform equivalent functions (other than PTC's) are caused to operate 200 times unless approved to the appropriate IEC component standard.

Manual reset THERMAL CUT-OUTS and OVER-CURRENT RELEASES are caused to operate 10 times, if they are not approved to the appropriate IEC component standard (see 4.5) or the MANUFACTURER has not provided adequate data to demonstrate the reliability of the component to perform its safety-related function.

Thermal protection devices can be tested separately from ME EQUIPMENT where engineering judgement indicates that doing so would not impact the test results.

g) ME EQUIPMENT that incorporates a fluid filled container having heating facilities shall be provided with a protection device to safeguard against overheating in the event of the heater being switched on with the container empty. An unacceptable RISK shall not occur from overheating.

Compliance is checked by operating the relevant ME EQUIPMENT with an empty container until the protection device activates.

h) ME EQUIPMENT that incorporates tubular heating elements shall have protection against overheating in both leads where a conductive connection to earth could result in overheating.

Compliance is checked by inspection of the design documentation and the RISK MANAGEMENT FILE.

Copyright International Electrotechnical Commission
Provided by IHS Markit under license with IEC
No reproduction or networking permitted without license from IHS Not for Resale, 08/26/2020 19:12:41 MDT

15.4.2.2 Temperature settings

Where means are provided for varying the temperature setting of THERMOSTATS in ME EQUIPMENT, the temperature setting shall be clearly indicated.

Compliance is checked by inspection.

15.4.3 * Batteries

15.4.3.1 Housing

In ME EQUIPMENT, housings containing batteries from which gases can escape during charging or discharging shall be ventilated so that there is no unacceptable RISK from the accumulation of gases and possible ignition is prevented.

Battery compartments of ME EQUIPMENT shall be designed to prevent accidental short circuiting of the battery where such short circuits could result in the HAZARDOUS SITUATIONS described in 13.1.

Compliance is checked by inspection of the design documentation and the RISK MANAGEMENT FILE.

15.4.3.2 Connection

If a HAZARDOUS SITUATION might develop by the incorrect connection or replacement of a battery, ME EQUIPMENT shall be fitted with a means of preventing incorrect polarity of connection. See also 7.3.3 and 8.2.2.

Compliance is checked by inspection.

15.4.3.3 Protection against overcharging

Where overcharging of any battery of ME EQUIPMENT could result in an unacceptable RISK, the design shall prevent overcharging.

Compliance is checked by inspection of the design documentation.

15.4.3.4 Lithium batteries

Primary lithium batteries shall comply with the requirements of IEC 60086-4. Secondary lithium batteries shall comply with the requirements of IEC 62133 or IEC 62133-2. See also 7.3.3.

NOTE Batteries includes both single cells and assemblies of cells, i.e. battery packages.

Compliance is checked by inspection of the battery design documentation or by performance of the tests identified in IEC 60086-4 for primary lithium batteries and IEC 62133 or IEC 62133-2 for secondary lithium batteries.

15.4.3.5 * Excessive current and voltage protection

An INTERNAL ELECTRICAL POWER SOURCE in ME EQUIPMENT shall be provided with an appropriately RATED device for protection against fire caused by excessive currents if the cross-sectional area and layout of the internal wiring or the rating of connected components can give rise to a fire in case of a short circuit. Protective devices shall have adequate breaking capacity to interrupt the maximum fault current (including short-circuit current) which can flow. Justification for omission of fuses or OVER-CURRENT RELEASES shall be documented.

The short circuit test between the positive pole and the negative pole of an INTERNAL ELECTRICAL POWER SOURCE in the area between the INTERNAL ELECTRICAL POWER SOURCE output contacts and the subsequent protection device may be omitted if two MEANS OF OPERATOR PROTECTION are provided. Alternatively, a short-circuit test shall not result in any of the HAZARDOUS SITUATIONS in 13.1.2.

--`,,```,,,,````-`-`,,`,,`,`,,`---

Copyright International Electrotechnical Commission
Provided by IHS Markit under license with IEC
No reproduction or networking permitted without license from IHS Not for Resale, 08/26/2020 19:12:41 MDT

Compliance is checked by inspection for the presence of protective means, and if necessary, by inspection of the design documentation. Alternatively, conduct the short-circuit test and none of the HAZARDOUS SITUATIONS in 13.1.2 shall occur.

15.4.4 * Indicators

Unless it is otherwise apparent to the OPERATOR from the normal operating position, indicator lights shall be provided to indicate that ME EQUIPMENT is ready for NORMAL USE. The marking of 7.4.1 is not sufficient for this purpose.

If equipped with a stand-by state or a warm-up state whose duration exceeds 15 s, the ME EQUIPMENT shall be provided with an additional indicator light unless it is otherwise apparent to the OPERATOR from the normal operating position.

Indicator lights shall be provided on ME EQUIPMENT incorporating non-luminous heaters to indicate that the heaters are operational, if a HAZARDOUS SITUATION could exist unless it is otherwise apparent to the OPERATOR from the normal operating position.

NOTE This does not apply to heated stylus-pens for recording purposes.

Indicator lights shall be provided on ME EQUIPMENT to indicate that an output exists where an accidental or prolonged operation of the output circuit could constitute a HAZARDOUS SITUATION.

Colours of indicator lights are described in 7.8.1.

In ME EQUIPMENT incorporating a means for charging an INTERNAL ELECTRICAL POWER SOURCE, the charging mode shall be visibly indicated to the OPERATOR.

Compliance is checked by inspection of the presence and function of indicating means visible from the position of NORMAL USE.

15.4.5 Pre-set controls

When applicable, the MANUFACTURER shall address in the RISK MANAGEMENT PROCESS the RISKS associated with pre-set controls.

Compliance is checked by inspection of the RISK MANAGEMENT FILE.

15.4.6 Actuating parts of controls of ME EQUIPMENT

15.4.6.1 Fixing, prevention of maladjustment

a) All actuating parts of ME EQUIPMENT shall be so secured that they cannot be pulled off or work loose during NORMAL USE.

b) Controls shall be so secured that the indication of any scale always corresponds with the position of the control.

c) Incorrect connection of the indicating device to the relevant component shall be prevented by an adequate construction, if it can be separated without the use of a TOOL.

Compliance is checked by inspection and tests. For rotating controls, the torques as shown in Table 30 are applied between the control knob and the shaft for not less than 2 s in each direction alternately. The test is repeated 10 times.

A knob that rotates with respect to the shaft constitutes a failure.

If an axial pull is required in NORMAL USE, compliance is checked by applying for 1 min an axial force of 60 N for electrical components and 100 N for other components.

--`,,`,,`-`-`,,`,,`,`,,`---

Copyright International Electrotechnical Commission
Provided by IHS Markit under license with IEC
No reproduction or networking permitted without license from IHS Not for Resale, 08/26/2020 19:12:41 MDT

Table 30 – Test torques for rotating controls

Gripping diameter (*d*) of control knob mm [a]	**Torque** Nm
$10 \leq d < 23$	1,0
$23 \leq d < 31$	2,0
$31 \leq d < 41$	3,0
$41 \leq d < 56$	4,0
$56 \leq d \leq 70$	5,0
$d > 70$	6,0
[a] The gripping diameter (*d*) is the maximum width of a control knob regardless of its shape (e.g. control knob with pointer).	

15.4.6.2 Limitation of movement

Stops of adequate mechanical strength shall be provided on rotating or movable parts of controls of ME EQUIPMENT, where necessary to prevent an unexpected change from maximum to minimum, or vice-versa, of the controlled parameter.

Compliance is checked by inspection and manual tests. For rotating controls, the torques as shown in Table 30 are applied for not less than 2 s in each direction alternately. The test is repeated 10 times.

If an axial pull is likely to be applied to the rotating or movable parts of controls of ME EQUIPMENT in NORMAL USE there shall be no unexpected change of the controlled parameter.

Compliance is checked by applying for 1 min an axial force of 60 N for electrical components and 100 N for other components.

15.4.7 Cord-connected HAND-HELD and foot-operated control devices (see also 8.10.4)

15.4.7.1 Mechanical strength

a) HAND-HELD control devices of ME EQUIPMENT shall comply with 15.3.4.1.

b) Foot-operated control devices of ME EQUIPMENT shall be able to support the weight of an adult human being.

Compliance is checked by application to the foot-operated control device, in its position of NORMAL USE, of an actuating force of 1 350 N for 1 min. The force is applied over an area of 30 mm diameter. There shall be no damage to the device resulting in an unacceptable RISK.

15.4.7.2 Accidental operation of ME EQUIPMENT

HAND-HELD and foot-operated control devices shall not result in an unacceptable RISK by changing their control setting when accidentally placed in an abnormal position.

Compliance is checked by turning the control device in all possible abnormal positions and placing it on a flat surface. Any inadvertent change of control setting resulting in an unacceptable RISK constitutes a failure.

Copyright International Electrotechnical Commission
Provided by IHS Markit under license with IEC
No reproduction or networking permitted without license from IHS Not for Resale, 08/26/2020 19:12:41 MDT

15.4.7.3 * Entry of liquids

a) Foot-operated control devices of ME EQUIPMENT shall be at least IPX1 according to IEC 60529.

Compliance is checked by the tests of IEC 60529.

b) In ME EQUIPMENT, ENCLOSURES of foot operated control devices used in areas such as emergency rooms or operating theatres where liquids are likely to be present at floor level and that contain electrical circuits shall be classified at least IPX6 according to IEC 60529.

Compliance is determined by inspection of the ACCOMPANYING DOCUMENTS, the design documentation and by performing the appropriate tests of IEC 60529.

15.4.8 Internal wiring of ME EQUIPMENT

Aluminium wires of less than 16 mm^2 cross-section shall not be used in ME EQUIPMENT.

Compliance is checked by inspection.

15.4.9 Oil containers

a) Oil containers in PORTABLE ME EQUIPMENT shall be adequately sealed to prevent loss of oil in any position. The container design shall allow for the expansion of the oil.

b) Oil containers in MOBILE ME EQUIPMENT shall be sealed to prevent the loss of oil during transport but may be fitted with a pressure-release device that can operate during NORMAL USE.

c) Partially sealed oil-filled ME EQUIPMENT or its parts shall be provided with means for checking the oil level so that leakage can be detected (see 7.9.3.1).

Compliance is checked by inspection of the ME EQUIPMENT, the technical description, and by manual test.

15.5 * MAINS SUPPLY TRANSFORMERS of ME EQUIPMENT and transformers providing separation in accordance with 8.5

15.5.1 Overheating

15.5.1.1 * Transformers

Transformers of ME EQUIPMENT shall be protected against overheating in the event of short circuit or overload of any output winding.

Compliance is checked by the tests of 15.5.1.2 and 15.5.1.3 as appropriate under the following conditions.

Each winding is tested, in turn, with the following parameters at the most adverse value:

– *primary voltage maintained between 90 % to 110 % of RATED voltage*

– *RATED input frequency*

– *loads on other windings between no load and their NORMAL USE load*

Short circuit or resistive load, as appropriate, is applied at the ends of the windings or at the first point that can be short circuited under SINGLE FAULT CONDITION.

Components intended to prevent overheating of the transformer during short circuit and overload conditions are included as part of the tests of 15.5.1.2 and 15.5.1.3 provided that:

– *the component is one with high-integrity characteristics*, *and*

--`,,`,,`-`-`,,`,,`,`,,`---

Copyright International Electrotechnical Commission
Provided by IHS Markit under license with IEC
No reproduction or networking permitted without license from IHS Not for Resale, 08/26/2020 19:12:41 MDT

– *two MEANS OF OPERATOR PROTECTION are provided between the output contacts of the transformer up to the COMPONENT WITH HIGH-INTEGRITY CHARACTERISTICS.*

During the tests, no winding are to open, no HAZARDOUS SITUATION occurs, and the maximum temperatures of windings are not to exceed the values in Table 31. After the short circuit and overload tests, the transformer is to pass the dielectric strength test (as described in 8.8.3) between primary and secondary windings, between the primary windings and the frame and between the secondary windings and the frame. The tests are performed under the conditions specified in 11.1, either in the ME EQUIPMENT or under simulated conditions on the bench.

Table 31 – Maximum allowable temperatures of transformer windings under overload and short-circuit conditions at 25 °C (± 5 °C) ambient temperature

Parts	Maximum temperature °C
Windings and core laminations in contact therewith, if the winding insulation is:	
– of Class A material	150
– of Class B material	175
– of Class E material	165
– of Class F material	190
– of Class H material	210

15.5.1.2 Short-circuit test

The output winding under test is short circuited. The test is continued until the protective device operates or THERMAL STABILITY is achieved. For transformers not tested according to the 5X frequency and 5X voltage test of 15.5.2 a) or the 2X frequency and 2X voltage test of 15.5.2 b), the short circuit is applied directly across the output windings.

15.5.1.3 Overload test

Windings with more than one protective device could require multiple overload tests in order to fully evaluate worst-case NORMAL USE loading and fusing.

The overload test may be applied after rectification.

If the short-circuit test is completed without operation of a protective device (such as a current limiting circuit), the overload test is not required.

a) This test (a) is performed if the current at which the protective device operates cannot be determined based on a review of the provided protective devices and their performance data; otherwise test b) is performed.

The winding under test is loaded to its NORMAL USE load until THERMAL STABILITY is reached. The load is then progressively adjusted in appropriate steps to approach the minimum current at which the protective device operates. Each adjustment of the load is followed by a sufficient time to reach THERMAL STABILITY, and the load current and temperature are to be noted.

Following operation of a protective device, b) is performed.

b) If the protective device that operated in a) is external to the transformer, it is shunted. The winding under test is loaded based on the type of protective device as follows.

– *Fuse in accordance with IEC 60127-1:*

30 min at the appropriate test current determined from Table 32.

Copyright International Electrotechnical Commission
Provided by IHS Markit under license with IEC
No reproduction or networking permitted without license from IHS Not for Resale, 08/26/2020 19:12:41 MDT

Table 32 – Test current for transformers

Marked value of RATED current (*I*) of protecting fuse-link A	Ratio between test current and RATED current of the fuse-link
$I \leq 4$	2,1
$4 < I \leq 10$	1,9
$10 < I \leq 25$	1,75
$I > 25$	1,6

– *Fuses not in accordance with IEC 60127-1:*

30 min at the current according to the characteristics supplied by the fuse manufacturer, specifically the 30 min clearing-time current. If no 30 min clearing-time current data is available, the test current from Table 32 is used until THERMAL STABILITY is achieved.

– *Other protective device:*

until THERMAL STABILITY at a current just below that which caused the device to operate in a).

This portion of the overload test is concluded at the specified time or when a second protective device opens.

15.5.2 * Dielectric strength

This subclause is not applicable to transformers operating at a frequency above 1 kHz, which are tested in accordance with 8.8.3.

ME EQUIPMENT transformer windings shall have adequate insulation to prevent internal short-circuits that could cause overheating where such overheating could result in a HAZARDOUS SITUATION.

The dielectric strength of the electrical insulation between turns and layers of each winding of a transformer of ME EQUIPMENT where failure of the transformer could result in a HAZARDOUS SITUATION shall be such that after the humidity preconditioning treatment (see 5.7) it passes the following tests.

a) *Transformer windings having a RATED voltage ≤ 500 V or RATED frequency ≤ 60 Hz are tested with a voltage across the winding of five times the RATED voltage or five times the upper limit of the RATED voltage range of that winding and a frequency not less than five times the RATED frequency (where RATED frequency is the normal operating frequency of the transformer input voltage).*

b) *Transformer windings having a RATED voltage exceeding 500 V or RATED frequency exceeding 60 Hz are tested with a voltage across that winding of twice the RATED voltage or twice the upper limit of the RATED voltage range of that winding and a frequency not less than twice the RATED frequency (where RATED frequency is the normal operating frequency of the transformer input voltage).*

In the two cases above, however, the stress on the turn and layer insulation of any winding of the transformer is to be such that the test voltage appearing at the winding with the highest RATED voltage does not exceed the test voltage specified in Table 6, for one MEANS OF PROTECTION, if the RATED voltage of such a winding is considered as the WORKING VOLTAGE. If this should occur, the test voltage on the primary winding is reduced accordingly. The test frequency can be adapted to produce in the core approximately the magnetic induction present in NORMAL USE. Where the core of the transformer is isolated from all external conductive connections (such as in most toroidal transformers), connections to the core described below may be omitted.

Copyright International Electrotechnical Commission
Provided by IHS Markit under license with IEC
No reproduction or networking permitted without license from IHS Not for Resale, 08/26/2020 19:12:41 MDT

– *Three-phase transformers can be tested by means of a three-phase testing device or by three consecutive tests using a single-phase testing device.*

– *The value of the test voltage with respect to the core and to any screen between primary and secondary windings is in accordance with the specification of the relevant transformer. If the primary winding has an identified connection point for the neutral of the SUPPLY MAINS such a point is connected to the core (and screen if present) unless the core (and screen) are specified for connection to an unearthed part of the circuit. To simulate this, the core (and screen) are connected to a source with an appropriate voltage and frequency with respect to the identified connection point.*

  If such a connection point has not been identified, each side of the primary winding in turn is connected to the core (and screen if present) unless the core (and screen) are specified for connection to an unearthed part of the circuit.

  To simulate this, the core (and screen) are connected to a source with an appropriate voltage and frequency with respect to each side of the primary winding in turn.

– *During the test, all windings not intended for connection to the SUPPLY MAINS are left unloaded (open circuit). Windings intended to be earthed at a point or to be operated with a point nearly at earth potential are to have such a point connected to the core, unless the core is specified for connection to an unearthed part of the circuit.*

  To simulate this, the core is connected to a source with an appropriate voltage and frequency with respect to such windings.

– *Initially not more than half the prescribed voltage is applied, then, it is raised over a period of 10 s to the full value, which is then maintained for 1 min, after which the voltage is reduced gradually and switched off.*

– *Tests are not conducted at resonant frequencies.*

Compliance is checked by the following:

During the test, any flashover or breakdown of any part of the insulation constitutes a failure. There is to be no detectable deterioration of the transformer after the test.

Slight corona discharges are neglected, provided that they cease when the test voltage is temporarily dropped to a lower value, that this value is higher than the WORKING VOLTAGE and that the discharges do not provoke a drop in test voltage.

15.5.3 * Construction of transformers used to provide separation as required by 8.5

Transformers of ME EQUIPMENT that form MEANS OF PROTECTION as required by 8.5 shall comply with the following:

– Means shall be provided to prevent displacement of end turns beyond the interwinding insulation.

– If a protective earthed screen has only one turn, it shall have an insulated overlap of not less than 3 mm. The width of the screen shall be at least equal to the axial winding length of the primary winding.

– The exit of the wires from the internal windings of toroidal transformers shall be provided with double sleeving complying with the requirements for two MEANS OF PROTECTION and having a total wall thickness of at least 0,3 mm, extending at least 20 mm outside the winding.

– The insulation between primary and secondary windings shall comply with 8.8.2.

– CREEPAGE DISTANCES and AIR CLEARANCES shall comply with 8.9.4 with the following exceptions:

  - Enamelled or lacquered winding wires are considered as contributing 1 mm each to the CREEPAGE DISTANCES specified in 8.9.4 for MEANS OF PATIENT PROTECTION.

  - CREEPAGE DISTANCES are measured through the joint between two parts of an insulation barrier, except when:

Copyright International Electrotechnical Commission
Provided by IHS Markit under license with IEC
No reproduction or networking permitted without license from IHS Not for Resale, 08/26/2020 19:12:41 MDT

– either the two parts forming the joint are bonded by heat sealing or other similar means at the place where this is of importance;

or

– the joint is completely filled with adhesive at the necessary places and the adhesive bonds to the surfaces of the insulating barrier so that humidity cannot be sucked into the joint.

- CREEPAGE DISTANCES within moulded transformers are considered not to exist if it can be shown that no gas bubbles are present and the thickness of the insulation between enamelled or lacquered primary and secondary windings is at least 1 mm for reference voltages *U* not exceeding 250 V and increased proportionally for higher reference voltages.

Compliance is checked by inspection of the transformer construction and measurement of required distances.

16 * ME SYSTEMS

16.1 * General requirements for the ME SYSTEMS

After installation or subsequent modification, an ME SYSTEM shall not result in an unacceptable RISK.

Only HAZARDS arising from combining various equipment to constitute an ME SYSTEM shall be considered.

NOTE RESPONSIBLE ORGANIZATIONS are reminded that the assembly of ME SYSTEMS and modifications during the actual service life require evaluation to the requirements of this standard.

An ME SYSTEM shall provide:

– within the PATIENT ENVIRONMENT, the level of safety equivalent to ME EQUIPMENT complying with this standard; and

– outside the PATIENT ENVIRONMENT, the level of safety equivalent to equipment complying with their respective IEC or ISO safety standards.

Tests shall be performed:

– in NORMAL CONDITION unless otherwise specified, and

– under the operating conditions specified by the MANUFACTURER of the ME SYSTEM.

Safety tests that have already been performed on individual equipment of the ME SYSTEM according to relevant standards shall not be repeated.

The MANUFACTURER of an ME SYSTEM that is (re)configurable by the RESPONSIBLE ORGANIZATION or OPERATOR may use RISK MANAGEMENT methods to determine which configurations constitute the highest RISKS and which measures are needed to ensure that the ME SYSTEM in any possible configuration does not present an unacceptable RISK.

Non-ME EQUIPMENT, when used in an ME SYSTEM, shall comply with IEC or ISO safety standards that are relevant to that equipment.

Equipment in which protection against electric shock relies only on BASIC INSULATION shall not be used in an ME SYSTEM.

Compliance is checked by inspection of appropriate documents or certificates.

16.2 * ACCOMPANYING DOCUMENTS of an ME SYSTEM

An ME SYSTEM, (including a modified ME SYSTEM), shall be accompanied by documents containing all the data necessary for the ME SYSTEM to be used as intended by the MANUFACTURER, and an address to which the RESPONSIBLE ORGANIZATION can refer. The ACCOMPANYING DOCUMENTS shall be regarded as a part of the ME SYSTEM.

Copyright International Electrotechnical Commission
Provided by IHS Markit under license with IEC
No reproduction or networking permitted without license from IHS Not for Resale, 08/26/2020 19:12:41 MDT

NOTE ACCOMPANYING DOCUMENTS can be provided electronically, e.g. electronic file format or CD-ROM, for an ME SYSTEM capable of displaying or printing those documents.

These documents shall include:

a) the ACCOMPANYING DOCUMENTS for each item of ME EQUIPMENT that is provided by the MANUFACTURER (see 7.9);

b) the ACCOMPANYING DOCUMENTS for each item of non-ME EQUIPMENT that is provided by the MANUFACTURER;

c) the following information:
   - the specification of the ME SYSTEM, including the use as intended by the MANUFACTURER and a listing of all of the items forming the ME SYSTEM;
   - instructions for the installation, assembly and modification of the ME SYSTEM to ensure continued compliance with this standard;
   - instructions for cleaning and, when applicable, disinfecting and sterilizing each item of equipment or equipment part forming part of the ME SYSTEM (see 11.6.6 and 11.6.7);
   - additional safety measures that should be applied, during installation of the ME SYSTEM;
   - which parts of the ME SYSTEM are suitable for use within the PATIENT ENVIRONMENT;
   - additional measures that should be applied during preventive maintenance;
   - if a MULTIPLE SOCKET-OUTLET is present and it is a separate item, a warning that it shall not be placed on the floor;
   - a warning that an additional MULTIPLE SOCKET-OUTLET or extension cord shall not be connected to the ME SYSTEM;
   - a warning to connect only items that have been specified as part of the ME SYSTEM or that have been specified as being compatible with the ME SYSTEM;
   - the maximum permitted load for any MULTIPLE SOCKET-OUTLET(S) used with the ME SYSTEM;
   - an instruction that MULTIPLE SOCKET-OUTLETS provided with the ME SYSTEM shall only be used for supplying power to equipment that is intended to form part of the ME SYSTEM;
   - an explanation of the RISKS of connecting non-ME EQUIPMENT that has been supplied as a part of the ME SYSTEM directly to the wall outlet when the non-ME EQUIPMENT is intended to be supplied via a MULTIPLE SOCKET-OUTLET with a separating transformer;
   - an explanation of the RISKS of connecting any equipment that has not been supplied as a part of the ME SYSTEM to the MULTIPLE SOCKET-OUTLET;
   - the permissible environmental conditions of use of the ME SYSTEM including conditions for transport and storage; and
   - instructions to the OPERATOR not to touch parts referred to in 16.4 and the PATIENT simultaneously.

d) advice to the RESPONSIBLE ORGANIZATION:
   - to carry out all adjustment, cleaning, sterilization and disinfection PROCEDURES specified therein; and
   - that the assembly of ME SYSTEMS and modifications during the actual service life require evaluation to the requirements of this standard.

Compliance is checked by inspection.

--`,,```,,,,````-`-`,,`,,`,`,,`---
Copyright International Electrotechnical Commission
Provided by IHS Markit under license with IEC
No reproduction or networking permitted without license from IHS
Not for Resale, 08/26/2020 19:12:41 MDT

16.3 * Power supply

If ME EQUIPMENT is intended to receive its power from other equipment in an ME SYSTEM, the instructions for use shall specify the other equipment sufficiently to ensure compliance with the requirements of this standard (see 4.10.1, 5.5 f) and 7.9.2.3). See also Figure F.5.

If an ME SYSTEM:

– is intended to receive its power from an isolated power supply (IPS) or an uninterruptible power supply (UPS), and

– the ME SYSTEM can draw large transient currents when being switching on or off or when operating,

the MANUFACTURER shall restrict such transient currents to the allowed level according to the specification of the IPS or the UPS from which the ME SYSTEM is intended to be supplied.

If an IPS or UPS is not specified, the actual transient current level shall be disclosed in the technical description and any installation instructions.

Compliance is checked by inspection.

16.4 ENCLOSURES

Parts of non-ME EQUIPMENT in the PATIENT ENVIRONMENT that can be contacted by the OPERATOR during routine maintenance, calibration, etc. after removal of covers, connectors, etc., without the use of a TOOL shall operate at a voltage not exceeding the voltage specified in 8.4.2 c) supplied from a source that is separated from the SUPPLY MAINS by two MEANS OF OPERATOR PROTECTION (see 8.5.1).

Compliance is checked by inspection.

16.5 * SEPARATION DEVICES

When FUNCTIONAL CONNECTION between ME EQUIPMENT and other items of equipment of an ME SYSTEM or other systems can cause the allowable values of LEAKAGE CURRENT to be exceeded, then safety measures incorporating a SEPARATION DEVICE shall be applied.

The SEPARATION DEVICE shall have the dielectric strength, CREEPAGE DISTANCES and AIR CLEARANCES required for one MEANS OF OPERATOR PROTECTION appropriate for the highest voltage occurring across the SEPARATION DEVICE during a fault condition.

The WORKING VOLTAGE shall be the highest voltage across the SEPARATION DEVICE during a fault condition, but not less than the MAXIMUM MAINS VOLTAGE.

NOTE 1 For CLASS I equipment, potential differences can occur between the protective earth of the ME EQUIPMENT and the protective earth of other parts of the ME SYSTEM in the absence of a common protective earth.

NOTE 2 Situations that can require a SEPARATION DEVICE include FUNCTIONAL CONNECTIONS to an emergency calling system or a data processing system.

Compliance is checked by the tests in 8.8 and 8.9.

16.6 * LEAKAGE CURRENTS

16.6.1 TOUCH CURRENT

In NORMAL CONDITION, the TOUCH CURRENT from or between parts of the ME SYSTEM within the PATIENT ENVIRONMENT shall not exceed 100 μA.

In the event of the interruption of any non-PERMANENTLY INSTALLED PROTECTIVE EARTH CONDUCTOR, the TOUCH CURRENT from or between parts of an ME SYSTEM within the PATIENT ENVIRONMENT shall not exceed 500 μA.

NOTE For the purposes of this clause, the LEAKAGE CURRENT from accessible outer surfaces of equipment is also considered to be TOUCH CURRENT.

Copyright International Electrotechnical Commission
Provided by IHS Markit under license with IEC
No reproduction or networking permitted without license from IHS Not for Resale, 08/26/2020 19:12:41 MDT

16.6.2 EARTH LEAKAGE CURRENT of MULTIPLE SOCKET-OUTLET

If the ME SYSTEM or part of the ME SYSTEM is supplied from a MULTIPLE SOCKET-OUTLET, then the current in the PROTECTIVE EARTH CONDUCTOR of the MULTIPLE SOCKET-OUTLET shall not exceed 5 mA.

16.6.3 * PATIENT LEAKAGE CURRENT

The PATIENT LEAKAGE CURRENT and total PATIENT LEAKAGE CURRENT of an ME SYSTEM in NORMAL CONDITION shall not exceed the values specified for ME EQUIPMENT, as given in Table 3 and Table 4 (see also 8.7.3 and 16.1).

The total PATIENT LEAKAGE CURRENT may be measured at installation.

Compliance with the requirements of 16.6.1, 16.6.2 and 16.6.3 is checked by inspection and measurement using a measuring device as specified in 8.7.4.4.

16.6.4 Measurements

16.6.4.1 General conditions for ME SYSTEMS

a) *The TOUCH CURRENT, the PATIENT LEAKAGE CURRENT, the total PATIENT LEAKAGE CURRENT and the total EARTH LEAKAGE CURRENT are measured after the ME SYSTEM has been brought up to operating temperature as follows:*

The ME SYSTEM is operated:

– *For ME SYSTEMS intended for non-CONTINUOUS OPERATION;*

After operating in standby/quiescent mode until THERMAL STABILITY is reached, the ME SYSTEM is operated in NORMAL USE over consecutive cycles until THERMAL STABILITY is again achieved, or for seven hours, whichever is shorter. The "on" and "off" periods for each cycle are the RATED "on" and "off" periods;

– *For ME SYSTEMS intended for CONTINUOUS OPERATION;*

The ME SYSTEM is operated until THERMAL STABILITY is reached.

b) *The ME SYSTEM is connected to a supply with a voltage equal to the highest RATED MAINS VOLTAGE. When the characteristics of an ME SYSTEM can only be measured properly after it has been installed at the site of the RESPONSIBLE ORGANIZATION, prior to its clinical use, the ME SYSTEM is connected to the local SUPPLY MAINS.*

NOTE Where examination of the circuit arrangement and the arrangement of components and material of the ME SYSTEM shows no possibility of any HAZARD, the number of tests could be reduced.

16.6.4.2 Connection of the ME SYSTEM to the measuring supply circuit

a) The ME SYSTEM is tested after being assembled according to its ACCOMPANYING DOCUMENTS.

b) Measuring arrangement

If an isolating transformer is not used for LEAKAGE CURRENT measurements (e.g. when measuring LEAKAGE CURRENT for very high input power ME SYSTEMS), the reference earth of the measuring circuits is connected to the protective earth of the SUPPLY MAINS.

NOTE 1 It is recommended to position the measuring circuit as far as possible away from unscreened power supply leads and (unless specified otherwise in the following subclauses) to avoid placing the ME SYSTEM on or near a large earthed metal surface.

NOTE 2 However, APPLIED PARTS, including PATIENT cables (when present), should be placed on an insulating surface with a dielectric constant of approximately 1 (for example, expanded polystyrene) and approximately 200 mm above an earthed metal surface.

16.7 * Protection against MECHANICAL HAZARDS

If a MECHANICAL HAZARD exists, the ME SYSTEM shall comply with the applicable requirements of Clause 9.

--`,,```,,,,````-`-`,,`,,`,`,,`---

Copyright International Electrotechnical Commission
Provided by IHS Markit under license with IEC
No reproduction or networking permitted without license from IHS Not for Resale, 08/26/2020 19:12:41 MDT

Compliance is checked by inspection or applicable tests.

16.8 Interruption of the power supply to parts of an ME SYSTEM

An ME SYSTEM shall be so designed that an interruption and restoration of the power to the ME SYSTEM as a whole, or any part of the ME SYSTEM, shall not result in the loss of BASIC SAFETY or ESSENTIAL PERFORMANCE.

Compliance is checked by interruption and restoration of relevant power connections one at a time and all connections simultaneously.

16.9 ME SYSTEM connections and wiring

16.9.1 Connection terminals and connectors

Design and construction of electrical, hydraulic, pneumatic and gas connection terminals and connectors shall be such that incorrect connection of accessible connectors, removable without the use of a TOOL, shall be prevented unless it can be proven that no unacceptable RISK can result. In particular:

– Plugs for connection of PATIENT leads or PATIENT cables shall be so designed that they cannot be connected to other outlets of the same ME SYSTEM that are likely to be located in the PATIENT ENVIRONMENT unless it can be proved that no unacceptable RISK can result.

  Compliance is checked by inspection of PATIENT leads, PATIENT cables, connectors and outlets and, if interchange of the leads, cables, connectors or outlets is possible, by inspection of the RISK MANAGEMENT FILE.

– Medical gas connections on the ME SYSTEM for different gases to be operated in NORMAL USE shall not be interchangeable. See also ISO 407 [27].

  Compliance is checked by inspection of all medical gas connections.

16.9.2 MAINS PARTS, components and layout

16.9.2.1 * MULTIPLE SOCKET-OUTLET

a) A MULTIPLE SOCKET-OUTLET shall:
   – only allow connection by using a TOOL (see Figure I.1), or
   – be of a type that cannot accept MAINS PLUGS of any of the kinds specified in IEC/TR 60083, or
   – be supplied via a separating transformer (see 16.9.2.1 d) and Annex I).

   Compliance is checked by inspection.

b) A MULTIPLE SOCKET-OUTLET:
   – shall be marked with SAFETY SIGN ISO 7010-W001 (see Table D.2, SAFETY SIGN 2) such that it is visible in NORMAL USE; and:
     – shall be marked either individually or in combinations, with the maximum allowed continuous output in amperes or volt-amperes, or
     – shall be marked to indicate which equipment or equipment parts may be safely attached.
   – may be a separate item or an integral part of ME EQUIPMENT or non-ME EQUIPMENT.

   NOTE Each outlet does not have to be marked.

   Compliance is checked by inspection.

c) The MULTIPLE SOCKET-OUTLET shall comply with IEC 60884-1 and the following requirements.

Copyright International Electrotechnical Commission
Provided by IHS Markit under license with IEC
No reproduction or networking permitted without license from IHS Not for Resale, 08/26/2020 19:12:41 MDT

- CREEPAGE DISTANCES and AIR CLEARANCES shall comply with 8.9.
- It shall be of CLASS I construction and the PROTECTIVE EARTH CONDUCTOR shall be connected to the earthing contacts in the socket-outlets.
- PROTECTIVE EARTH TERMINALS and PROTECTIVE EARTH CONNECTIONS shall comply with 8.6.
- ENCLOSURES shall comply with 8.4.2 d).
- MAINS TERMINAL DEVICES and wiring shall comply with 8.11.4, if applicable.
- RATINGS of components shall not conflict with the conditions of use (see 4.8).
- Design and construction of electrical connection terminals and connectors of MULTIPLE SOCKET-OUTLETS shall prevent the incorrect connection of accessible connectors that are removable without the use of a TOOL.
- Requirements for the POWER SUPPLY CORD as described in 8.11.3 shall be fulfilled.

d) * If the MULTIPLE SOCKET-OUTLET is combined with a separating transformer, the following additional requirements apply.

- The separating transformer shall comply with this standard. Alternatively the separating transformer may comply with the requirements of IEC 61558-2-1, except that the requirements of maximum RATED output power of 1 kVA and degree of protection IPX4 do not apply.

  NOTE 1 As a separating transformer is not a MAINS SUPPLY TRANSFORMER, it does not require more than BASIC INSULATION.

  NOTE 2 Limitation of output power is not explained in IEC 61558-2-1 and the RATED output power is defined by the fuse in the installation and by the allowable power supply cable used. However, the characteristics of the separating transformer need to be carefully selected, taking into account the variations in the load current of the ME SYSTEM to ensure that the voltage supplied to the various items of the ME SYSTEM remains within the limits specified for the equipment.
- The separating transformer assembly shall be of CLASS I construction.
- The degree of protection against ingress of water as given in IEC 60529 shall be specified.
- The separating transformer assembly shall be marked according to the requirements of 7.2 and 7.3.
- The MULTIPLE SOCKET-OUTLET shall be permanently connected to the separating transformer or the socket-outlet of the separating transformer assembly shall be of a type that cannot accept MAINS PLUGS of any of the kinds identified in IEC/TR 60083 (see Figure I.1 and Figure I.2).

Compliance is checked by inspection and as described in the relevant subclauses of this standard.

16.9.2.2 * PROTECTIVE EARTH CONNECTIONS in ME SYSTEMS

For each part of an ME SYSTEM that shares a SUPPLY MAINS connection, the impedance and current carrying capability of the total protective earth path of an ME SYSTEM when tested as a unit shall comply with 8.6.4. Where the pathway of a fault current caused by a live part to a PROTECTIVE EARTHED part is protected only by the SUPPLY MAINS circuit over-current release (e.g. circuit breaker or fuse), the protective earth resistance of that pathway shall not exceed 200 mΩ.

Where the pathway of a fault current caused by a live part to a PROTECTIVE EARTHED part is protected by additional intermediate circuit breakers or fuses with current ratings 13 A or lower, then compliance with 8.6.4 b) and 8.7.2, first dash, is achieved and the protective earth resistance to that part of the fault pathway may exceed 200 mΩ but shall be less than 400 mΩ.

Copyright International Electrotechnical Commission
Provided by IHS Markit under license with IEC
No reproduction or networking permitted without license from IHS Not for Resale, 08/26/2020 19:12:41 MDT

PROTECTIVE EARTH CONNECTIONS shall be made so that the removal of any single item of equipment in the ME SYSTEM will not interrupt the protective earthing of any other part of the ME SYSTEM, without at the same time disconnecting the electrical supply to that part.

Additional PROTECTIVE EARTH CONDUCTORS shall only be detachable by use of a TOOL.

Compliance is checked by inspection.

16.9.2.3 Protection of conductors

Conductors that connect different items of equipment within an ME SYSTEM shall be protected against mechanical damage.

Compliance is checked by inspection.

17 * Electromagnetic compatibility of ME EQUIPMENT and ME SYSTEMS

The MANUFACTURER shall address the RISK(S) associated with ELECTROMAGNETIC DISTURBANCES.

Compliance is checked as specified in IEC 60601-1-2:2014 and IEC 60601-1-2:2014/AMD1:2020.

--`,,`,,`-`-`,,`,,`,`,,`---

Copyright International Electrotechnical Commission
Provided by IHS Markit under license with IEC
No reproduction or networking permitted without license from IHS Not for Resale, 08/26/2020 19:12:41 MDT

Annex A
(informative)

General guidance and rationale

A.1 General guidance

The requirements for ME EQUIPMENT and ME SYSTEMS differ from those for other kinds of electrical equipment because of the particular relationship of ME EQUIPMENT or ME SYSTEM to the PATIENT, the OPERATOR and the surroundings. The following aspects play an important role in this relationship:

a) the inability of the PATIENT or OPERATOR to detect the presence of certain HAZARDS, such as ionizing and non-ionizing radiation;

b) absence of normal reactions of the PATIENT who can be ill, unconscious, anaesthetized, immobilized, etc.;

c) absence of normal protection to currents provided by the PATIENT'S skin, if this is penetrated or treated to obtain a low skin-resistance;

d) support or replacement of vital body functions, which depends on the reliability of ME EQUIPMENT or ME SYSTEM;

e) the simultaneous connection to the PATIENT of more than one piece of ME EQUIPMENT;

f) combination of high-power ME EQUIPMENT and sensitive low-signal ME EQUIPMENT often in ad hoc combinations;

g) the application of electrical circuits directly to the human body, either through contacts to the skin or through the insertion of probes into internal organs;

h) conditions, particularly in operating theatres, that can present a combination of humidity, moisture or HAZARDS of fire or explosion caused by air, oxygen or nitrous oxide.

When ME EQUIPMENT is combined with another electrical equipment to form an ME SYSTEM, additional requirements apply. These are given in Clause 16. In some instances, reference to other parts of this standard is made. If a clause or subclause is specifically intended to be applicable to ME EQUIPMENT only, the title and content of that clause or subclause will say so. If that is not the case, the clause or subclause could be applicable to ME SYSTEMS as well as to ME EQUIPMENT.

A.2 Safety of ME EQUIPMENT and ME SYSTEMS

BASIC SAFETY and ESSENTIAL PERFORMANCE of ME EQUIPMENT and ME SYSTEMS, as described in IEC/TR 60513 [12], are part of the total safety situation, comprising safety of ME EQUIPMENT, safety of the installation to which the ME EQUIPMENT or ME SYSTEM is connected and safety of application.

BASIC SAFETY and ESSENTIAL PERFORMANCE of ME EQUIPMENT and ME SYSTEMS are required for NORMAL USE and for reasonably foreseeable misuse and in NORMAL CONDITION and SINGLE FAULT CONDITIONS. Reliability of functioning is regarded as a safety aspect for life-supporting ME EQUIPMENT and where interruption of an examination or treatment is considered as a HAZARDOUS SITUATION for the PATIENT.

Adequate construction, lay-out and ACCOMPANYING DOCUMENTS that serve to prevent use errors are regarded as safety aspects.

Safety precautions are considered acceptable if they provide adequate protection without an undesirable restriction of normal function.

--`,,```,,,,````-`-`,,`,,`,`,,`---
Copyright International Electrotechnical Commission
Provided by IHS Markit under license with IEC
No reproduction or networking permitted without license from IHS Not for Resale, 08/26/2020 19:12:41 MDT

Generally, it is presumed that ME EQUIPMENT and ME SYSTEMS are operated under the jurisdiction of qualified or licensed persons and that the OPERATOR has the skill required for a particular medical application and acts according to the instructions for use.

The total safety of ME EQUIPMENT can consist of:

– inherent safety by design;
– protective measures incorporated into the ME EQUIPMENT or additional protective measures, such as the use of shields or protective clothing; and
– information for safety, such as restrictions in the instructions for use concerning transport, mounting or positioning, connection, putting into service, operation and the position of the OPERATOR and his/her assistants in relation to the ME EQUIPMENT during use.

A.3 Guidance to the third edition

In this edition, a number of clauses and subclauses from the second edition have been deleted, e.g. when the clause or subclause was indicated as “Not used.” However, those clauses or subclauses from the second edition that stated “No general requirement” have been retained so that particular or collateral standards can refer to them. The statement, “No general requirement”, has been replaced with a reference to the RISK MANAGEMENT PROCESS because the “general requirement” is that, in the absence of a particular or collateral standard, these issues are dealt with through the application of RISK MANAGEMENT.

While preparing the third edition, basic safety standards and ISO/IEC guides have been taken into consideration to the extent possible consistent with the particular relationship of ME EQUIPMENT or ME SYSTEM to the PATIENT, the OPERATOR and the surroundings.

The format of the third edition has been aligned with the basic requirements of Part 2 of the ISO/IEC Directives. All the sections except Section 1 of the second edition have been converted into major clauses. This change was implemented because sections are no longer allowed under the drafting rules and the new numbering system will allow future changes to modify a clause without affecting the number of other parts of the standard.

The normative references have been moved from Appendix L of the second edition to Clause 2. Informative references are listed in the Bibliography.

The definitions in Clause 3 have been rearranged into a single alphabetical listing as organizing the definitions by category was becoming increasingly difficult and the result less intuitive. The index has been expanded to identify each page where a term is used in the body of the standard. A number of new defined terms have been introduced in support of new or expanded requirements.

A general requirement for a RISK MANAGEMENT PROCESS has been introduced in 4.2.

Clause 8 has been extensively restructured to bring together in one clause the requirements relating to electrical safety. The requirements in Clause 8 have been reviewed against the safety requirements for information technology (IT) equipment in IEC 60950-1 and harmonized where appropriate given the particular relationship of ME EQUIPMENT to the PATIENT, the OPERATOR and the surroundings.

Clause 9 on protection against MECHANICAL HAZARDS has been substantially revised to deal with a wide range of the HAZARDS that ME EQUIPMENT could pose to the OPERATOR or PATIENT. Requirements relating to the mechanical strength of the ME EQUIPMENT when subjected to the stresses caused by pushing, impact, dropping, and rough handling are in 15.3.

The standard now deals with USABILITY in 12.2 as opposed to “user or human errors.”

Section six of the second edition on protection against the HAZARDS of ignition of flammable anaesthetic mixtures has been moved to a normative annex. While this annex was originally intended to be informative because the use of such anaesthetics is rare, comments from

--`,,```,,,,````-`-`,,`,,`,`,,`---
Copyright International Electrotechnical Commission
Provided by IHS Markit under license with IEC
No reproduction or networking permitted without license from IHS
Not for Resale, 08/26/2020 19:12:41 MDT

National Committees indicated that some MANUFACTURERS might still want to offer ME EQUIPMENT for such applications.

The surface temperature limit in 11.1.2.2 for APPLIED PARTS that are in contact with the PATIENT for 10 min or more has been increased from 41 °C to 43 °C. However, the MANUFACTURER is to disclose in the ACCOMPANYING DOCUMENTS if the surface temperature of an APPLIED PART exceeds 41 °C.

The requirements of IEC 60601-1-4 [14] for PROGRAMMABLE ELECTRICAL MEDICAL SYSTEMS, as referred to in 52.1 of the second edition, have been incorporated into the body of this standard in a new Clause 14.

The requirements of IEC 60601-1-1 [13] for ME SYSTEMS have been incorporated into the body of this standard in a new Clause 16.

A.4 Rationale for particular clauses and subclauses

The following are rationales for specific clauses and subclause in this standard, with clause and subclause numbers parallel to those in the body of the document.

Subclause 1.1 – Scope

The scope of this standard is established by the reference to the definitions of ME EQUIPMENT and ME SYSTEMS. This is to clearly define the scope of this standard as compared with requirements for other types of electrical equipment.

Laboratory equipment within the scope of IEC 61010-1 [22] is not covered by this standard except when a MANUFACTURER incorporates such laboratory equipment into an ME SYSTEM.

This standard does not apply to active implantable medical devices covered by the ISO 14708-1 [31] except where the ISO 14708-1 requires compliance with IEC 60601-1.

This standard does not apply to any other electrical equipment unless it falls under the definition of ME EQUIPMENT or ME SYSTEMS.

Subclause 1.3 – Collateral standards

Collateral standards are a vehicle developed by Technical Committee 62 as a way of extending the general standard. Collateral standards fall into two categories:

– standards that address additional BASIC SAFETY and ESSENTIAL PERFORMANCE requirements that are common to a subgroup of ME EQUIPMENT. For example, Subcommittee 62B developed IEC 60601-1-3 to provide general requirements for protection against ionizing radiation in medical diagnostic X-ray equipment in order that the dose equivalent to the PATIENT, the OPERATOR and other staff can be kept as low as reasonably achievable; or

– standards that address additional BASIC SAFETY or ESSENTIAL PERFORMANCE requirements that deal with characteristic of ME EQUIPMENT or ME SYSTEMS that are not fully covered by the general standard.

The requirements from two of the collateral standards developed for the second edition of IEC 60601-1 have been incorporated into the body of this standard. They are:

– IEC 60601-1-1:2000, *Medical electrical equipment – General requirements for safety – Collateral standard: Safety requirements for medical electrical systems*

– IEC 60601-1-4:1996, *Medical electrical equipment – Part 1: General requirements for safety – 4. Collateral standard: Programmable electrical medical systems* and its Amendment 1 (1999)[9].

[9] There exists a consolidated edition 1.1 (2000) including IEC 60601-1-4 (1996) and its Amendment 1 (1999).

Copyright International Electrotechnical Commission
Provided by IHS Markit under license with IEC
No reproduction or networking permitted without license from IHS Not for Resale, 08/26/2020 19:12:41 MDT

While both standards will remain active until all the particular standards based on the second edition of IEC 60601-1 have been aligned with this standard, they are not applicable when applying this standard.

Additional collateral standards can be published from time to time as needs are identified. While those standards will not be mentioned in this standard, they still establish general requirements that need to be considered when applicable. Readers are encouraged to consult the registers of currently valid International Standards maintained by their national standards body to see what applicable collateral standards have been published.

Subclause 1.4 – Particular standards

A particular standard can specify:

– clauses or subclauses of this standard that apply without amendment;

– clauses or subclauses (or parts of them) of this standard that do not apply;

– clauses or subclauses (or parts of them) of this standard that are replaced by clauses or subclauses in the particular standard; or

– additional clauses or subclauses.

A particular standard can contain:

a) requirements that result in an increase of BASIC SAFETY or ESSENTIAL PERFORMANCE;

b) requirements that can be less stringent than the requirements in this standard, if the latter cannot be maintained because of, for example, the power output of ME EQUIPMENT;

c) requirements concerning performance, reliability, interfaces, etc.;

d) accuracy of working data; or

e) extension and limitation of environmental conditions.

Clause 2 – Normative references

This clause provides a list of the documents cited in other normative parts of this standard in such a way as to make them indispensable for the application of the document. However, conformance with the documents in this list is required only to the extent that they are referenced in a normative requirement in this standard. For example, if a reference is made to a specific clause, subclause, table or figure, then the user of this standard is only required to conform to the requirements in that clause, subclause, table or figure in order to satisfy the requirement in this standard.

Undated references are made only to a complete document or to a major part thereof and only if it is accepted that it will be possible to use all future changes of the referenced document for the purposes of this standard. For example, an undated reference is made to IEC 60529 because it is intended that the MANUFACTURER will always use the latest edition of that standard when assigning IP Codes to ENCLOSURES.

Undated references are understood to include all amendments to and revisions of the referenced document.

Dated references are made when the requirements of a particular edition are to be used to satisfy a requirement of this standard. Subsequent amendments to, or revisions of, dated references will need to be incorporated by amendment of this standard.

References to specific clauses, subclauses, tables and figures of another document are always dated.

Clause 3 – Terminology and definitions

This clause contains definitions for terms that are necessary for the understanding of the requirements in this standard. Many of these terms are inherited from the second edition. However, a number of terms have been added during the course of developing new or modified requirements. Where possible, existing definitions in other standards have been copied or adapted.

Copyright International Electrotechnical Commission
Provided by IHS Markit under license with IEC
No reproduction or networking permitted without license from IHS Not for Resale, 08/26/2020 19:12:41 MDT

Except when used to support other defined terms, a definition is only provided if the term is used more than once in the text of the standard.

Defined terms are printed in SMALL CAPITALS to assist the reader in identifying them in the body of the standard. When normal case is used, the words have their normal English meaning. The committee made an effort to avoid using the same word both as a defined term and in its normal English meaning. At times this has not been possible. For example, the word "procedure" is used as a defined term in Start-up PROCEDURE, specifically meaning a "specific way to perform an activity" of starting up the ME EQUIPMENT or ME SYSTEM. It is also used in the definition of PATIENT according to its general English meaning, i.e. "Living being (person or animal) undergoing a medical, surgical or dental procedure."

Subclause 3.8 – APPLIED PART

Parts that contact PATIENTS can present greater HAZARDS than other parts of the ENCLOSURE, and these APPLIED PARTS are therefore subject to more stringent requirements, for example, for temperature limits and (according to classification B/BF/CF) for LEAKAGE CURRENT.

NOTE Some other ACCESSIBLE PARTS of the ENCLOSURES of ME EQUIPMENT are subject to tests that are more demanding than those for ENCLOSURES of other kinds of equipment, because the PATIENT can touch them, or the OPERATOR can touch them and the PATIENT simultaneously.

In order to determine which requirements apply, it is necessary to distinguish between APPLIED PARTS and parts that are simply considered as the ENCLOSURE.

Thus, typically:

– an infrared therapy lamp does not have an APPLIED PART because it does not need to be brought into direct contact with the PATIENT;

– the only part of an X-ray table that is an APPLIED PART is the top on which the PATIENT lies;

– likewise, in an MRI scanner, the only APPLIED PART is the table supporting the PATIENT.

However, a part that unintentionally comes into contact with an unconscious, anaesthetized or incapacitated PATIENT can present the same RISKS as an APPLIED PART that necessarily has to contact the PATIENT. On the other hand, a part that an active PATIENT can reach out and touch might present no more RISK to that PATIENT than it presents to an OPERATOR.

The definition in the first and second editions of this standard failed to address this problem. The second amendment to the second edition extended the definition to include parts that can be brought into contact with the PATIENT, but the new definition continued to cause difficulties.

In this edition, subclause 4.6 requires the RISK MANAGEMENT PROCESS to identify which parts, other than APPLIED PARTS, are subject to the same requirements as APPLIED PARTS. These can include parts of non-ME EQUIPMENT in an ME SYSTEM.

Particular standards should specifically identify the APPLIED PART(S) in particular types of ME EQUIPMENT.

In order to assess which parts are APPLIED PARTS and what are the PATIENT CONNECTIONS, the following PROCESS is employed in the order shown.

a) Determine whether the ME EQUIPMENT has an APPLIED PART, and if it has, identify the extent of the APPLIED PART (these decisions being based on non-electrical considerations).

b) If there is no APPLIED PART, there are no PATIENT CONNECTION(S).

c) If there is an APPLIED PART, there can be one or more PATIENT CONNECTION(S). Even if the APPLIED PART has no accessible conductive parts, foil applied in accordance with 8.7.4.7 is regarded as one PATIENT CONNECTION.

Copyright International Electrotechnical Commission
Provided by IHS Markit under license with IEC
No reproduction or networking permitted without license from IHS Not for Resale, 08/26/2020 19:12:41 MDT

d) Where a conductive part of the APPLIED PART is not in direct contact with the PATIENT, but is not separated and current can flow through such a part to or from the PATIENT, it is to be treated as an individual PATIENT CONNECTION.

NOTE Relevant separation requirements are those that relate to MEANS OF PATIENT PROTECTION.

An APPLIED PART can include one or more functions. Each function can include one or more PATIENT CONNECTIONS. A PATIENT CONNECTION can be an electrode that is intended to carry current; or the electrical connection can be incidental to the purpose, for example with an intra-vascular fluid line or a PATIENT support.

See also the rationale for 3.78.

Figure A.1 to Figure A.7 (inclusive) provide examples of the way in which APPLIED PARTS and PATIENT CONNECTIONS are identified in order to apply the requirements for PATIENT LEAKAGE CURRENT and PATIENT AUXILIARY CURRENT in various ME EQUIPMENT and ME SYSTEMS.

Figure A.1 and Figure A.2 shows an ECG monitor that includes the ECG monitor, the PATIENT cable, PATIENT leads and the ECG electrodes. In Figure A.1 and Figure A.2:

– The APPLIED PART includes the electrodes and those parts of the PATIENT leads or PATIENT cable that need to physically contact the PATIENT in NORMAL USE.

– Application of RISK MANAGEMENT might identify other parts of the PATIENT lead or PATIENT cable that have to be treated as APPLIED PARTS because of the probability they will come in contact with the PATIENT.

– The PATIENT CONNECTIONS consist of the ECG electrodes, which are all part of the same function of the APPLIED PART.

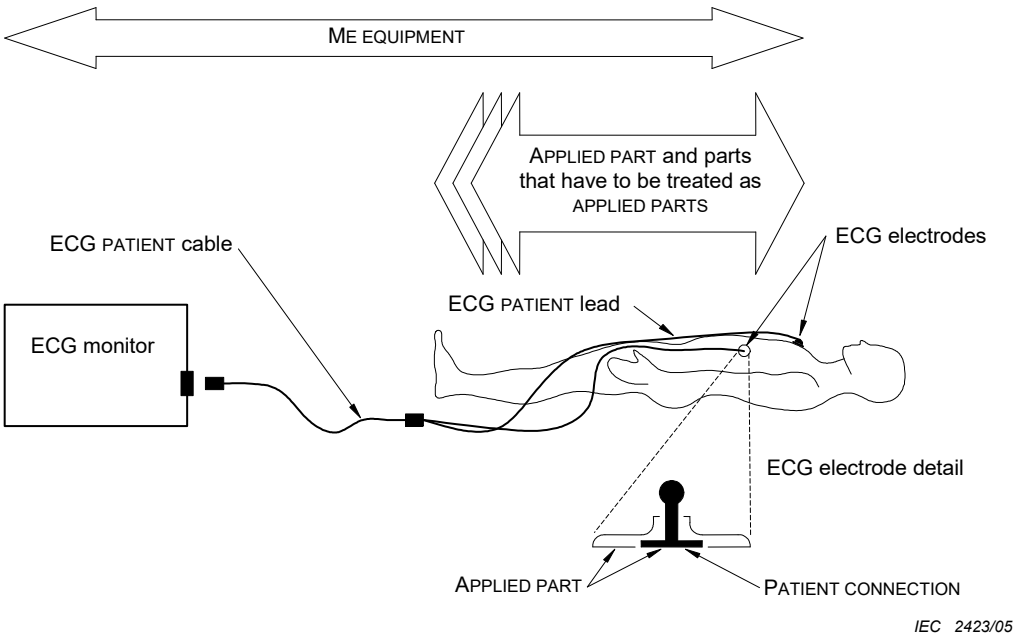

Figure A.1 – Identification of ME EQUIPMENT, APPLIED PARTS and PATIENT CONNECTIONS in an ECG monitor

Figure A.2 shows the required F-TYPE APPLIED PART insulation. The parts within the dotted line are the PATIENT circuit.

In Figure A.2, the required APPLIED PART insulation is:

– one MEANS OF PATIENT PROTECTION between earth and parts within the dotted line based on the MAINS VOLTAGE;

– two MEANS OF PATIENT PROTECTION between earth and parts within the dotted line based on the voltage carried by these parts; and

Copyright International Electrotechnical Commission
Provided by IHS Markit under license with IEC
No reproduction or networking permitted without license from IHS Not for Resale, 08/26/2020 19:12:41 MDT

– two MEANS OF PATIENT PROTECTION between live parts (including mains) and the parts within the dotted line.

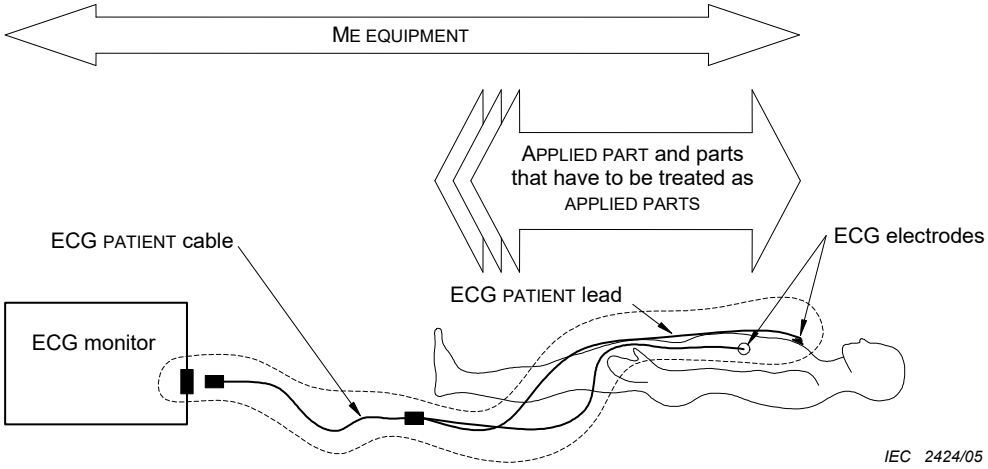

Figure A.2 – Example of the insulation of an F-TYPE APPLIED PART with the insulation incorporated in the ME EQUIPMENT

Figure A.3 shows an F-TYPE APPLIED PART with the insulation incorporated in a transducer. The parts within the dotted line are the PATIENT circuit. There are parts outside the dotted line that are subject to the requirements for APPLIED PARTS as determined through the RISK MANAGEMENT PROCESS.

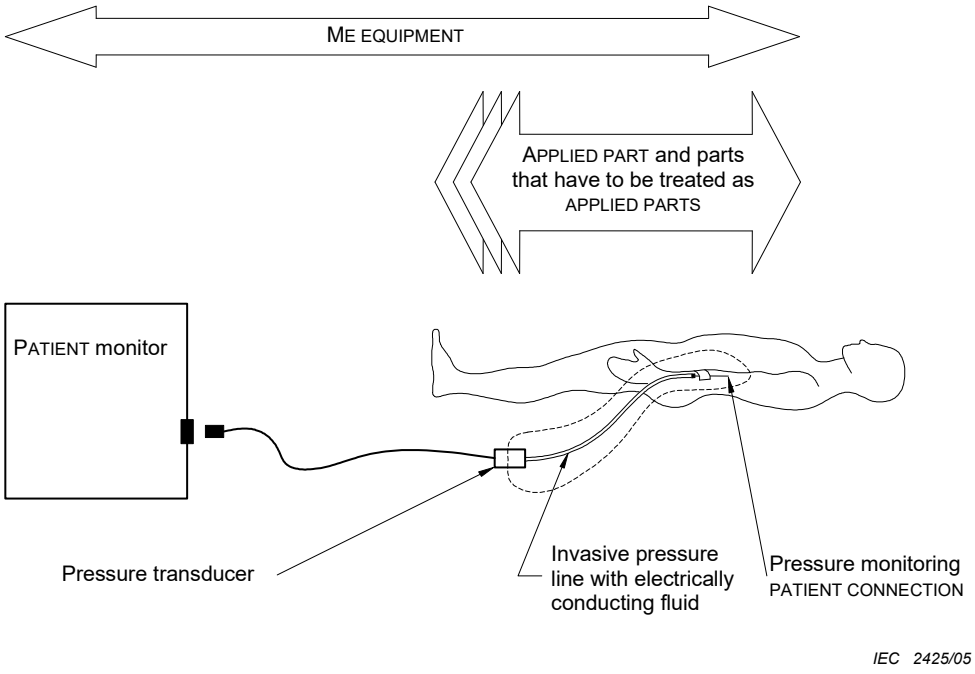

Figure A.3 – Identification of ME EQUIPMENT, APPLIED PARTS and PATIENT CONNECTIONS in a PATIENT monitor with invasive pressure monitoring facility

Figure A.4 shows a PATIENT monitor with ECG and invasive pressure monitoring facilities. In this example:

– The ME EQUIPMENT includes the ECG monitor; the ECG PATIENT cable, the PATIENT leads and their electrodes; and the pressure transducer and its fluid filled line.

Copyright International Electrotechnical Commission
Provided by IHS Markit under license with IEC
No reproduction or networking permitted without license from IHS
Not for Resale, 08/26/2020 19:12:41 MDT

– The APPLIED PART(s) include the ECG electrodes and those parts of the PATIENT cable and PATIENT leads that need to physically contact the PATIENT in NORMAL USE; and the fluid filled pressure monitoring line.

– Application of RISK MANAGEMENT might identify other parts of the ECG PATIENT cable, the PATIENT leads or the pressure transducer that have to be treated as APPLIED PARTS because of the probability they will come in contact with the PATIENT.

– The ECG PATIENT CONNECTIONS consist of the ECG electrodes.

– The pressure monitoring PATIENT CONNECTION consists of the electrically conducting fluid in the pressure line. For the measurement of PATIENT LEAKAGE CURRENT and PATIENT AUXILIARY CURRENT, an electrode is placed in the electrically conducting fluid and treated as a single PATIENT CONNECTION.

– If the PATIENT CONNECTIONS associated with the ECG function are not electrically separated from the PATIENT CONNECTION associated with the pressure monitoring function, these are treated as two functions of the same APPLIED PART.

– If the PATIENT CONNECTIONS associated with the ECG function are electrically separated from the PATIENT CONNECTION associated with the pressure monitoring function, these are treated as separate APPLIED PARTs.

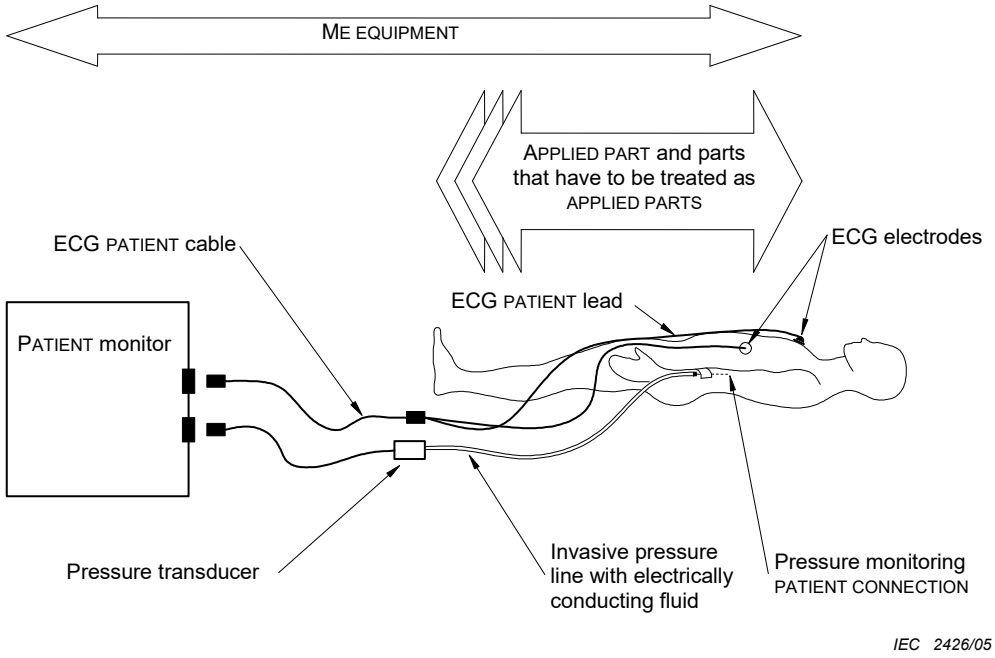

Figure A.4 – Identification of ME EQUIPMENT, APPLIED PARTS and PATIENT CONNECTIONS in a multifunction PATIENT monitor with invasive pressure monitoring facilities

Figure A.5 shows an X-ray ME SYSTEM in which:

– The ME SYSTEM includes the X-ray source assembly, the X-ray table and the wall stand, which are all items of ME EQUIPMENT. Other parts of the ME SYSTEM such as the X-ray generator and OPERATOR console are not shown.

– The APPLIED PART(s) include the top of the table and the front of the wall stand, as these parts need to physically contact the PATIENT in NORMAL USE.

– The application of RISK MANAGEMENT might identify some parts of the tube assembly and some other parts of the table and the wall stand as having to be treated as APPLIED PARTS because of the probability they will come in contact with the PATIENT.

– The PATIENT CONNECTIONS consist of the conductive parts of these APPLIED PARTS that electrically contact the PATIENT.

– The MANUFACTURER can specify that the table and the wall stand are different functions of the same APPLIED PART.

Copyright International Electrotechnical Commission
Provided by IHS Markit under license with IEC
No reproduction or networking permitted without license from IHS
Not for Resale, 08/26/2020 19:12:41 MDT

– Alternatively, the MANUFACTURER can specify that the table and the wall stand are different APPLIED PARTS.

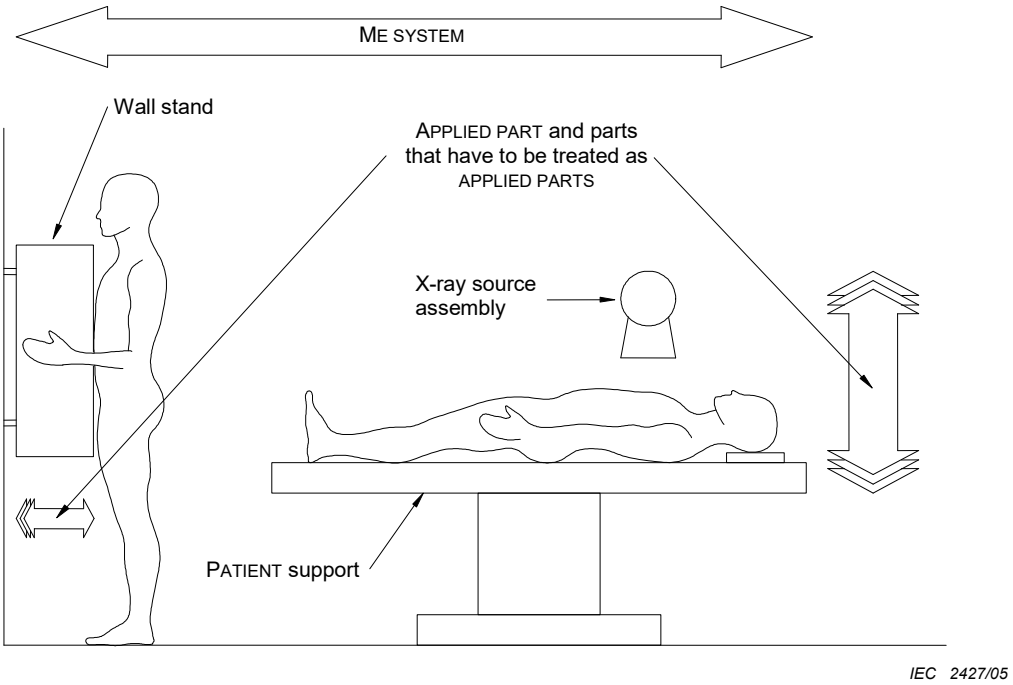

Figure A.5 – Identification of APPLIED PARTS and PATIENT CONNECTIONS in an X-ray ME SYSTEM

Figure A.6 shows a transcutaneous electronic nerve stimulator (TENS) that is intended to be worn on the PATIENT's belt and connected to electrodes applied to the PATIENT's upper arm. In this case:

– The ME EQUIPMENT includes the TENS stimulator, the electrode cable and the electrodes.

– The APPLIED PART includes the electrodes and those parts of the electrode leads that physically need to contact the PATIENT in NORMAL USE.

– The application of RISK MANAGEMENT might identify that the case of the stimulator and its belt clip also have to be treated as APPLIED PARTS because of the probability they will come in contact with the PATIENT.

– The PATIENT CONNECTIONS consist of the electrodes, which are all part of the same function of this APPLIED PART.

Copyright International Electrotechnical Commission
Provided by IHS Markit under license with IEC
No reproduction or networking permitted without license from IHS
Not for Resale, 08/26/2020 19:12:41 MDT

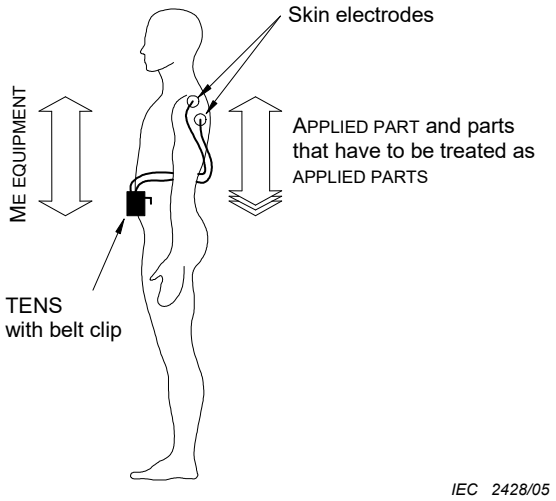

Figure A.6 – Identification of ME EQUIPMENT, APPLIED PARTS and PATIENT CONNECTIONS in a transcutaneous electronic nerve stimulator (TENS) intended to be worn on the PATIENT'S belt and connected to electrodes applied to the PATIENT'S upper arm

Figure A.7 shows an ECG processing ME EQUIPMENT / ME SYSTEM in which:

– The ME SYSTEM includes the ECG module, PATIENT cable, PATIENT leads and electrodes, and the personal computer and any of its ACCESSORIES (not shown).

– The MANUFACTURER can choose to specify one of the following situations:

  - The ECG module and its PATIENT cable, PATIENT leads and electrodes are an item of ME EQUIPMENT; and the personal computer is not an item of ME EQUIPMENT. This would be an ME SYSTEM.
  - The ECG module and its PATIENT cable, PATIENT leads and electrodes are one item of ME EQUIPMENT; and the personal computer is a separate item of ME EQUIPMENT. This would also be an ME SYSTEM.
  - The ECG module and its PATIENT cable, PATIENT leads and electrodes together with the personal computer is a single item of ME EQUIPMENT and not an ME SYSTEM.

– The APPLIED PART includes the electrodes and those parts of the PATIENT cable or, PATIENT leads that need to physically contact the PATIENT in NORMAL USE.

– Application of RISK MANAGEMENT might identify other parts of the PATIENT cable or, PATIENT leads have to be treated as APPLIED PARTS because of the probability they will come in contact with the PATIENT.

– The PATIENT CONNECTIONS consist of the ECG electrodes, which are all part of the same function of the APPLIED PART.

--`,,`,,`-`-`,,`,,`,`,,`---

Copyright International Electrotechnical Commission
Provided by IHS Markit under license with IEC
No reproduction or networking permitted without license from IHS Not for Resale, 08/26/2020 19:12:41 MDT

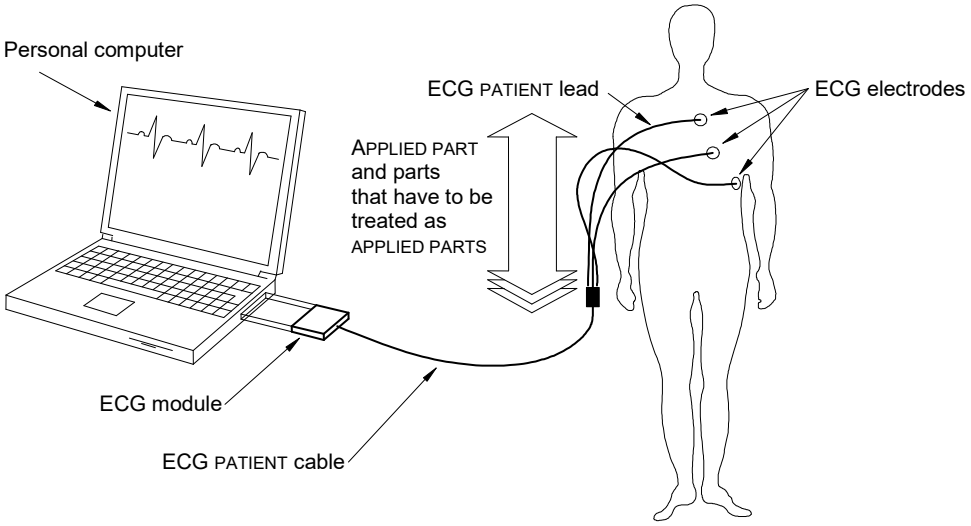

Figure A.7 – Identification of ME EQUIPMENT or ME SYSTEM, APPLIED PARTS and PATIENT CONNECTIONS in a personal computer with an ECG module

Subclause 4.6 would likely not apply to ACCESSIBLE PARTS of ME EQUIPMENT which are positioned according their INTENDED USE in such a way that the PATIENT could touch them only by a deliberate movement. This is based on the assumption that a PATIENT could react to a negative stimulus. Further, such PATIENTS are likely to have contact with non-ME EQUIPMENT such as bedside lights, personal computers, radios, etc.

Subclause 3.9 – BASIC INSULATION

This definition does not include insulation used exclusively for functional purposes.

Subclause 3.10 – BASIC SAFETY

BASIC SAFETY relates to a device not resulting in HARM incidental to its operation.

BASIC SAFETY is often a passive form of protection (such as radiation shielding or electrical grounding).

ESSENTIAL PERFORMANCE generally relates to ME EQUIPMENT or ME SYSTERMS operating as intended without creating a HAZARD. A failure of ESSENTIAL PERFORMANCE can be either a lack of performance (such as life supporting performance) or incorrect performance (such as delivering an incorrect dose to the PATIENT).

In general, BASIC SAFETY relates to product properties that are not device specific and ESSENTIAL PERFORMANCE relates to a class of products (such as a defibrillators being able to deliver the correct electrical shock).

While the terms BASIC SAFETY and ESSENTIAL PERFORMANCE are generally considered to be mutually exclusive, there are some HAZARDS that may relate to both BASIC SAFETY and ESSENTIAL PERFORMANCE concurrently.

Subclause 3.15 – CLEARLY LEGIBLE

Vision or visual acuity can be tested by reading a Snellen eye chart at a distance of 6 m. Near vision can be tested using a Jaeger test card. By examining a large number of people, doctors have decided what a “normal” human being should be able to see at various distances. That is the description of normal vision.

Copyright International Electrotechnical Commission
Provided by IHS Markit under license with IEC
No reproduction or networking permitted without license from IHS Not for Resale, 08/26/2020 19:12:41 MDT

Subclause 3.17 – COMPONENT WITH HIGH-INTEGRITY CHARACTERISITCS

The concept of high-integrity refers only to specific characteristics of the component. These characteristics are relied upon to ensure safety of the product. Such a COMPONENT WITH HIGH-INTEGRITY CHARACTERISTICS should be identified in the ACCOMPANYING DOCUMENTS by the MANUFACTURER (e.g. for maintenance). See also the rationale for 4.9.

Subclause 3.18 – CONTINUOUS OPERATION

While the terms CONTINUOUS OPERATION or non-CONTINUOUS OPERATION are used with regard to the ME EQUIPMENT, parts of the ME EQUIPMENT can be RATED differently. For example, an electrosurgical generator might be RATED for CONTINUOUS OPERATION while the APPLIED PART is RATED for non-CONTINUOUS OPERATION.

Subclause 3.20 – DEFIBRILLATION-PROOF APPLIED PART

A DEFIBRILLATION-PROOF APPLIED PART is protected only against discharges of defibrillators complying with IEC 60601-2-4 [15]. Higher voltage defibrillators could damage DEFIBRILLATION-PROOF APPLIED PARTS.

Subclause 3.21 – DETACHABLE POWER SUPPLY CORD

Cord sets are covered by IEC 60320-1.

Subclause 3.22 – DIRECT CARDIAC APPLICATION

A distinction is made between use of APPLIED PARTS that might come in direct contact with the PATIENT'S heart and all other circumstances of contact with the PATIENT. Ventricular fibrillation can be caused by a much smaller current flowing through a small contact area where a wire or catheter makes direct contact with the heart than a current flowing through any other point of contact on or in the PATIENT'S body.

Subclause 3.23 – DOUBLE INSULATION

BASIC INSULATION and SUPPLEMENTARY INSULATION can, if required, be tested separately. Where multiple layers of insulation cannot be tested separately, the insulation system is considered as REINFORCED INSULATION.

Subclause 3.24 – DUTY CYCLE

The terms "on time" and "off time" are considered to include "bursts" of operation and deactivation as well as CONTINUOUS OPERATION.

Subclause 3.26 – ENCLOSURE

The ENCLOSURE of ME EQUIPMENT or ME EQUIPMENT parts includes all ACCESSIBLE PARTS, knobs, grips, cables, connectors and the like. This includes any ACCESSIBLE PARTS of external connections between other separate parts.

Subclause 3.27 – ESSENTIAL PERFORAMNCE

It has long been recognized that ME EQUIPMENT or an ME SYSTEM that does not perform properly could result in unacceptable RISK for PATIENTS, OPERATORS, or others. Hence the concept of "safety" has been broadened from the BASIC SAFETY considerations in the first and second editions of this standard to include ESSENTIAL PERFORMANCE matters.

In order to achieve its INTENDED USE, the ME EQUIPMENT or ME SYSTEM needs to perform within certain limits. These limits are usually specified by the MANUFACTURER but could be specified by this standard, a collateral standard or a particular standard in the IEC 60601 family.

Examples of ESSENTIAL PERFORMANCE are:

– correct administration of a drug by a syringe pump where inaccuracy/incorrect administration would cause an unacceptable RISK to the PATIENT;

Copyright International Electrotechnical Commission
Provided by IHS Markit under license with IEC
No reproduction or networking permitted without license from IHS Not for Resale, 08/26/2020 19:12:41 MDT

– the ability of an electrocardiograph/monitor to recover from the effects of the discharge of a defibrillator where the failure to recover could lead to an incorrect response by the medical staff that would present an unacceptable RISK to the PATIENT;

– correct operation of an ALARM SYSTEM in an intensive care or operating room monitoring system where an incorrect/missing ALARM SIGNAL could lead to an incorrect response by the medical staff that would present an unacceptable RISK to the PATIENT; or

– correct output of diagnostic information from ME EQUIPMENT that is likely to be relied upon to determine treatment, where incorrect information could lead to an inappropriate treatment that would present an unacceptable RISK to the PATIENT.

For purposes of this standard, performance related to BASIC SAFETY aspects of the ME EQUIPMENT, such as the performance of BASIC INSULATION, is not considered to be ESSENTIAL PERFORMANCE.

Particular and collateral standards in the IEC 60601 family are expected to identify specific ESSENTIAL PERFORMANCE.

Subclause 3.33 – FUNCTIONAL CONNECTION

The defined term FUNCTIONAL CONNECTION is used to facilitate the definition of an ME SYSTEM. The FUNCTIONAL CONNECTION is a coupling between items of an ME SYSTEM, including the possibility of supplying power.

The phrase “or otherwise” could include mechanical, optical or wireless connections for example.

Subclause 3.35 – FUNCTIONAL EARTH TERMINAL

In ME EQUIPMENT, functional earth connections can be made by means of a FUNCTIONAL EARTH TERMINAL that is accessible to the OPERATOR. Alternatively this standard also allows a functional earth connection for CLASS II ME EQUIPMENT via a green and yellow conductor in a POWER SUPPLY CORD. In this case the parts to which this conductor is connected cannot be ACCESSIBLE PARTS (see 8.6.9), and have to be insulated from ACCESSIBLE PARTS.

Subclause 3.38 – HARM

The definition of HARM is based on the definition in ISO 14971 modified to include animals. This change was made since the scope of the IEC 60601-1 includes the safety of animals.

Copyright International Electrotechnical Commission
Provided by IHS Markit under license with IEC
No reproduction or networking permitted without license from IHS Not for Resale, 08/26/2020 19:12:41 MDT

Subclause 3.40 – HAZARDOUS SITUATION

As used in this standard, a HAZARD cannot result in HARM until such time as a sequence of events or other circumstances (including NORMAL USE) lead to a HAZARDOUS SITUATION. As a result of the RISK MANAGEMENT PROCESS, the related RISK acceptability can be assessed by estimating both SEVERITY and probability of occurrence of the HARM that could result from this HAZARDOUS SITUATION (see Figure A.8 adapted from Figure C.1 of ISO 14971:2019).

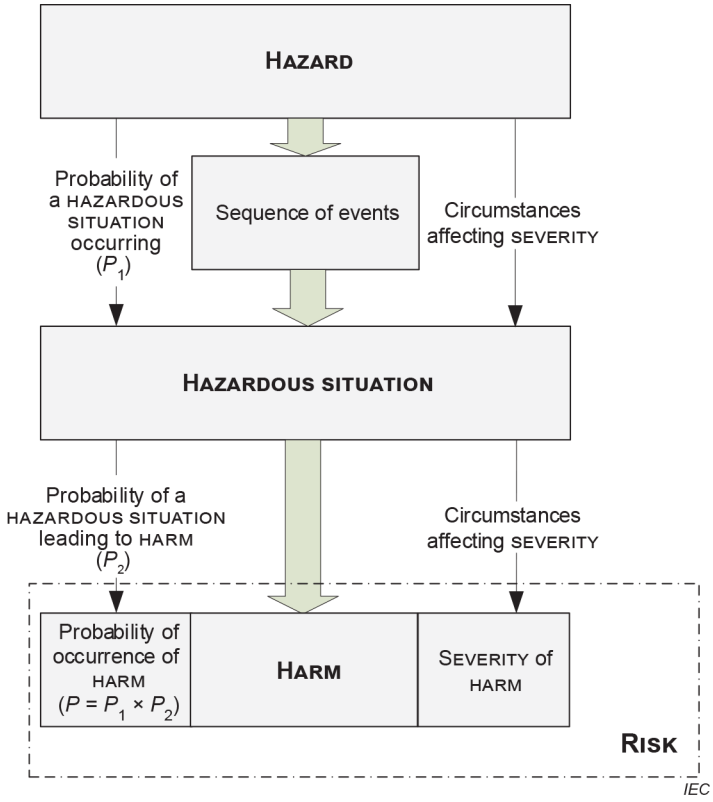

NOTE 1 Depending on the complexity of the ME EQUIPMENT or ME SYSTEM, a HAZARD can lead to multiple HAZARDOUS SITUATIONS, and each HAZARDOUS SITUATION can lead to multiple HARMS.

NOTE 2 The probability of occurrence of HARM (P) can be composed of separate P_1 and P_2 values.

NOTE 3 The thin arrows represent elements of RISK ANALYSIS and the thick arrows depict how a HAZARD can lead to HARM.

Figure A.8 – Illustration of the relationship of HAZARD, sequence of events, HAZARDOUS SITUATION and HARM

Subclause 3.49 – MAINS PART

A definition of MAINS PART is needed to identify the parts to which certain requirements apply. The definition given in the first and second editions of this standard depended on another defined term, “conductive connection.” During the development of this edition, a difficulty with the definition of “conductive connection” became apparent and the requirements were revised so the defined term was no longer needed. This necessitated a new definition of MAINS PART focussing on the MEANS OF PROTECTION that separate the MAINS PART from other parts.

Subclause 3.50 – MAINS PLUG

A definition of MAINS PLUG is needed to identify the plug to which certain requirements apply. The words “mains plug” without a definition would also cover other connectors within ME EQUIPMENT that carry MAINS VOLTAGE.

Subclause 3.56 – MAXIMUM MAINS VOLTAGE

Copyright International Electrotechnical Commission
Provided by IHS Markit under license with IEC
No reproduction or networking permitted without license from IHS Not for Resale, 08/26/2020 19:12:41 MDT

Several requirements and tests of this standard relate to the possibility that an unintended voltage originating from an external source becomes connected to the PATIENT or to certain parts of the ME EQUIPMENT. The actual magnitude of such a voltage is unknown but it is assumed to be related to the voltage of the SUPPLY MAINS in the location where the ME EQUIPMENT is used. See also the rationale for 8.5.3.

In the early stages of preparing this edition, a defined term “reference supply voltage” was introduced to avoid repetition of extensive wording. During the review of the National Committees’ comments on an early draft, it became apparent that there was some confusion between the defined term “reference supply voltage” and the undefined term “reference voltage” which was used in relation to the requirements for dielectric strength, CREEPAGE DISTANCES and AIR CLEARANCES.

In order to clarify the requirements, the term “reference supply voltage” has been replaced by MAXIMUM MAINS VOLTAGE and “reference voltage” has been replaced by the defined terms WORKING VOLTAGE and PEAK WORKING VOLTAGE.

Subclause 3.57 – MAXIMUM PERMISSIBLE WORKING PRESSURE

The MAXIMUM PERMISSIBLE WORKING PRESSURE is decided by a competent person, taking into account the original design specification, the manufacturer's rating, the current condition of the vessel and the circumstances of use.

In some countries, the figure could be reduced from time to time.

Subclause 3.58 – MEANS OF OPERATOR PROTECTION

See the rationale for 8.5.1.

Subclause 3.59 – MEANS OF PATIENT PROTECTION

See the rationale for 8.5.1.

Subclause 3.60 – MEANS OF PROTECTION

One guiding principle in the development of the third edition of this standard was to make it less prescriptive than the second edition, especially Clauses 17 and 20 of the second edition. The concept of MEANS OF PROTECTION was conceived as a generic one that could cover a number of things such as PROTECTIVE EARTH CONNECTIONS, BASIC INSULATION, SUPPLEMENTARY INSULATION, impedances, etc; and that might also be expanded to include other things which serve in the same capacity but have not yet been envisaged or are not yet practical. This concept, with the general requirement for ME EQUIPMENT to have two MEANS OF PROTECTION, fitted in well with the single fault philosophy, which all agreed was to be retained in the third edition. It enables a consistent approach to carry through a design effort without getting bogged down in the wordy prescriptive subclauses.

The concept also fitted in well when it was decided to differentiate protection of PATIENTS from protection of OPERATORS.

Some National Committee comments during the development of this edition suggested that the concept could be extended to apply to protection against HAZARDS other than electric shock. However it was decided that such a change would not be justified by the benefits.

Subclause 3.63 – MEDICAL ELECTRICAL EQUIPMENT

The present definition of ME EQUIPMENT excludes multiple connections to the same particular SUPPLY MAINS, but does not exclude different connectors to different particular SUPPLY MAINS. However, connection to more than one of different SUPPLY MAINS at the same time should be avoided. While it might be possible to design equipment with provision to be connected simultaneously to two different SUPPLY MAINS in an electrically safe manner, the particular HAZARDOUS SITUATIONS that might arise have not been identified in this standard.

--`,,```,,,,````-`-`,,`,,`,`,,`---

Copyright International Electrotechnical Commission
Provided by IHS Markit under license with IEC
No reproduction or networking permitted without license from IHS Not for Resale, 08/26/2020 19:12:41 MDT

This standard applies several terms to describe ME EQUIPMENT, ACCESSORIES and ME EQUIPMENT parts. They are FIXED (3.30), STATIONARY (3.118), TRANSPORTABLE (3.130), MOBILE (3.65), PORTABLE (3.85), HAND-HELD (3.37) and BODY-WORN (3.144). To help in understanding the relationship of these terms, the chart in Figure A.20 was developed.

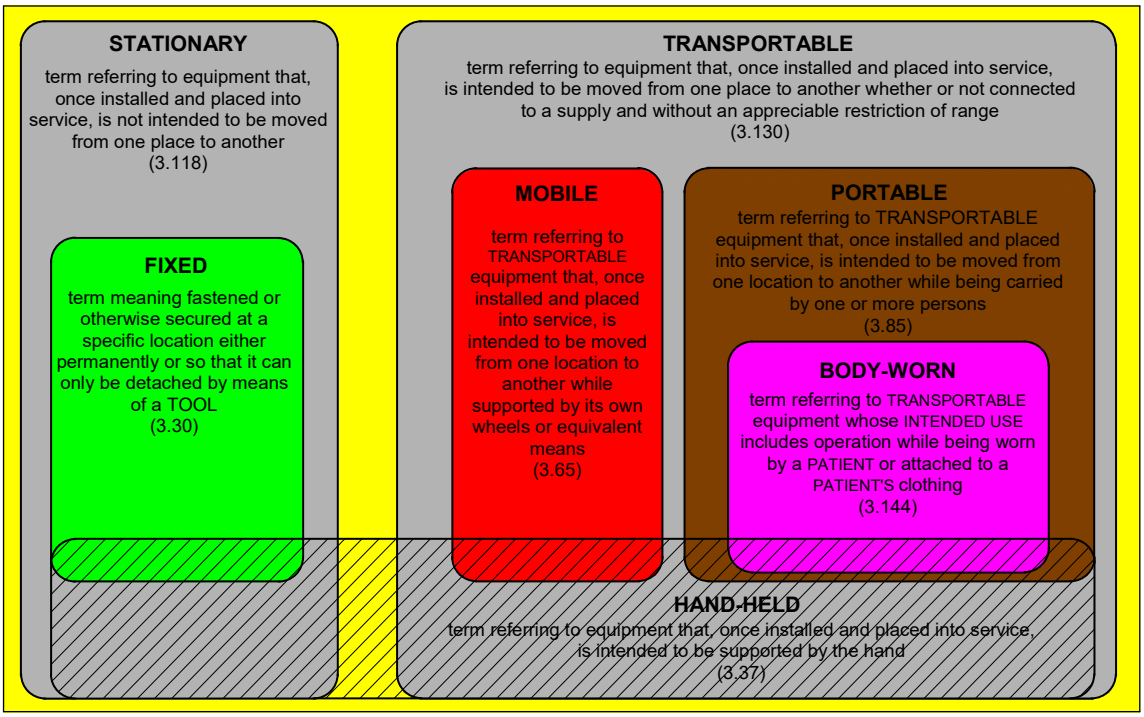

Figure A.20 – Relationship of the terms used to describe equipment, ACCESSORIES or equipment parts

Subclause 3.64 – MEDICAL ELECTRICAL SYSTEM

It is common practice for MANUFACTURERS, RESPONSIBLE ORGANISATIONS and OPERATORS to connect ME EQUIPMENT and other medical or non-medical equipment to MULTIPLE SOCKET-OUTLETS. The inclusion of such arrangements within the definition of ME SYSTEM brings them within the scope of this standard and thus allows appropriate requirements to be specified for BASIC SAFETY and ESSENTIAL PERFORMANCE.

To minimize the impairment of the safety level of this standard, the connection of a MULTIPLE SOCKET-OUTLET to the SUPPLY MAINS is subject to certain conditions. Subclause 16.9.2.1 requires that MULTIPLE SOCKET-OUTLETS are constructed to comply with the requirements from this standard applying to ME EQUIPMENT.

Subclause 3.66 – MODEL OR TYPE REFERENCE

The MODEL OR TYPE REFERENCE is intended to establish the relationship of the ME EQUIPMENT to commercial and technical publications, to ACCOMPANYING DOCUMENTS and between separable parts of ME EQUIPMENT. It is also important for identifying of ME EQUIPMENT or ACCESSORIES in case of a safety alert or other required field action.

Subclause 3.67 – MULTIPLE SOCKET-OUTLET

The definition is derived from IEC 60884-1.

In the second edition of IEC 60601-1-1 [13], there were definitions for multiple portable socket-outlet and auxiliary mains socket-outlet. In this edition, these definitions have been merged.

Copyright International Electrotechnical Commission
Provided by IHS Markit under license with IEC
No reproduction or networking permitted without license from IHS
Not for Resale, 08/26/2020 19:12:41 MDT

A single socket-outlet forming part of an equipment is also considered a MULTIPLE SOCKET-OUTLET.

MULTIPLE SOCKET-OUTLETS are sometimes necessary and offer advantages and disadvantages, which have to be investigated in order to establish a balance. MULTIPLE SOCKET-OUTLETS might be necessary for the following reasons:

– to minimize the number of POWER SUPPLY CORDS lying on the floor;
– to allow all the equipment necessary for proper treatment or diagnosis to be used despite an insufficient number of FIXED mains socket-outlets;
– to improve mobility by having all equipment on one trolley;
– to reduce potential differences within the protective earth wiring to below those that occur in some FIXED installations.

The use of MULTIPLE SOCKET-OUTLETS should be avoided as far as possible for the following reasons:

– combined EARTH LEAKAGE CURRENTS could result in:
  - excessive EARTH LEAKAGE CURRENT in NORMAL CONDITION,
  - excessive TOUCH CURRENT in the SINGLE FAULT CONDITION of the broken PROTECTIVE EARTH CONDUCTOR of the MULTIPLE SOCKET-OUTLET supply cable;
– availability of the SUPPLY MAINS depends on the reliability of a single FIXED mains socket-outlet;
– a complete interruption of electrical supply is possible and might require a long set-up time to reactivate the complete ME SYSTEM;
– only one PROTECTIVE EARTH CONNECTION to the electrical installation is provided; this is less reliable than when each part of the ME SYSTEM is directly earthed;
– the protective earth resistance is increased.

The optimum solution includes installing an adequate number of FIXED mains socket-outlets according to appropriate installation rules.

Subclause 3.68 – NETWORK/DATA COUPLING

The definition of NETWORK/DATA COUPLING has been written so as not to be restricted to any particular technology, such as electronic transmission along wires. The definition allows for wireless electromagnetic transmission, infra-red, optical, etc., as well as any future technology.

Subclause 3.73 – OPERATOR

The OPERATOR is defined as the person who handles the equipment, which could be ME EQUIPMENT or any item of equipment in the context of an ME SYSTEM. This person could be:

– a health care professional using the equipment with a PATIENT,
– either a PATIENT or a layperson assisting a PATIENT in a home-care environment,
– a person who is using the equipment to compensate or alleviate the effects of disease, injury or disability, or
– the person that installs, assembles, maintains or repairs the equipment.

People who install, assemble, maintain or repair the equipment are also referred to in this standard as SERVICE PERSONNEL.

Many requirements in this standard are constructed so that SERVICE PERSONNEL experience the same RESIDUAL RISK as the person who uses the equipment for its INTENDED USE. However, SERVICE PERSONNEL, who are often engineers or engineering technicians, are expected to have certain competencies and to take account of the technical description. Other OPERATORS are expected to have different competencies and to follow the instructions for use. Therefore, this standard presumes in certain circumstances that the safety of SERVICE PERSONNEL

--`,,`,,`-`-`,,`,,`,`,,`---
Copyright International Electrotechnical Commission
Provided by IHS Markit under license with IEC
No reproduction or networking permitted without license from IHS Not for Resale, 08/26/2020 19:12:41 MDT

depends partly on their knowledge and training to take appropriate precautions when gaining access to hazardous parts. The other OPERATORS are presumed to be competent to use the ME EQUIPMENT or ME SYSTEM but are not necessarily competent to avoid RISKS that can arise during servicing.

Subclause 3.75 – OXYGEN RICH ENVIRONMENT

At a 25 % oxygen concentration, the increase in the burning rate of a paper strip is only moderate (30 %) (per NFPA 99 [42]). In NFPA 99, 23,5 % is defined to be oxygen-enriched atmosphere that requires protective measures, but it allows this value also for oxygen chambers at pressures of more than 200 kPa. NASA allows concentrations of 25,9 % in its space shuttles (NFPA 53 [41]). UL 2601-1 [44] uses 25 % as threshold value. A sample of epoxy circuit board material burns incompletely at 20,9 % and 25,9 % (burning length of 3 cm and 8,3 cm) but completely at 30 % according to Rimanosky, E.M. et al., ASTM STP 1267 [36].

When first considering the relationship between flame rate and the amount of oxygen, it would seem reasonable that the flame rate would be proportional to the total locally available amount of oxygen, which is given by the partial pressure. However, experience shows that this is only true to a degree. Figures C-1.2.2(a) and (b) in NFPA 53:1999 and Figure A.3.3.14.4 in NFPA 99:2002 show that for paper strips the increase of flame rate with oxygen concentration at a set absolute pressure is stronger than the increase of flame rate with absolute pressure at a set concentration. For the borderline “complete combustion” to “incomplete combustion” the oxygen concentration seems to come to the same number (14 %) at high pressures, independent of the absolute (and partial) pressure. Therefore, to be on the safe side, two numbers are given in the definition. The concentration limit makes sure that for smaller ambient pressures than one atmosphere the danger does not increase. The partial pressure limit makes sure that for higher pressures (e.g. in oxygen chambers) the situation is safe.

Subclause 3.77 – PATIENT AUXILIARY CURRENT

PATIENT AUXILIARY CURRENT is a current that is necessary for:

– the ME EQUIPMENT to perform its function, e.g. electrical impedance imaging, monitoring of respiration by impedance changes;

– monitoring the correct operation of the ME EQUIPMENT, e.g. contact impedance of electrodes with the PATIENT;

– the functioning of the ME EQUIPMENT;

or that is incidental to the functioning of the ME EQUIPMENT. An example is the bias current of an amplifier for physiological signals.

PATIENT AUXILIARY CURRENT could have a function, but not a physiological function, or it could have no function.

Subclause 3.78 – PATIENT CONNECTION

One of the HAZARDS associated with the application of PATIENT CONNECTIONS is the fact that LEAKAGE CURRENT can flow through the PATIENT via the PATIENT CONNECTIONS. Particular limits are placed on the magnitude of these currents, both in the NORMAL CONDITION and in various fault conditions.

NOTE The current that flows through the PATIENT between various PATIENT CONNECTIONS is known as PATIENT AUXILIARY CURRENT. The LEAKAGE CURRENT that flows through the PATIENT to earth is known as PATIENT LEAKAGE CURRENT.

The definition of PATIENT CONNECTION is intended to ensure the identification of each individual part of the APPLIED PART between which current could flow as PATIENT AUXILIARY CURRENT, and from which PATIENT LEAKAGE CURRENT could flow into an earthed PATIENT.

Copyright International Electrotechnical Commission
Provided by IHS Markit under license with IEC
No reproduction or networking permitted without license from IHS Not for Resale, 08/26/2020 19:12:41 MDT

In some cases it will be necessary to carry out PATIENT LEAKAGE CURRENT and PATIENT AUXILIARY CURRENT measurements to determine which parts of the APPLIED PARTS are individual PATIENT CONNECTIONS.

PATIENT CONNECTIONS are not always accessible to touch. Any conductive parts of the APPLIED PART that come into electrical contact with the PATIENT, or which are prevented from doing so only by insulation or air gaps that do not comply with the relevant dielectric strength tests or AIR CLEARANCE and CREEPAGE DISTANCE requirements specified in this standard, are PATIENT CONNECTIONS. See also the rationale for 3.8.

Examples include the following.

– A table top supporting a PATIENT is an APPLIED PART. Sheets do not provide adequate insulation and the conductive parts of the table top would therefore be classified as PATIENT CONNECTIONS.

– The administration set or needle of an infusion controller is an APPLIED PART. Conductive parts of the controller separated from the (potentially conducting) fluid column by inadequate insulation would be PATIENT CONNECTIONS.

Where an APPLIED PART has a surface of insulating material, 8.7.4.7 e) specifies that it is tested using foil or saline solution. This is then considered as a PATIENT CONNECTION.

Subclause 3.79 – PATIENT ENVIRONMENT

It is difficult for this standard to define dimensions for the volume in which diagnosis, monitoring or treatment occurs. The dimensions for the PATIENT ENVIRONMENT given in Figure A.9 have been justified in practice.

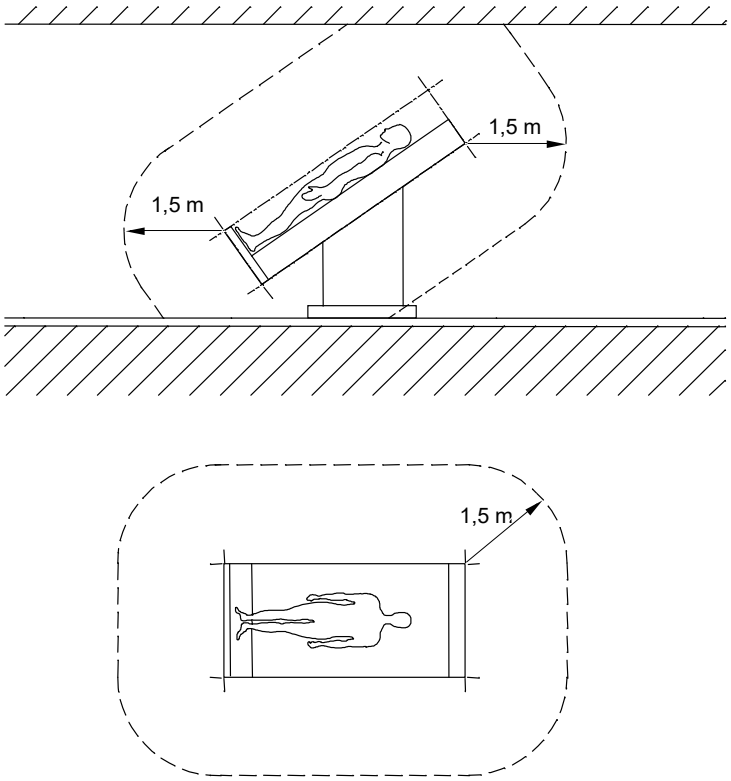

IEC 2431/05

NOTE The dimensions in the figure show minimum extent of the PATIENT ENVIRONMENT in a free surrounding.

Figure A.9 – Example of PATIENT ENVIRONMENT

Subclause 3.81 – PEAK WORKING VOLTAGE

Copyright International Electrotechnical Commission
Provided by IHS Markit under license with IEC
No reproduction or networking permitted without license from IHS Not for Resale, 08/26/2020 19:12:41 MDT

This definition was taken from IEC 60950-1:2005, subclause 1.2.9.8. Use of this term along with the defined term WORKING VOLTAGE should make the INSULATION CO-ORDINATION requirements incorporated from IEC 60950-1 easier to understand for those already familiar with that standard. See also the rationale for 3.56.

Subclause 3.99 – REINFORCED INSULATION

The term “insulation system” does not imply that the insulation has to be one homogeneous piece. It could comprise several layers that cannot be tested separately as SUPPLEMENTARY or BASIC INSULATION.

Subclause 3.110 – SECONDARY CIRCUIT

This definition is based on the definition of the same term in IEC 60950-1:2005, subclause 1.2.8.5 and identifies circuits that are subject to lower transient overvoltages than the MAINS PART and therefore have lower values for dielectric strength test voltages and AIR CLEARANCES.

Subclause 3.112 – SEPARATION DEVICE

Assembly of equipment into an ME SYSTEM could involve connections that transfer power or signals. In both cases, the same separation requirements are needed.

Subclause 3.115 – SIGNAL INPUT/OUTPUT PART

If a SIGNAL INPUT/OUTPUT PART carries electrical signals, or if it carries non-electrical signals but nevertheless introduces a conductive connection to the other equipment (e.g. through an optical fibre cable with a metal sheath), appropriate separation from other circuits can be necessary to satisfy the requirements of this standard. Alternatively a SIGNAL INPUT/OUTPUT PART could have no conductive connections, in which case it will automatically satisfy the requirements for electrical BASIC SAFETY.

Subclause 3.120 – SUPPLY MAINS

An external d.c. power source (e.g. in an ambulance) is considered as a SUPPLY MAINS. ME EQUIPMENT specified for connection to such a power source has to satisfy all requirements for mains powered ME EQUIPMENT. In the past, some ME EQUIPMENT specified for such a power source has had a direct connection between the ENCLOSURE and one side of the supply, presumed to be at earth potential. In the event of interruption of the connection to this side of the supply, the ENCLOSURE of such ME EQUIPMENT assumes the supply potential and would therefore exceed the specified limit for TOUCH CURRENT. The first and second editions of this standard were intended to exclude such an arrangement, but this was not always understood by users of the standard. This rationale has been added to clarify the requirement.

Subclause 3.132 – TYPE B APPLIED PART

TYPE B APPLIED PARTS provide the lowest degree of PATIENT protection of all the types of APPLIED PART and are not suitable for DIRECT CARDIAC APPLICATION.

The PATIENT CONNECTION(S) of a TYPE B APPLIED PART could be:

– PROTECTIVELY EARTHED;

– connected to earth but not PROTECTIVELY EARTHED; or

– floating, but not isolated from earth to the degree that would be required for a TYPE BF APPLIED PART.

Subclause 3.133 – TYPE BF APPLIED PART

TYPE BF APPLIED PARTS provide a degree of PATIENT protection higher than provided by TYPE B APPLIED PARTS. This is achieved by isolating the PATIENT CONNECTIONS from earthed parts and other ACCESSIBLE PARTS of the ME EQUIPMENT, thus limiting the magnitude of current that would flow through the PATIENT in the event that an unintended voltage originating from an external source is connected to the PATIENT, and thereby applied between the PATIENT CONNECTIONS and earth. However, TYPE BF APPLIED PARTS are not suitable for DIRECT CARDIAC APPLICATION.

Copyright International Electrotechnical Commission
Provided by IHS Markit under license with IEC
No reproduction or networking permitted without license from IHS Not for Resale, 08/26/2020 19:12:41 MDT

Subclause 3.134 – TYPE CF APPLIED PART

TYPE CF APPLIED PARTS provide the highest degree of PATIENT protection. This is achieved by increased isolation of the PATIENT CONNECTION from earthed parts and other ACCESSIBLE PARTS of the ME EQUIPMENT, further limiting the magnitude of possible current flow through the PATIENT. TYPE CF APPLIED PARTS are suitable for DIRECT CARDIAC APPLICATION insofar as PATIENT LEAKAGE CURRENT is concerned, though they could be unsuitable in other respects, such as sterility or biocompatibility.

Subclause 3.139 – WORKING VOLTAGE

This definition is taken from IEC 60950-1:2005, subclause 1.2.9.6. Use of this term along with the defined term PEAK WORKING VOLTAGE should make the INSULATION CO-ORDINATION requirements incorporated from IEC 60950-1 easier to understand for those already familiar with that standard. See also the rationale for 3.56.

Subclause 3.150 – INFORMATION SIGNAL

ALARM SIGNALS are only generated because of the presence of an ALARM CONDITION. In contrast, INFORMATION SIGNALS are those that are generated regardless of whether or not an ALARM CONDITION is present. The waveform of a physiological signal and the associated numeric are considered INFORMATION SIGNALS as they are independent of ALARM CONDITIONS. INFORMATION SIGNALS can frequently convey information that is “alarming” to the OPERATOR but are not, in and of themselves an ALARM SIGNAL.

EXAMPLE 1 The decreasing tonal frequency of the auditory INFORMATION SIGNAL of some pulse oximeters. The decreased tone is “alarming” to the OPERATOR, but in itself is not an ALARM SIGNAL.

EXAMPLE 2 An electrocardiograph waveform indicating ventricular fibrillation.

EXAMPLE 3 A heart rate of 20 beats/min.

Subclause 3.152 – MAXIMUM EQUIPMENT PRESSURE

The maximum pressure to which a part of ME EQUIPMENT can be subjected in NORMAL CONDITION and SINGLE FAULT CONDITION is determined by analysis and where needed, measurements. Traditionally it has been considered to be whichever is the highest of the following:

- the RATED maximum supply pressure from an external source;
- the pressure setting of a pressure-relief device provided as part of the assembly; or
- the maximum pressure that can be developed by a source of pressure that is part of the assembly, unless the pressure is limited by a pressure-relief device.

The RATED maximum supply pressure is marked on the ME EQUIPMENT (7.2.18). If the maximum source pressure rating is based on a regulator at supply, consider failure of the regulator. MAXIMUM EQUIPMENT PRESSURE might be that of the rating of regulator at the pressure input connector of the ME EQUIPMENT (or specified as required during installation), or the rating of the pressure relief device provided within the ME EQUIPMENT. Pressure (or vacuum) systems will typically directly control pressure (or vacuum) with a pressure regulator and a pressure relief device. The single-fault pressure becomes the relief device pressure (failed regulator). Electronics (or electromechanical circuits) could indirectly regulate pressure (or vacuum). If pressure is from a pump or compressor, there could be regulation provided by motor drive from power convertor or invertor system. If pressure is from a heat source, then consider faults to electronic ignition or temperature control system. Typically a pressure relief device would provide pressure limiting backup to electronic or electromechanical faults. In any case, the MAXIMUM EQUIPMENT PRESSURE in SINGLE FAULT CONDITION needs to be considered.

When considering the HAZARDOUS SITUATION that overpressure (or underpressure) can present, the concern is the bursting/rupture (or implosion) of a part could lead to HARM. The gauge pressure speaks to the bursting (or implosion) HAZARDOUS SITUATION most directly since

--`,,```,,,,````-`-`,,`,,`,`,,`---

Copyright International Electrotechnical Commission
Provided by IHS Markit under license with IEC
No reproduction or networking permitted without license from IHS Not for Resale, 08/26/2020 19:12:41 MDT

it is the difference between internal absolute pressure and outside absolute pressure. The hydraulic test on pressure vessels in 9.7.5 is based on the maximum equipment gauge pressure. Pressure components are normally rated with a gauge pressure (e.g. kPaG). An absolute pressure rating could be translated to a gauge pressure rating:

Gauge pressure = inside absolute pressure – outside (e.g. atmospheric) absolute pressure.

ME EQUIPMENT MANUFACTURERS are required to specify intended ranges for absolute air pressure (temperature, and humidity) for modes, transport and storage, and operating. With home care equipment, the additional mode of transport and storage between uses needs to be specified. Subclause 7.2.17 requires these ranges on shipping containers, and 7.9.3.1 requires them in the technical description that users receive. This gives persons the environmental ranges that designers considered when selecting pressure components.

Subclause 4.1 –Conditions for application to ME EQUIPMENT or ME SYSTEMS

The condition for application of RISK MANAGEMENT to ME EQUIPMENT and ME SYSTEMS includes reasonably foreseeable misuse. The MANUFACTURER identifies foreseeable misuse as part of the RISK ANAYLSIS (see 4.2). This identification could include the results of a USABILITY ENGINEERING PROCESS.

Subclause 4.2 –RISK MANAGEMENT PROCESS for ME EQUIPMENT or ME SYSTEMS

A change introduced in the third edition of this standard is that, in specifying minimum BASIC SAFETY and ESSENTIAL PERFORMANCE requirements, provision is made for assessing the adequacy of the design PROCESS where this provides an appropriate alternative to the application of laboratory testing with specific pass/fail criteria, (e.g. in assessing the safety of new technologies). Application of this principle leads to the introduction of a general requirement to carry out elements of a RISK MANAGEMENT PROCESS as part of demonstrating compliance with this standard.

The MANUFACTURER is responsible for ensuring that the design and construction of the ME EQUIPMENT renders it suitable for its INTENDED USE and that any RISKS that are associated with its use are acceptable when weighed against the benefits. ISO 14971 specifies a PROCEDURE for the MANUFACTURER to identify HAZARDS associated with the ME EQUIPMENT or ME SYSTEM and its ACCESSORIES, to estimate and evaluate the RISKS associated with those HAZARDS and to control those RISKS.

The scope of this standard is confined to type examination of ME EQUIPMENT and ME SYSTEMS; it does not extend to lifecycle monitoring. For this reason, the monitoring of production and post-production information and the planning thereof, as required by ISO 14971:2019, is excluded from the RISK MANAGEMENT PROCESS described in this standard. The requirement in ISO 14971:2019 for periodic review of the suitability of the RISK MANAGEMENT PROCESS is also excluded.

Compliance with the clauses of this standard that contains specific, verifiable requirements is presumed to reduce the associated RISK(S) to an acceptable level.

The MANUFACTURER of ME SYSTEMS should make this determination on a system level. The MANUFACTURER should assess RISKS resulting from the fact that individual system components have been integrated into one system. This assessment should include all aspects of the information exchanged between the system components. Even when these components are non-ME ELECTRICAL components, the potential RISK related to the integration of these components into the ME SYSTEM need to be considered. Further requirements for the integration of non-medical equipment into an ME SYSTEM are described in Clause 16. It gives the requirements for an ME SYSTEM and how RISKS associated with non-ME EQUIPMENT are addressed.

--`,,```,,,,````-`-`,,`,,`,`,,`---

Copyright International Electrotechnical Commission
Provided by IHS Markit under license with IEC
No reproduction or networking permitted without license from IHS Not for Resale, 08/26/2020 19:12:41 MDT

It should be noted that compliance with ISO 14971 does not require that the MANUFACTURER have a formal quality system in place.

This RISK MANAGEMENT PROCESS results in a set of RECORDS and other documents: the RISK MANAGEMENT FILE. Compliance of the RISK MANAGEMENT PROCESS is checked by inspection of the RISK MANAGEMENT FILE.

In all cases, the MANUFACTURER is to be considered the expert on the device being developed and on the HAZARDS associated with its use.

Where compliance tests are by inspection or review of the RISK MANAGEMENT FILE, only the relevant parts of the RISK MANAGEMENT FILE need to be reviewed, e.g. MANUFACTURER'S calculations or test results, or the determination of RISK acceptability.

Some requirements of this standard use the term unacceptable RISK, other requirements use the term HAZARDOUS SITUATION. All unacceptable RISKS result from a HAZARDOUS SITUATION, not all HAZARDOUS SITUATIONS result in an unacceptable RISK.

In deciding which phrase to use in a requirement the following rule has been used.

– The phrase “no unacceptable RISK” is used when the MANUFACTURER has to, or is permitted to, make a judgement about the acceptability of the RISK. This judgement is to be supported by an appropriate rationale such as experience, historical data, etc.
– The phrase “no HAZARDOUS SITUATION” is used when the MANUFACTURER has to demonstrate (e.g. by technical drawing or technical description) that there is no exposure to a HAZARD or no possibility of HARM can develop. In these cases the only determination a MANUFACTURER has to make is whether or not a HAZARDOUS SITUATION exists; this determination is made regardless of the acceptability of the RISK that could develop from that HAZARDOUS SITUATION.
– The phrase “no HAZARD” is never used.

The following provides guidance on how to use several elements of the RISK MANAGEMENT PROCESS as defined in ISO 14971 within the context of IEC 60601-1.

– **INTENDED USE:** The INTENDED USE is determined at the highest level of the ME EQUIPMENT or ME SYSTEM and should be used in identifying HAZARDS or HAZARDOUS SITUATIONS related to the use of the ME EQUIPMENT or ME SYSTEM. The INTENDED USE is not (or very rarely) used in the evaluation of specific components. Further, the INTENDED USE is the primary input when determining what aspects of the clinical functions of the ME EQUIPMENT or ME SYSTEM constitute ESSENTIAL PERFORMANCE as required by 4.3.

– **HAZARD identification:** This standard and ISO 14971 require identification of all HAZARDS and HAZARDOUS SITUATIONS associated with the ME EQUIPMENT or ME SYSTEM, regardless of whether they are identified in an international safety standard or not (see 4.2.2, Note 1, and 4.2.3.2). This holds for NORMAL USE, reasonably foreseeable misuse and SINGLE FAULT CONDITIONS. However, when HAZARDS or HAZARDOUS SITUATIONS identified in this standard cannot occur for the specific ME EQUIPMENT or ME SYSTEM, the HAZARD identification would be performed only to document that the corresponding requirements of this standard do not apply. In this case, further RISK ASSESSMENT or VERIFICATION of compliance is not required. When a requirement does apply, no HAZARD identification is necessary (because the standard has already done so). For example, no HAZARD of electric shock arises in ME EQUIPMENT having no voltages capable of producing LEAKAGE CURRENTS that exceed the applicable limits as specified in 8.4.2 c).

– **RISK EVALUATION:** RISK is evaluated at two points in the RISK MANAGEMENT PROCESS—before and then again after implementation of RISK CONTROL measures. Evaluation before implementation of RISK CONTROL measures is applicable to the requirements of this standard only in order to demonstrate that the associated RISK is acceptable without applying a requirement. However, when this standard requires that RISKS related to a specific requirement remain acceptable or that no unacceptable RISK occurs in relation to a specific requirement, compliance is checked by inspection of the RISK MANAGEMENT FILE for the HAZARDS or HAZARDOUS SITUATIONS related to this requirement and for OBJECTIVE

Copyright International Electrotechnical Commission
Provided by IHS Markit under license with IEC
No reproduction or networking permitted without license from IHS Not for Resale, 08/26/2020 19:12:41 MDT

EVIDENCE (e.g. by MANUFACTURER'S calculations, analyses or test results) that the corresponding RISKS are judged to be acceptable based on the MANUFACTURER'S criteria for acceptability of RISK. The effectiveness of the RISK CONTROL measures is evaluated in accordance with subclause 7.2 of ISO 14971:2019.

– **RISK reduction:** When a requirement of this standard requires implementation of specific RISK CONTROL measures to assure that the associated RISK is acceptable, compliance is checked by either of the following:

  - by assuring that the specific measures have been implemented, in which case no RISK MANAGEMENT and no evaluation of RESIDUAL RISK are required because the RISKS are assumed to be reduced to an acceptable level by the presence of the specific measures (meeting the objective requirements of this standard), or
  - by inspection of the RISK MANAGEMENT FILE for the HAZARDS or HAZARDOUS SITUATIONS identified in the requirement in absence of the measures specified by the requirement and for OBJECTIVE EVIDENCE (e.g. by MANUFACTURER'S calculations, analyses or test results) that the corresponding RISKS are judged to be acceptable.

  Subclauses 7.2.2 for detachable components and 7.2.17 for protective packaging are examples where special markings are required unless no unacceptable RISKS occur. So, either the markings must be provided or the RISKS in absence of those markings must be evaluated and judged acceptable. Another example is 15.4.1 a), for the design and construction of connector plugs.

– **Benefit-RISK analysis:** A benefit-RISK analysis according to subclause 7.4 of ISO 14971:2019 is only required when the RESIDUAL RISK associated with a specific HAZARD or HAZARDOUS SITUATION remains unacceptable using the criteria for RISK acceptability recorded in the RISK MANAGEMENT plan and further RISK CONTROL is not practicable. Such benefit-RISK analyses are not required when the RESIDUAL RISKS are judged acceptable or when the ME EQUIPMENT or ME SYSTEM complies with specific requirements of this standard. Subclause 11.1.2 is one of the few examples where a RISK/benefit analysis is required when temperature limits are exceeded to achieve a clinical purpose (see Table 24, footnote [b]).

Subclause 4.3 – ESSENTIAL PERFORMANCE

During the initial RISK ANALYSIS, the MANUFACTURER identifies the performance of the clinical fuction(s) of the ME EQUIPMENT or ME SYSTEM that is necessary for achieving the INTENDED USE. The MANUFACTURER also identifies other qualitative and quantitative characteristics that could affect the safety of the ME EQUIPMENT or ME SYSTEM.

The performance limits specified by the MANUFACTURER could be anywhere within the full range of intended performance in NORMAL CONDITION and SINGLE FAULT CONDITION, to no performance.

The MANUFACTURER then determines if the loss or failure to perform within specified limits would result in a RISK to the PATIENT. The estimate is often made with the assumption that the performance aspect in question has been lost or degraded beyond the specified limits (i.e. P_1 in Figure A.8 is 100 %). The MANUFACTURER takes into account the probability of a HAZARDOUS SITUATION leading to HARM (P_2 in Figure A.8) as well as the SEVERITY of that HARM. In some instances P_2 could also be 100 %, in which case the RISK estimate is based entirely on the SEVERITY of the HARM. When considering the RISK associated with a level of degraded performance, which might include full loss, the analysis should include expected measures as prescribed in the ACCOMPANYING DOCUMENTS, which might return some or all performance after a delay including service to the ME EQUIPMENT or ME SYSTEM, or a return of some or all of the PATIENT'S medical care with back-up medical care measures.

The MANUFACTURER then evaluates the RISK using their established RISK acceptance criteria. If the RISK is unacceptable, then the identified performance is ESSENTIAL PERFORMANCE because RISK reduction is required to achieve an acceptable level of RESIDUAL RISK.

--`,,```,,,,````-`-`,,`,,`,`,,`---

Copyright International Electrotechnical Commission
Provided by IHS Markit under license with IEC
No reproduction or networking permitted without license from IHS Not for Resale, 08/26/2020 19:12:41 MDT

Once the ESSENTIAL PERFORMANCE is identified, the MANUFACTURER puts in place RISK CONTROL measures that are appropriate to reduce the RISK to an acceptable level. When conducting the RISK CONTROL option analysis, the MANUFACTURER is to follow the priority order listed in ISO 14971, namely:

a) inherent safety by design;

b) protective measures;

c) information for safety.

The RISK CONTROL measures selected need to be reasonably practicable and consistent with the generally accepted technology. For example, it might be possible to build a critical care ventilator that will continue to function in the presence of a single component failure, but, given the generally accepted technology, this is not practicable. Therefore, the MANUFACTURER might rely on a protective measure, such as an ALARM SYSTEM, to alert the OPERATOR of the failure so the OPERATOR can take appropriate and timely action to prevent the onset of HARM. The ALARM SIGNAL coupled with required OPERATOR training might be adequate RISK CONTROL measures to reduce the RISK arising from the loss or degradation of the identified performance to an appropriate level, i.e. the RESIDUAL RISK is acceptable. These RISK CONTROL measures can be integral with the consideration of ESSENTIAL PERFORMANCE.

Of course, the RISK CONTROL measure has to be sufficiently independent such that the condition that causes the loss or degradation of the identified performance does not compromise the effectiveness of the RISK CONTROL measure. This is consistent with the two MEANS OF PROTECTION philosophy employed in the IEC 60601 series. For example, an ALARM SYSTEM intended to alert the OPERATOR that the SUPPLY MAINS has been interrupted could not depend on the SUPPLY MAINS as the sole source of its power. A back-up battery could be used to power the ALARM SYSTEM if the SUPPLY MAINS is interrupted.

In RISK CONTROL, timing is everything. If there is insufficient time from the onset of the event (interruption of the SUPPLY MAINS) for the OPERATOR to register that an ALARM CONDITION has occurred and take appropriate action to prevent the onset of HARM, then the ALARM SYSTEM alone would not be an effective RISK CONTROL measure. A back-up power source to keep the ME EQUIPMENT operating for a period of time sufficient for the OPERATOR to take the necessary corrective action could also be required.

As with all aspects of the RISK MANAGEMENT PROCESS, the identification of ESSENTIAL PERFORMANCE can be iterative. The MANUFACTURER might have to revisit the process of determining what the ESSENTIAL PERFORMANCE is during the lifecycle of the ME EQUIPMENT or ME SYSTEM.

See also the rationale for 3.27.

Subclause 4.4– EXPECTED SERVICE LIFE

The EXPECTED SERVICE LIFE is the time period during which the ME EQUIPMENT or ME SYSTEM is expected to remain suitable for its INTENDED USE. It is also the period when all RISK CONTROL measures need to remain effective to ensure that RISKS remain acceptable.

The EXPECTED SERVICE LIFE needs to be determined by the MANUFACTURER, as part of the RISK MANAGEMENT PROCESS, as a precondition for assessing compliance with many requirements of this standard, such as 4.5, 4.7, 7.1.3, 8.6.3, 9.8.2 and 11.6.6.

In the ACCOMPANYING DOCUMENTS, the MANUFACTURER should provide information to allow the RESPONSIBLE ORGANIZATION to assess when the ME EQUIPMENT is approaching the end of its life. Such information should include the EXPECTED SERVICE LIFE as determined by the MANUFACTURER (e.g. in terms of years of service or number of uses) but could also include tests to be performed as part of preventive maintenance, or other criteria to allow the RESPONSIBLE ORGANIZATION to make an appropriate determination. The need for such information and the appropriate way to present it should be addressed as part of the RISK MANAGEMENT PROCESS.

--`,,```,,,,````-`-`,,`,,`,`,,`---

Copyright International Electrotechnical Commission
Provided by IHS Markit under license with IEC
No reproduction or networking permitted without license from IHS Not for Resale, 08/26/2020 19:12:41 MDT

In defining the EXPECTED SERVICE LIFE, the MANUFACTURER should assume that the RESPONSIBLE ORGANIZATION will follow the MANUFACTURER'S instructions for routine maintenance. See 7.9.2.13.

Subclause 4.5 – Alternative RISK CONTROL measures or test methods for ME EQUIPMENT or ME SYSTEMS

This subclause allows alternative means of achieving safety to those means specified in this standard. This is important as it permits a MANUFACTURER to use innovative solutions that are safe and can have other benefits, e.g. lower cost or better manufacturability.

Because it is often difficult to ascertain a sense of RISK acceptability for an individual RISK CONTROL measure or test method, the MANUFACTURER is permitted to use scientific data, clinical opinion, or comparative studies on a case-by-case basis to establish that the RESIDUAL RISK from applying an alternative remains acceptable.

Documentation in the RISK MANAGEMENT FILE should show that the RESIDUAL RISK achieved using the alternative means remains acceptable and is comparable to this standard. Comparative studies should take into account scientific studies referenced in this standard and applicable to the alternative means.

With Amendment 2, the application of the INSULATION CO-ORDINATION requirements in IEC 62368-1:2018 can be used as a MEANS OF OPERATOR PROTECTION (MOOP) for sub-assemblies/components that are built into ME EQUIPMENT. However, not all of the requirements for OPERATOR protection in IEC 62368-1:2018 have been integrated in Amendment 2. Only Clause 8 and one note in Clause 10 have been addressed. For the remainder of this document, the safety solutions in IEC 62368-1:2018 have not been taken into account in Amendment 2. These will be addressed during the development of the fourth edition of this document.

For IEC 62368-1:2018 certified sub-assemblies/components that are built into ME EQUIPMENT, Clause 7 and Clauses 9 to 15 (inclusive) of this standard are applied as stated. If a requirement in IEC 62368-1:2018 is related to OPERATOR safety and is in conflict with parts of Clause 7 and Clauses 9 to 15 (inclusive), it can be evaluated according to the detailed requirements of 4.5.

In all cases, the requirements for MEANS OF PATIENT PROTECTION (MOPP) in this standard still need to be applied.

Subclause 4.6 – ME EQUIPMENT or ME SYSTEM parts that contact the PATIENT

A part that unintentionally comes into contact with an unconscious, anaesthetized or incapacitated PATIENT can present the same RISKS as an APPLIED PART that necessarily has to contact the PATIENT. On the other hand, a part that an active PATIENT could reach out and touch might present no more RISK to that PATIENT than it presents to an OPERATOR.

The definition of APPLIED PART in the first and second editions of this standard failed to address this problem. The second amendment to the second edition extended the definition to include parts that can be brought into contact with the PATIENT, but the new definition continued to cause difficulties.

Since this standard now requires a RISK MANAGEMENT PROCESS to be followed, it is appropriate to use this PROCESS to establish whether such parts should be subject to the requirements for APPLIED PARTS or not.

The exclusion of marking requirements reflects the majority view of the National Committees that responded to an enquiry on the subject during the development of this edition. It would be confusing to OPERATORS if parts that are not intended to be APPLIED PARTS were marked like APPLIED PARTS.

Parts identified as needing to be subject to the requirements for APPLIED PARTS (except for marking) will typically contact PATIENTS less frequently than APPLIED PARTS, so the benefits of

Copyright International Electrotechnical Commission
Provided by IHS Markit under license with IEC
No reproduction or networking permitted without license from IHS Not for Resale, 08/26/2020 19:12:41 MDT

electrical separation from earth would be less. However in some cases, these parts might need to satisfy the requirements for TYPE BF APPLIED PARTS or TYPE CF APPLIED PARTS in order to provide an appropriate level of safety.

Subclause 4.7 – SINGLE FAULT CONDTION for ME EQUIPMENT

The requirement that ME EQUIPMENT is SINGLE FAULT SAFE effectively puts a lower limit on the probability of occurrence of HARM from a HAZARD. If this probability is achieved then the RISK of the HAZARD is acceptable. In all cases where this discussion refers to the SEVERITY or probability of a particular HAZARD, it is intended to refer to the probability or SEVERITY of the HARM resulting from that HAZARD.

SINGLE FAULT SAFE is a concept that flows from the single fault philosophy described in IEC/TR 60513 [12]. SINGLE FAULT SAFE is a characteristic of ME EQUIPMENT that assures BASIC SAFETY during its EXPECTED SERVICE LIFE. For a high SEVERITY HARM, application of a RISK MANAGEMENT PROCESS can conclude that the single fault concept does not achieve an acceptable RISK.

The probability of simultaneous occurrence of two single faults is considered small enough to be negligible, provided that:

a) a single fault causes operation of a protective device (e.g. a fuse, OVER-CURRENT RELEASE, safety catch, etc.) that prevents occurrence of a HAZARD, or

b) a single fault is discovered by an unmistakable and clearly discernible signal that becomes obvious to the OPERATOR, or

c) a single fault is discovered and remedied by periodic inspection and maintenance that is prescribed in the instructions for use. There is a finite probability that a second fault can arise before the next scheduled inspection and maintenance cycle. As with case a) above, for the probability of this double fault condition to be negligible, the probability of each fault has to be low. This means that the frequency of inspection and maintenance has to be high compared to the expected probability of occurrence of the fault. The longer the time that one SINGLE FAULT CONDITION remains present before being detected and rectified, the greater the probability that a second fault will arise. Therefore, the MANUFACTURER might need to explicitly consider the detection time in relation to the occurrence of a possible second fault as part of RISK ANALYSIS.

Non-exclusive examples of the categories a) to c) are:

– REINFORCED or DOUBLE INSULATION;

– CLASS I ME EQUIPMENT in case of a fault in BASIC INSULATION;

– abnormal indications of displays, defect in a redundant suspension cord causing excessive noise or friction;

– deterioration of a flexible PROTECTIVE EARTH CONDUCTOR that is moved in NORMAL USE.

Subclause 4.8 – Components of ME EQUIPMENT

Resistors bridging a MEANS OF PROTECTION

A resistor or group of series connected resistors (two or more), can bridge one or two MEANS OF PROTECTION (MOOP or MOPP), providing the following is observed:

– the resistor or group of resistors has a voltage rating twice the value of the WORKING VOLTAGE across the MEANS OF PROTECTION;

– the resistor or group of resistors can withstand dielectric strength tests according to 8.8.3 and considering the expected transient voltages that the component(s) will be subjected to during NORMAL USE over the EXPECTED SERVICE LIFE;

– the resistor or group of resistors has a power rating twice that expected in NORMAL USE;

– the resistor or group of resistors have a resistance value such that TOUCH CURRENT, PATIENT LEAKAGE CURRENT and PATIENT AUXILIARY CURRENT requirements are not exceeded;

Copyright International Electrotechnical Commission
Provided by IHS Markit under license with IEC
No reproduction or networking permitted without license from IHS Not for Resale, 08/26/2020 19:12:41 MDT

– the resistor or group of resistors have a construction that maintains the MOP separation requirements for CREEPAGE DISTANCE and AIR CLEARANCE (For a series group, separation at each component is additive making up the required separation.);

– the resistor or group of resistors are constructed such that their inductance is low;

– the resistor or group of resistors have a construction that cannot fail short-circuit; and

– when using a group of resistors they all need have the same resistance value and the voltage and power doubling requirement applies also to each component based on the expected WORKING VOLTAGE across that resistor in NORMAL USE.

Subclause 4.9 – Use of COMPONENTS WITH HIGH-INTEGRITY CHARACTERISITCS in ME EQUIPMENT

The first step to determine a COMPONENT WITH HIGH-INTEGRITY CHARACTERISTICS is to conduct a RISK ANALYSIS to find those characteristics that are required to maintain BASIC SAFETY or ESSENTIAL PERFORMANCE. Having done this, the appropriate component can be selected. Reference can be made to IEC component standards as part of the determination of the characteristics required.

TYPE TESTS of COMPONENTS WITH HIGH-INTEGRITY CHARACTERISTICS are only part of the required determination of suitability. Since a particular COMPONENT WITH HIGH-INTEGRITY CHARACTERISTICS has to function as intended or a HAZARD is likely to occur, additional considerations include as appropriate:

– continuous surveillance as part of the manufacturing PROCESS and also after assembly into the end product;

– particular characteristics of the device concerned;

– lot testing;

– calibration;

– control of manufacturing defects;

– maintenance;

– EXPECTED SERVICE LIFE of equipment;

– use of relevant component standards;

– failure mode characteristics;

– environmental conditions;

– anticipated misuse of equipment;

– interaction with other equipment.

Subclause 4.10 – Power supply

An alternating voltage is considered in practice to be sinusoidal if any instantaneous value of the waveform concerned differs from the instantaneous value of the ideal waveform at the same moment by no more than ± 5 % of the peak value of the ideal waveform.

A polyphase voltage system is considered to be symmetrical if neither the magnitude of its negative sequence components nor the magnitude of its zero sequence components exceeds 2 % of the magnitude of its positive sequence components.

A polyphase supply system is considered to be symmetrical if, when supplied from a symmetrical voltage system, the resulting current system is symmetrical. That is, the magnitude of neither the negative sequence current components nor the zero sequence current components exceeds 5 % of the magnitude of the positive sequence current components.

Clause 5 – General requirements for testing ME EQUIPMENT

In ME EQUIPMENT there could be many pieces of insulation, components (electrical and mechanical) and constructional features in which a failure would not produce a HAZARD to

Copyright International Electrotechnical Commission
Provided by IHS Markit under license with IEC
No reproduction or networking permitted without license from IHS Not for Resale, 08/26/2020 19:12:41 MDT

PATIENT, OPERATOR or surroundings, even though causing a deterioration in or a failure of performance of ME EQUIPMENT.

Subclause 5.1 – TYPE TESTS

The RISK MANAGEMENT PROCESS identifies the RISK CONTROL measures that are necessary to ensure that the ME EQUIPMENT is safe.

Unless otherwise specified in this standard, tests should not be repeated. This applies particularly to the dielectric strength tests, which are performed only at the MANUFACTURER'S site or in test laboratories.

In order to ensure that every individually produced item of ME EQUIPMENT conforms to this standard, the MANUFACTURER or installer should carry out such measures during manufacture or installation assembly as to ensure that each item satisfies all requirements even if it is not completely tested individually during manufacture or installation.

Such measures could take the form of:

a) production methods (to ensure good manufacturing output and constant quality) where such quality would be related to safety;

b) production tests (routine tests) performed on every produced item;

c) production tests performed on a production sample where results would justify a sufficient confidence level.

Production tests need not be identical with TYPE TESTS, but can be adapted to manufacturing conditions and possibly invoking less RISK for the quality of the insulation or other characteristics important for BASIC SAFETY and ESSENTIAL PERFORMANCE.

Production tests would, of course, be restricted to settings (possibly derived from TYPE TESTS) that would provoke the worst case situation.

Depending upon the nature of ME EQUIPMENT, production methods or tests could concern critical insulation of the MAINS PART, of the PATIENT CONNECTIONS and the insulation or the separation between these parts.

Suggested test parameters could be LEAKAGE CURRENT and dielectric strength.

When applicable, the continuity of protective earthing can be a major test parameter.

Guidance on general testing procedures that can be used with this standard is given in IEC/TR 62354 [66].

This standard uses several terms to describe fault conditions that could be encountered. They are:

SINGLE FAULT CONDITION

The SINGLE FAULT CONDITION is defined in 3.116 to describe those conditions where "a single means for reducing a RISK is defective" or "a single abnormal condition is present". Possible SINGLE FAULT CONDITIONS are listed in this standard and can affect verifiable values like CREEPAGE DISTANCES, protective earth path impedances, LEAKAGE CURRENTS, etc.

Faults not leading to a SINGLE FAULT CONDITION

Compared with SINGLE FAULT CONDITIONS, this standard does not have verifiable requirements for faults not leading to a SINGLE FAULT CONDITION. This means this standard does not give guidance how reliable it is that faults can be prevented.

Copyright International Electrotechnical Commission
Provided by IHS Markit under license with IEC
No reproduction or networking permitted without license from IHS Not for Resale, 08/26/2020 19:12:41 MDT

Combination of simultaneous independent faults

Because there are no reliable verifiable requirements defined in this standard for the prevention of faults, all possible simultaneous faults should be considered in accordance with 4.7.

Where a SINGLE FAULT CONDITION remains undetected (e.g. bridging of one MEANS OF OPERATOR PROTECTION), further simultaneous faults should be considered in accordance with 4.7.

NOTE For additional guidance, see IEC 60513:1994.

The worst cases of simultaneous faults are those which lead to most dangerous results. The wording of the standard is used to avoid conducting all possible simultaneous fault tests, because many of them could be covered by worst case testing.

Subclause 5.2 – Number of samples

The TYPE TEST sample or samples need to be representative of the units intended for the RESPONSIBLE ORGANIZATION.

Subclause 5.7 – Humidity preconditioning treatment

According to IEC 60529, the ENCLOSURE of ME EQUIPMENT that is RATED IPX8 prevents, under stated conditions, the entry of an amount of water where its presence could result in a HAZARD.

The test condition as well as the acceptable amount and location of water are to be defined in particular standards. If no ingress of water is tolerated (sealed ENCLOSURES) the application of the humidity preconditioning treatment is inappropriate.

Parts sensitive to humidity, normally used in controlled environments and which do not influence BASIC SAFETY and ESSENTIAL PERFORMANCE, need not be subjected to this test. Examples are: high-density storage media in computer-based systems, disc and tape drives, etc.

To prevent condensation when ME EQUIPMENT is placed in the humidity cabinet, the temperature of such a cabinet should be equal to or slightly lower than the temperature of the ME EQUIPMENT when it is introduced. To avoid the need for a temperature stabilization system for the air in the room outside the cabinet, the cabinet air temperature during the treatment is adapted to that of the outside air within the limits of the range of +20 °C to +32 °C and then "stabilized" at the initial value. Although the effect of the cabinet temperature on the degree of absorption of humidity is recognized, it is felt that the reproducibility of test results is not impaired substantially and the cost-reducing effect is considerable.

Subclause 5.9 – Determination of APPLIED PARTS and ACCESSIBLE PARTS

Except in special cases, such as PATIENT supports and waterbeds, contact with ME EQUIPMENT is supposed to be made with:

– one hand, simulated for LEAKAGE CURRENT measurements by a metal foil of 10 cm x 20 cm (or less if the total ME EQUIPMENT is smaller);

– one finger, straight or bent in a natural position, simulated by a test finger provided with a stop plate;

– an edge or slit that can be pulled outwards allowing subsequent entry of a finger, simulated by a combination of test hook and test finger.

Subclause 5.9.2.1 – Test finger

An ACCESS COVER is a part of the ENCLOSURE that can be removed in order to allow access to parts of electrical equipment for purposes of adjustment, inspection, replacement or repair. It is presumed that parts that can be removed without the use of a TOOL are intended to be replaced by any OPERATOR, not only by SERVICE PERSONNEL, even if this is not described in the

Copyright International Electrotechnical Commission
Provided by IHS Markit under license with IEC
No reproduction or networking permitted without license from IHS Not for Resale, 08/26/2020 19:12:41 MDT

instructions for use. OPERATORS other than SERVICE PERSONNEL might not be as well trained or experienced in good safety practices as SERVICE PERSONNEL. Therefore, extra safety precautions are needed to prevent accidental contact with hazardous voltages. That is why parts such as lamps, fuses, and fuseholders that can be removed without the use of a TOOL are to be removed before determining which parts inside the ACCESS COVER are to be considered ACCESSIBLE PARTS.

Fuseholders where the fuselink is held in a cap that can be removed without use of a TOOL are a special concern. If the fuselink does not come out when the cap is removed, the OPERATOR could be inclined to try to remove it by gripping the end of the fuselink with the fingers. The OPERATOR could try to insert a new fuselink into the fuseholder without first inserting it in the cap. Both cases can be considered reasonably foreseeable misuse. This should be taken intoconsideration with assessing what parts are accessible.

The reader is referred to IEC 60127-6 [7] for more information on fuseholders.

Clause 6 – Classification of ME EQUIPMENT and ME SYSTEMS

ME EQUIPMENT can have a multiple classification.

Subclause 6.2 – Protection against electric shock

The term “Class III equipment” is used in some other standards to identify equipment that is powered from a safety extra-low voltage (SELV) mains supply system. The term Class III equipment is not formally used in this standard. The BASIC SAFETY of Class III equipment is critically dependent on the installation and on other Class III equipment connected thereto. These factors are outside the control of the OPERATOR and this is considered to be unacceptable for ME EQUIPMENT. Additionally, limitation of voltage is not sufficient to ensure safety of the PATIENT. For these reasons, this standard does not recognize Class III construction.

Subclause 6.6 – Mode of operation

CONTINUOUS OPERATION and non-CONTINUOUS OPERATION cover the range of operating modes of virtually all equipment. ME EQUIPMENT that remains plugged into the SUPPLY MAINS continuously but is operated intermittently should be RATED for non-CONTINUOUS OPERATION, have the appropriate indication of on/off times in the ACCOMPANYING DOCUMENTS and markings on the ME EQUIPMENT (see 7.2.11).

Subclause 7.1.1 – USABILITY of the identification, marking and documents

For ME EQUIPMENT to be well designed, its markings and ACCOMPANYING DOCUMENTS should be clear, consistent, and help to reduce potential use error. Thus, markings and ACCOMPANYING DOCUMENTS should undergo the same rigorous evaluation as other OPERATOR-ME EQUIPMENT interface elements.

Subclause 7.1.2 – Legibility of markings

Markings on ME EQUIPMENT are expected to be CLEARLY LEGIBLE by an OPERATOR over the range of normal illumination levels where the ME EQUIPMENT is typically operated. The levels used in this test are derived from the following recommended illumination levels for use in interior lighting design [51]:

– 100 lx to 200 lx is recommended for working spaces where visual tasks are performed only occasionally;

– 500 lx to 1000 lx is recommended for visual tasks of small size or reading medium-pencil handwriting;

– 1 000 lx to 2 000 lx is recommended for visual tasks of low contrast or very small size: e.g. reading handwriting in hard-pencil on poor-quality paper.

Copyright International Electrotechnical Commission
Provided by IHS Markit under license with IEC
No reproduction or networking permitted without license from IHS Not for Resale, 08/26/2020 19:12:41 MDT

If markings are not legible to the OPERATOR under the expected conditions of use, there would be an unacceptable RISK.

The Minimum Angle of Resolution (MAR) is a visual acuity measurement method developed as an improvement on the long-used Snellen scale. The values are express as a logarithm of the Minimum Angle of Resolution. Log MAR can be calculated from the Snellen scale, i.e. log MAR = log(6/6) = 0 for normal vision.

The Jaeger test card is used for determining near vision. N6 corresponds to reading at a distance of 0,87 m from the face.

An ambient light level of 500 lx is recommended for conducting the visual acuity examination.

If a recommended minimum font size is to be considered, then a readable font size is a function of reading distance and the resulting visual angle of the marking image presented to the retina of the eye. Calculations of visual angle in minutes of arc are found in ANSI/AAMI HE-75:2009 [71], subclause 6.2.2.6.5, Table 6.2. Using a minimal acceptable visual angle of 12 minutes of arc, a font size of 9 would be recommended for a reading distance of one meter and a font size of 6 for a typical reading distance of 0,7 m.

Subclause 7.1.3 – Durability of markings

The rubbing test is performed with distilled water, ethanol 96 % and isopropyl alcohol.

Ethanol 96% is defined in the European Pharmacopoeia as a reagent in the following terms: C_2H_6O (MW46.07).

Isopropyl alcohol is defined in the European Pharmacopoeia as a reagent in the following terms: C_3H_8O (MW60.1).

Subclause 7.2.2 – Identification

This subclause is intended to apply to any detachable component when misidentification could result in a HAZARDOUS SITUATION. For examples, normal consumables would probably need to be identified, but a cosmetic cover would not need to be identified.

Although a MODEL OR TYPE REFERENCE usually denotes a certain performance specification, it might not denote the exact construction, including the applied components and materials. The MODEL OR TYPE REFERENCE is supplemented by a serial number or lot or batch identifier. The serial number or lot or batch identifier can be used for other purposes such as providing traceability in case the MANUFACTURER needs to take a corrective action.

It is characteristic of software that different versions can run on a PEMS. The identification of the software will often be on the user interface, although this might not be possible e.g. where the software does not have a user interface. Identification of the software could need special tools. For this reason, the requirement permits the identification to be only available to designated people.

Subclause 7.2.3 – Consult ACCOMPANYING DOCUMENTS

During the RISK MANAGEMENT PROCESS of a ME EQUIPMENT, if the MANUFACTURER determines that reading information within the instructions for use is a mandatory action necessary to control a specific RISK to an acceptable level, then the SAFETY SIGN ISO 7010-M002 (2011-05) (see Table D.2, SAFETY SIGN 10) notifies the OPERATOR of that need. In other words, if the means for an OPERATOR to avoid a specific and unacceptable RISK is only reading (and understanding) the instructions for use, then the SAFETY SIGN is required. If the OPERATOR does not read (and understand) those instructions for use, the RISK CONTROL is ineffective and there is an unacceptable RISK.

The SAFETY SIGN ISO 7010-M002 should not be used for indicating that it is a mandatory action to read the instructions for use for the disclosure of RESIDUAL RISK.

Copyright International Electrotechnical Commission
Provided by IHS Markit under license with IEC
No reproduction or networking permitted without license from IHS Not for Resale, 08/26/2020 19:12:41 MDT

The MANUFACTURER should use the USABILITY ENGINEERING PROCESS to determine whether or not using SAFETY SIGN ISO 7010-M002 as an effective means to control RISK to an acceptable level. The SAFETY SIGN should be placed in a location that is visible from the intended position of the OPERATOR.

It is not intended in every case when the instructions for use contain warnings, that the ME EQUIPMENT be marked with ISO 7010-M002 (i.e. instructions for use are not used as the primary RISK CONTROL measure). Symbol ISO 7000-1641 (2004-01) (see Table D.1, symbol 11) is used to indicate that the instructions for use should be considered when operating the ME EQUIPMENT. The symbol should be placed in a location close to a control needing reference to the instructions for use. This symbol can also be used to identify the location where the instructions for use is stored.

Subclause 7.2.4 – ACCESSORIES

RESPONSIBLE ORGANIZATIONS and OPERATORS need to be able to identify ACCESSORIES in order to know which ones can be used without impairing BASIC SAFETY or ESSENTIAL PERFORMANCE. A MODEL OR TYPE REFERENCE alone is not sufficient, because different MANUFACTURERS might use the same number. The name marked on the ACCESSORY could be that of the ME EQUIPMENT MANUFACTURER or a different name.

Subclause 7.2.10 – APPLIED PARTS

According to the second edition of this standard, the marking could be either on the APPLIED PART itself or adjacent to the connection point. Neither location is satisfactory in all cases.

Where a conductor that is not separated from PATIENT CONNECTIONS extends up to the point inside ME EQUIPMENT where an isolation barrier exists, a TYPE BF or TYPE CF marking on the APPLIED PART itself could mislead the RESPONSIBLE ORGANIZATION or the OPERATOR into believing that isolation is built into the APPLIED PART itself. If, on the other hand, the classification depends on the particular APPLIED PART in use, a single marking on the connection point would be inaccurate and multiple marking would be confusing.

For DEFIBRILLATION-PROOF APPLIED PARTS, if protection against the effect of the discharge of a cardiac defibrillator is partly in the PATIENT cable, a warning to the OPERATOR is necessary because there can be non-obvious HAZARDOUS SITUATIONS if the wrong cable is used. These HAZARDOUS SITUATIONS can include decreasing the defibrillation energy delivered to the PATIENT, damage to the ME EQUIPMENT with consequent loss of ESSENTIAL PERFORMANCE, or electric shock to the OPERATOR or other persons.

Subclause 7.2.12 – Fuses

Examples of marking for fuses complying with IEC 60127-1 are:

– T 315L, 250V
– T 315mAL, 250V
– F 1,25H, 250V
– F 1,25AH, 250V

The operating speed can be marked by the letter or colour codes in IEC 60127-1, which are as follows:

– very quick acting: FF, or black
– quick acting: F, or red
– medium time lag: M, or yellow
– time lag: T, or blue
– long time lag: TT, or grey

Copyright International Electrotechnical Commission
Provided by IHS Markit under license with IEC
No reproduction or networking permitted without license from IHS Not for Resale, 08/26/2020 19:12:41 MDT

Subclause 7.2.21 – Mass of MOBILE ME EQUIPMENT

MOBILE ME EQUIPMENT is intended to be transported from one location to another by its own wheels or equivalent means. For safety, it is important that the OPERATOR be aware of the total mass of the ME EQUIPMENT with its SAFE WORKING LOAD installed. This is important when moving the ME EQUIPMENT, and, for heavy ME EQUIPMENT, understanding any limitations on locations where the ME EQUIPMENT can be taken. The ME EQUIPMENT can have bins, shelves or drawers that might have their own maximum loading requirements. The marking on the ME EQUIPMENT needs to be sufficiently separate and distinct from any markings on the bins, shelves or draws to avoid confusing the OPERATOR as to what the marking applies.

Subclause 7.3.2 – HIGH VOLTAGE parts

HIGH VOLTAGE parts present a significant electric shock HAZARD to SERVICE PERSONNEL and others who could be required to work inside the ME EQUIPMENT while it is energized. Because the parts are inside the ENCLOSURE, the RISK is perceived to be substantially less than that for HIGH VOTAGE TERMINAL DEVICES located on the outside of the ME EQUIPMENT. Therefore, the "dangerous voltage" symbol (IEC 60417-5036) (2002-10) (see Table D.1, symbol 24) is permitted as a marking to alert SERVICE PERSONNEL and others to the potential presence of these dangerous voltages. The MANUFACTURER is permitted to use ISO 7010-W012 (see Table D.2. SAFETY SIGN 3). The RISK MANAGEMENT PROCESS could determine that the SAFETY SIGN is the most appropriate choice if the personnel exposed to the HAZARD have minimal training or might otherwise be unaware that HIGH VOLTAGE is present.

Subclause 7.3.4 – Fuses, THERMAL CUT-OUTS and OVER-CURRENT RELEASES

See the rationale for 7.2.12.

Subclause 7.3.5 – PROTECTIVE EARTH TERMINALS

This standard does not require marking of terminals for internal PROTECTIVE EARTH CONNECTIONS, but does not preclude it.

Subclause 7.4.1 – Power switches

If a marking is used for a toggle-type switch, the symbols for "on" ( ) and "off" ( ) [symbols 12 and 13 from Table D.1] should be used to indicate its ON and OFF positions.

For a push-button type switch, the appropriate marking will depend on the type of switch. For a push button switch with bistable positions, the symbol ( ) [symbol 14 from Table D.1] should be used to indicate that both the ON and OFF positions are stable.

For a push button switch with a momentary ON position, the symbol (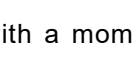) [symbol 15 from Table D.1] should be used to indicate that mains power is applied for only as long as the push button is depressed. As soon as the button is released the switch returns to the stable OFF position.

Subclause 7.4.2 – Control devices

The different positions of switches that control the functionality of the ME EQUIPMENT or a part of the ME EQUIPMENT, but do not control mains power to the ME EQUIPMENT or a part of the ME EQUIPMENT should also be marked in such a way as to clearly indicate the state of the control function. Any appropriate means including figures, letters, indicator lights, etc. can be used. If the marking includes symbols, the symbols for "on" for part of the equipment ( ) and "off" for part of the equipment ( ) [symbols 16 and 17 from Table D.1] can be used to indicate its ON and OFF positions.

Copyright International Electrotechnical Commission
Provided by IHS Markit under license with IEC
No reproduction or networking permitted without license from IHS Not for Resale, 08/26/2020 19:12:41 MDT

A switch or switch position by means of which the ME EQUIPMENT or part of the ME EQUIPMENT is switched on in order to bring it into the "stand-by" condition can be indicated by the stand-by symbol ( ) [symbol 29 from Table D.1]. This symbol is required by IEC 60950-1:2005 to indicate the stand-by mode of the information technology equipment covered by that standard.

Subclause 7.8 – Indicator lights and controls

For colours of indicator lights see also IEC 60073 [5].

Colour alone should not be used to convey important information. A redundant means of conveying information such as shape, location, sound or marking is recommended.

INFORMATION SIGNALS, such as a waveform or a parameter numeric, are allowed to use any colour, including red, yellow, cyan, and green, as long as they are correctly perceived as different from HIGH, MEDIUM and LOW PRIORITY alarm indicator lights and as different from red, yellow, and green indicator lights.

Subclause 7.8.1 – Colour of indicator lights

It is important to distinguish HIGH PRIORITY, MEDIUM PRIORITY and LOW PRIORITY ALARM SIGNALS from the warning and caution signals. A warning signal, a steady (constant, non-flashing) red light, and the caution signal, a steady (constant, non-flashing) yellow light, are to be used for conditions that are present in NORMAL USE. The warning signal alerts the OPERATOR to a HAZARDOUS SITUATION that can cause death or serious injury. The caution signal alerts the OPERATOR to a HAZARDOUS SITUATION that can cause minor or moderate injury or ME EQUIPMENT damage. Thus, these signals are akin to SAFETY SIGNS or markings that indicate warnings and cautions at all times. Typically, these indicator lights would be accompanied by natural language that explains the HAZARD or a HAZARDOUS SITUATION. An example might be a warning or caution light to signify a hot surface that should not be touched, or the danger of opening a door and risking exposure to radiation. In these examples, the hot surface and the radiation are expected to be present during NORMAL USE. Warning and caution lights do not require OPERATOR action (as a HIGH PRIORITY or MEDIUM PRIORITY ALARM SIGNAL requires), and they do not require a change in workflow; they merely require awareness. Furthermore, warning and caution lights are considered INFORMATION SIGNALS and are not accompanied by ALARM SIGNALS.

On the other hand, HIGH PRIORITY ALARM SIGNALS can include an alarm indicator light (a flashing red light as opposed to a steady red light) and can be accompanied by an appropriate auditory ALARM SIGNAL. Similarly, a MEDIUM PRIORITY ALARM SIGNAL can include an alarm indicator light (a flashing yellow light as opposed to a steady yellow light) and can be accompanied by an appropriate auditory ALARM SIGNAL. In either case, OPERATOR action and changes in workflow are required.

Subclause 7.9.1 – General

It is important that ME EQUIPMENT or an ME SYSTEM is not unintentionally used in an application for which it is not intended by its MANUFACTURER.

The USABILITY ENGINEERING PROCESS requires the MANUFACTURER to develop an applications specification that includes the intended environments of use. The MANUFACTURER is required to supply a summary of this specification in the ACCOMPANYING DOCUMENTS. See 12.2.

Subclause 7.9.2.1 – General

RESPONSIBLE ORGANIZATIONS and OPERATORS frequently deal with many different types of ME EQUIPMENT. Because of the complexity of modern ME EQUIPMENT, the instructions for use are an important part of the ME EQUIPMENT. Some commonality in the structure for the instructions for use could help OPERATORS to find needed material quickly and easily. However, because of the diversity of ME EQUIPMENT covered by this standard, no one format will be equally applicable to all ME EQUIPMENT.

--`,,```,,,,````-`-`,,`,,`,`,,`---

Copyright International Electrotechnical Commission
Provided by IHS Markit under license with IEC
No reproduction or networking permitted without license from IHS Not for Resale, 08/26/2020 19:12:41 MDT

When considering if the PATIENT can act as an OPERATOR, the MANUFACTURER needs to take into account that the level of protection provided by this standard for the OPERATOR can be different from that for the PATIENT. For example, acceptable LEAKAGE CURRENT levels and accessible voltages values are higher for the OPERATOR than they are for the PATIENT. Instead of PATIENT LEAKAGE CURRENT, TOUCH CURRENT could be applied. Additionally the OPERATOR can have access to voltages up to 42,4 V peak a.c. or 60 V d.c.

Other conditions to consider include:

– Is the ME EQUIPMENT to be used under medical supervision or guidance?
– What is the health condition of the PATIENT?
– What treatment is being provided to the PATIENT?
– Are there special USABILITY considerations (see IEC 60601-1-6)?
– Is the ME EQUIPMENT to be used in the professional healthcare environment, the home healthcare environment (see IEC 60601-1-11 [55]) or the emergency medical service environment (see IEC 60601-1-12 [58])?
– Does the PATIENT have access to the instructions for use?
– Is adequate training of the PATIENT as an OPERATOR available?

The problem of languages used in markings and in ACCOMPANYING DOCUMENTS cannot be solved by IEC. Even a requirement that identifications and ACCOMPANYING DOCUMENTS have to be in the national languages cannot be upheld world-wide.

Subclause 7.9.2.2 – Warning and safety notices

For CLASS I ME EQUIPMENT, where operation from either a SUPPLY MAINS or an INTERNAL ELECTRICAL POWER SOURCE is specified, the instructions for use should state that the INTERNAL ELECTRICAL POWER SOURCE is to be used if the integrity of the PROTECTIVE EARTH CONDUCTOR or the protective earthing system in the installation is in doubt.

Subclause 7.9.2.6 – Installation

The instructions for use can contain a statement saying that the MANUFACTURER, assembler, installer or importer considers himself responsible for the effect on BASIC SAFETY, reliability and performance of the ME EQUIPMENT or ME SYSTEM only if:

– appropriately trained personnel carry out assembly operations, extensions, readjustments, modifications or repairs;
– the electrical installation of the relevant room complies with the appropriate requirements; and
– the ME EQUIPMENT or ME SYSTEM is used in accordance with the instructions for use.

Subclause 7.9.2.7 – Isolation from the SUPPLY MAINS

A plug and socket provide suitable means for isolation from the SUPPLY MAINS to satisfy 8.11.1 a), but they would not be suitable if they were not readily accessible when needed.

Subclause 7.9.2.19 – Unique version identifier

MANUFACTURERS frequently issue multiple revisions of the instructions for use. RESPONSIBLE ORGANIZATIONS and OPERATORS need to be able to determine if the instructions for use they have are current. This is particularly important when dealing with PEMS software that can be updated in the environment of use. Providing a date of issuance is a widely accepted method for identifying versions of a document. The MANUFACTURER decides what level of detail is appropriate with month and year being common for printed material. However, greater granularity might be required, particularly for material distributed electronically. The MANUFACTURER could include a revision number when appropriate.

--`,,```,,,,````-`-`,,`,,`,`,,`---

Copyright International Electrotechnical Commission
Provided by IHS Markit under license with IEC
No reproduction or networking permitted without license from IHS Not for Resale, 08/26/2020 19:12:41 MDT

Subclause 7.9.3.1 – General

According to the INTENDED USE of ME EQUIPMENT, the MANUFACTURER should specify the permissible environmental conditions for which a HAZARD is not induced. Environmental conditions such as the following are expected to be considered:

– the effect of humidity;
– the effect of temperature;
– the effect of atmospheric pressure;
– the effect of shock and vibration;
– the effect of ultra-violet radiation.
– the effect of the temperature of the water for water cooled ME EQUIPMENT;
– the effect of pollution.

Accuracy and precision are not possible to define in this standard. These concepts have to be addressed in particular standards.

The values listed below were used in the second edition of IEC 60601-1 to describe the range of environmental conditions over which ME EQUIPMENT was required to be safe.

a) an ambient temperature range of + 10 °C to + 40 °C;

b) a relative humidity range of 30 % to 75 %;

c) an atmospheric pressure range of 70,0 kPa to 106,0 kPa;

d) a temperature of the water at the inlet of water-cooled ME EQUIPMENT not higher than 25 °C.

These environmental conditions were based on the conditions in buildings without air-conditioning in climates where the ambient temperature occasionally reaches + 40 °C.

In the second edition of IEC 60601-1, the ME EQUIPMENT had to be safe when operated under the above conditions but it only needed to be fully operable under conditions specified by the MANUFACTURER in the ACCOMPANYING DOCUMENTS.

This edition specifies particular environmental conditions for some requirements and tests. Where this is not the case, ME EQUIPMENT has to remain safe and operate correctly over the range of environmental conditions specified by the MANUFACTURER in the ACCOMPANYING DOCUMENTS.

Attention is drawn to the fact that there was always a problem to apply a 40 °C environmental condition to a ME EQUIPMENT in cases where the APPLIED PART needed to operate at temperatures close to the 41 °C limit.

The second edition of IEC 60601-1 specified the following range of environmental conditions for transport and storage of ME EQUIPMENT unless otherwise specified by the MANUFACTURER:

– an ambient temperature range of - 40 °C to + 70 °C;
– a relative humidity range of 10 % to 100 %, including condensation;
– an atmospheric pressure range of 50 kPa to 106 kPa.

Amendment 2 to the second edition replaced the above list with a requirement that the MANUFACTURER state the permissible transport and storage conditions. However, in the absence of other information, the above list can serve as a useful starting point in determining the permissible limits.

Information on environmental parameters and a limited number of their severities within the range of conditions met by electrotechnical products when being transported, stored, installed and used can be found in the IEC 60721 series [18].

Copyright International Electrotechnical Commission
Provided by IHS Markit under license with IEC
No reproduction or networking permitted without license from IHS Not for Resale, 08/26/2020 19:12:41 MDT

For PERMANENTLY INSTALLED high power ME EQUIPMENT, it might be necessary to control the voltage drop in the customer installation to prevent input voltage getting below the minimum normal voltage due to local conditions. Control can be done by specifying the required apparent impedance of the SUPPLY MAINS.

Subclause 7.9.3.4 – Mains isolation

SERVICE PERSONNEL need to know how to isolate the ME EQUIPMENT from the SUPPLY MAINS. This is not always obvious, particularly if there is a switch in the MAINS PART that does not meet the requirements of 8.11.

Clause 8 – Protection against electrical HAZARDS from ME EQUIPMENT

The fundamental principle for protection against electric shock is that the voltage or current between any accessible surface and any other accessible surface or earth is low enough not to result in a HAZARDOUS SITUATION, in all relevant circumstances including NORMAL CONDITION and SINGLE FAULT CONDITION.

Requirements for achieving protection have been formulated in various ways in IEC basic safety standards, in previous editions of this standard, and in other IEC product standards.

In order for the fundamental principle to be satisfied:

a) parts that are “live” (as defined in the second edition of this standard) or “hazardous live” (as defined in some other standards, such as IEC 61140 [23] and IEC 61010-1 [22]) have to be inaccessible (but see below regarding problems in identifying what is “live”) and

b) ACCESSIBLE PARTS and APPLIED PARTS have to be not “live” / “hazardous live.”

NOTE The term “live” was defined in the second edition of this standard as, “State of a part which, when connection is made to that part, can cause a current exceeding the allowable LEAKAGE CURRENT (specified in Subclause 19.3) for the part concerned to flow from that part to earth or from that part to an ACCESSIBLE PART of the same EQUIPMENT.

These two requirements are in principle equivalent but some standards state both of them.

These requirements in turn imply that:

c) ACCESSIBLE PARTS and APPLIED PARTS have to be separated from certain internal live parts: in general two separate MEANS OF PROTECTION are necessary, one to provide separation in NORMAL CONDITION and a second to maintain BASIC SAFETY in SINGLE FAULT CONDITION, and

d) LEAKAGE CURRENTS (and possibly also voltages and energies) have to be below acceptable limits.

Most standards include explicit requirements covering each of these aspects of providing protection. For example the first and second editions of this standard dealt with a) in Clause 16, with b) and d) in Clause 19 and with c) in Clauses 17, 18 and 20.

Requirement a) has typically been formulated as a requirement for the provision of ENCLOSURES or barriers to prevent contact with internal hazardous live parts. However it can alternatively be formulated in terms of the determination of which parts are accessible. Anyway the adequacy of ENCLOSURES or barriers is determined by use of the relevant test fingers and probes.

Application of the above approach to ME EQUIPMENT has presented some difficulties. The limits for voltage and current depend on how, if at all, the part(s) concerned can be connected to a PATIENT, e.g. directly to the heart, directly to other parts of the body, or indirectly via the OPERATOR. This has led to difficulties in identifying which parts are “live” parts.

The definition of “live” in the second edition of this standard refers to the allowable LEAKAGE CURRENT. The definition is therefore difficult to apply to internal parts for which no particular LEAKAGE CURRENT limits are specified.

Copyright International Electrotechnical Commission
Provided by IHS Markit under license with IEC
No reproduction or networking permitted without license from IHS Not for Resale, 08/26/2020 19:12:41 MDT

Certain parts could be regarded as “live” (within the definition of the second edition of this standard) for some purposes and at the same time as not “live” for other purposes. For example an internal part that can source a current of, say, 200 μA has to be separated from all ACCESSIBLE PARTS, including PATIENT CONNECTIONS in NORMAL CONDITION.

The separation from PATIENT CONNECTIONS of TYPE CF APPLIED PARTS has to remain effective in SINGLE FAULT CONDITION, because a current of 200 μA from these is not permissible. The same part can however become connected to other ACCESSIBLE PARTS and PATIENT CONNECTIONS in SINGLE FAULT CONDITION.

Thus two MEANS OF PROTECTION (DOUBLE INSULATION or REINFORCED INSULATION) would be needed between such a part and the PATIENT CONNECTIONS of TYPE CF APPLIED PARTS, but a single MEANS OF PROTECTION (such as BASIC INSULATION alone) would be acceptable between such a part and other ACCESSIBLE PART.

Furthermore, requirements that specify the necessary separation between parts that are accessible and parts that are “live” do not easily take account of parts that are not “live” but can become “live,” such as the parts of a floating circuit that become “live” when a connection is made to another part of the same circuit.

Consider, for example, the simple situation shown in Figure A.10.

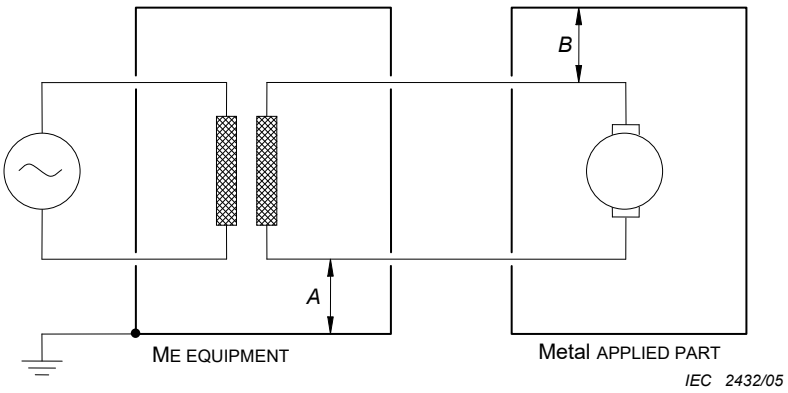

Figure A.10 – Floating circuit

The APPLIED PART has a metal ENCLOSURE that is not PROTECTIVELY EARTHED. If there is a direct connection at point A, then the other end of the SECONDARY CIRCUIT is “live,” and even the first edition of this standard would have required DOUBLE INSULATION or REINFORCED INSULATION at point B.

If, instead, there is a direct connection at point B, the first edition would have required only BASIC INSULATION at point A; but this was dealt with in the second edition by adding Subclause 20.2 B-e, which requires DOUBLE INSULATION or REINFORCED INSULATION at point A.

If however there is some insulation at both points A and B, then no part of the SECONDARY CIRCUIT is “live” according to the definition in the second edition, so the second edition of this standard specifies no requirements for that insulation, which can therefore be minimal. The German National Committee of the IEC discovered this problem in 1993, unfortunately just too late for it to be dealt with in the second (and final) amendment to the second edition of this standard. The approach adopted in this edition is intended to overcome this problem.

The formulation proposed for the third edition of this standard is to specify:

1) how to determine which parts are to be regarded as ACCESSIBLE PARTS (by inspection and where necessary by the use of appropriate test probes and fingers);
2) the permissible limits for voltage/current/energy in NORMAL CONDITION and relevant SINGLE FAULT CONDITIONS; these limits depend on the possible circumstances of connection to a PATIENT or to an OPERATOR;

Copyright International Electrotechnical Commission
Provided by IHS Markit under license with IEC
No reproduction or networking permitted without license from IHS Not for Resale, 08/26/2020 19:12:41 MDT

3) that NORMAL CONDITION includes short circuit of any insulation, AIR CLEARANCE or CREEPAGE DISTANCE or impedance which does not comply with specified requirements for the relevant WORKING VOLTAGE, and open circuit of any earth connection which does not comply with the requirements for PROTECTIVE EARTH CONNECTIONS; and

4) that SINGLE FAULT CONDITIONS include short circuit of any insulation, AIR CLEARANCE or CREEPAGE DISTANCE which does comply with specified requirements for the relevant WORKING VOLTAGE, short circuit of any relevant component, and open circuit of any earth connection which does comply with the requirements for PROTECTIVE EARTH CONNECTIONS.

This approach avoids the need to include explicit separate requirements for particular protective means, as specified in existing IEC standards. Arguably it could avoid even a general requirement for two MEANS OF PROTECTION, as presently specified, but the working group considered that such a requirement is desirable.

Where requirements from the second edition that used the defined term “live” have been retained, they have been re-phrased so as not to use this term.

Generally, protection is obtained by a combination of:

– limitation of voltage or energy, or protective earthing (see 8.4 and 8.6);

– enclosing or guarding of energized circuits (see 5.9);

– insulation of adequate quality and construction (see 8.5).

The dielectric strength requirements are included to check the quality of the insulation material used at different places in the ME EQUIPMENT.

Subclause 8.1 – Fundamental rule of protection against electric shock

Subclause 8.1 a)

Insulation not complying with 8.8, spacing less than specified in 8.9, etc. are not MEANS OF PROTECTION, but they could influence the voltages or LEAKAGE CURRENTS appearing on ACCESSIBLE PARTS and APPLIED PARTS. Measurements might therefore need to be made with such parts intact or bypassed, whichever is the worse case.

As there are in general no integrity requirements for signal connections, interruption of a functional earth connection has to be considered as a NORMAL CONDITION.

Subclause 8.1 b)

LEAKAGE CURRENTS are not generally measured in the SINGLE FAULT CONDITION of breakdown of BASIC INSULATION in CLASS I EQUIPMENT because either the LEAKAGE CURRENTS in this case flow only during the time before a fuse or OVER-CURRENT RELEASE operates or the use of an isolated power supply limits the LEAKAGE CURRENTS to safe values. Exceptionally, LEAKAGE CURRENTS are measured during short circuiting of BASIC INSULATION in cases where there are doubts concerning the effectiveness of PROTECTIVE EARTH CONNECTIONS inside the ME EQUIPMENT (see 8.6.4 b)).

In certain instances the short-circuit condition is not necessarily the worst case. As an example, an overvoltage device, intended to prevent damage to insulation, could fail in the open-circuit condition thereby no longer rendering its safety function. This could lead to damaged insulation. It is recognized that in most cases in this subclause, the open-circuit condition is superfluous but for select components it was acknowledged that the open-circuit condition is a valid failure mode. Components of ME EQUIPMENT are also addressed in 4.8.

With regard to the presence of the MAXIMUM MAINS VOLTAGE on an unearthed ACCESSIBLE PART and APPLIED PARTS, see the rationales for 8.5.2.2 and 8.7.4.7 d).

If ME EQUIPMENT were configured as shown in Figure A.11, interruption of the connection would result in excessive TOUCH CURRENT. This situation is therefore one of the SINGLE FAULT CONDITIONS that should be investigated.

Copyright International Electrotechnical Commission
Provided by IHS Markit under license with IEC
No reproduction or networking permitted without license from IHS Not for Resale, 08/26/2020 19:12:41 MDT

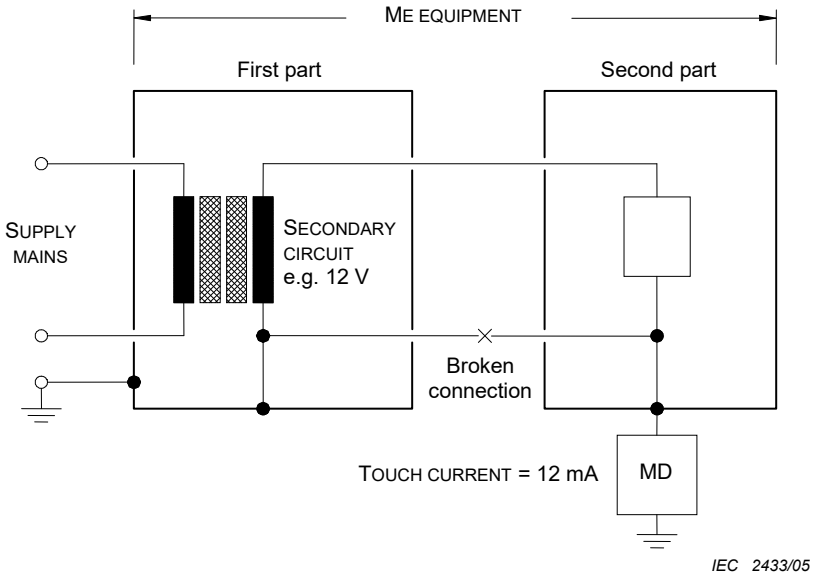

Figure A.11 – Interruption of a power-carrying conductor between ME EQUIPMENT parts in separate ENCLOSURES

Subclause 8.3 – Classification of APPLIED PARTS

Subclause 8.3 a)

ME EQUIPMENT intended for DIRECT CARDIAC APPLICATION having one or more TYPE CF APPLIED PARTS could have one or more additional TYPE B APPLIED PARTS or TYPE BF APPLIED PARTS that can be applied simultaneously (see also 7.2.10).

Similarly ME EQUIPMENT could have a mixture of TYPE B APPLIED PARTS and TYPE BF APPLIED PARTS.

Subclause 8.3 b)

Most particular standards developed for kinds of ME EQUIPMENT that have PATIENT electrodes require the APPLIED PARTS to be TYPE BF APPLIED PARTS or TYPE CF APPLIED PARTS. For similar kinds of ME EQUIPMENT for which no particular standards are available, it is better to include such a requirement in this standard than to allow such APPLIED PARTS to be TYPE B APPLIED PARTS. The TYPE B APPLIED PART classification is mainly used, in practice, for PATIENT supporting ME EQUIPMENT such as X-ray tables, not for PATIENT electrodes.

Subclause 8.4.1 – PATIENT CONNECTIONS intended to deliver current

This standard does not specify any limits for currents that are intended to produce a physiological effect in the PATIENT, but particular standards can do so. Any other currents flowing between PATIENT CONNECTIONS are subject to the specified limits for PATIENT AUXILIARY CURRENT.

Subclause 8.4.2 – ACCESSIBLE PARTS and APPLIED PARTS

Subclause 8.4.2 b)

It is presumed that TOUCH CURRENT can reach the PATIENT by chance contact through various paths, including a path via the OPERATOR. The limits for TOUCH CURRENT therefore apply to all ACCESSIBLE PARTS except PATIENT CONNECTIONS, which are covered by 8.4.2 a), and parts that satisfy the conditions specified in 8.4.2 c).

--`,,```,,,`,`,`,,,,,,,,,,`-`-`,,`,`,`,,`---

Copyright International Electrotechnical Commission
Provided by IHS Markit under license with IEC
No reproduction or networking permitted without license from IHS
Not for Resale, 08/26/2020 19:12:41 MDT

Subclause 8.4.2 c)

There is little or no justification for the difference in the second edition between the cases where there is a cover that is removable without a TOOL and where there is no cover. The limit values have been harmonized with IEC 60950-1:2005 because Information Technology (IT) equipment is commonly used in ME SYSTEMS, and the values in IEC 60950-1:2005 are not much different from those in the second edition of this standard. (60 V dc is the same, and 42,4 V peak is not much different from 25 V r.m.s.).

Essentially OPERATOR protection is now based on IEC 60950-1:2005 and, therefore, we need to incorporate the protection requirements from that standard. Previously IEC 60601-1 did not have a requirement for protection against hazardous energy but there is a definite RISK from burn, fire and flying debris. This is now addressed using the requirement from IEC 60950-1:2005. The limit values have been established for many years in IEC 60950-1 and its predecessor standards. The maximum available energy is allowed to exceed 240 VA during the first 60 s after contact with the ACCESSIBLE PART (e.g. it takes time for the current limit circuit in a power supply to operate and during this time the hazardous energy level can be exceeded).

Subclause 8.4.2 d)

As well as parts that are determined to be ACCESSIBLE PARTS in accordance with 5.9, electrical contact with internal parts is supposed to be made with:

– a pencil or pen, held in a hand, simulated by a guided test pin;
– a necklace or similar pendant, simulated by a metal rod suspended over openings in a top cover;
– a screwdriver for adjustment of a preset control by the OPERATOR, simulated by an inserted metal rod.

Subclause 8.4.3 – ME EQUIPMENT intended to be connected to a power source by a plug

The 45 μC limit is the same as that specified in IEC 60335-1, which is based on the limits in IEC 60479-1 [73]. It is comparable (though not exactly equivalent) to the 100 nF limit specified in the second edition of this standard. With regard to BASIC SAFETY there is no reason to specify a more stringent limit between the line and earth pins, as in the second edition.

Subclause 8.4.4 – Internal capacitive circuits

The limit has been changed from the 2 mJ specified in the second edition of this standard to the same value as specified in the previous subclause, because whatever is safe for an OPERATOR, or even a PATIENT, who touches the pins of a MAINS PLUG is also safe for someone who opens an ACCESS COVER to gain access to the inside of ME EQUIPMENT.

Subclause 8.5.1 – MEANS OF PROTECTION

Two MEANS OF PROTECTION can be provided in several ways. The following are examples:

1) PATIENT CONNECTIONS and other ACCESSIBLE PARTS are separated from parts different from earth potential by BASIC INSULATION only, but PROTECTIVELY EARTHED and have such a low internal impedance to earth that LEAKAGE CURRENTS do not exceed the allowable values in NORMAL CONDITION and SINGLE FAULT CONDITION.
2) PATIENT CONNECTIONS and other ACCESSIBLE PARTS are separated from parts different from earth potential by BASIC INSULATION and an intermediate PROTECTIVELY EARTHED metal part, which could be a fully enclosing metal screen.
3) PATIENT CONNECTIONS and other ACCESSIBLE PARTS are separated from parts different from earth potential by DOUBLE or REINFORCED INSULATION.
4) Impedances of components prevent the flow to PATIENT CONNECTIONS and other ACCESSIBLE PARTS of LEAKAGE CURRENTS and PATIENT AUXILIARY CURRENTS exceeding the allowable values.

A survey of insulation paths is found in Annex J.

Copyright International Electrotechnical Commission
Provided by IHS Markit under license with IEC
No reproduction or networking permitted without license from IHS
Not for Resale, 08/26/2020 19:12:41 MDT

Previous editions of this standard also recognized the possibility of achieving separation by use of a PROTECTIVELY EARTHED intermediate circuit. However it is in general not possible for the whole of a circuit to be connected with very low impedance to the PROTECTIVE EARTH TERMINAL. Also, if one part of a circuit is earthed, other parts of the circuit are then different from earth potential, so have to be further separated from PATIENT CONNECTIONS and other ACCESSIBLE PARTS.

Air can form part or all of the BASIC INSULATION or SUPPLEMENTARY INSULATION.

In general DOUBLE INSULATION is preferable to REINFORCED INSULATION.

The first edition of this standard specified numerous pairs of parts between which separation was required, but the list was incomplete. It was expanded in the second edition but still remained incomplete, for example with regard to the situation illustrated in Figure A.10.

Discussion in the working group at an early stage of the development of this edition established that test houses actually have to identify the various circuits inside ME EQUIPMENT and the various points at which separation could be needed. This edition therefore specifies this PROCEDURE explicitly.

The distinction between MEANS OF OPERATOR PROTECTION and MEANS OF PATIENT PROTECTION was introduced in response to concerns that the requirements of previous editions of this standard for insulation testing, CREEPAGE DISTANCES and AIR CLEARANCES were too stringent.

Many ME SYSTEMS incorporate equipment complying with IEC 60950-1. Also many kinds of ME EQUIPMENT incorporate parts, such as power supplies, that have been primarily designed for use in equipment complying with IEC 60950-1. This led some experts and National Committees to propose that the requirements of this standard be harmonized with IEC 60950-1 as far as possible.

However the test voltages and the minimum values of CREEPAGE DISTANCES and AIR CLEARANCES specified in IEC 60950-1:2005, IEC 60950-1:2005/AMD1:2009 and IEC 60950-1:2005/AMD2:2013 are derived from IEC 60664-1 and are based on assumptions about possible overvoltages in mains and other circuits, particularly the frequency of occurrence of various levels of overvoltage. According to the understanding of the working group experts who revised the corresponding requirements of this standard, compliance with the requirements of IEC 60664-1 or IEC 60950-1 leaves a RISK that transient insulation breakdown could occur with a frequency up to about once per year.

The probability of occurrence of an OPERATOR coming in contact with a relevant part and with earth at the moment when breakdown occurs is low, so the RESIDUAL RISK is acceptable for ME EQUIPMENT, just as it is for IT equipment. However the probability of occurrence of a PATIENT being in contact with an APPLIED PART and with earth is significantly higher. The working group therefore decided that a larger margin of safety should be applied where PATIENT safety is concerned. However there was no reliable basis for deciding what additional margin might be applied to the values from IEC 60664-1, so the same values that were specified in the second edition of this standard have been retained for MEANS OF PATIENT PROTECTION.

For MEANS OF OPERATOR PROTECTION this revision of the standard allows the MANUFACTURER three options (see Figure 40). One option is to apply the requirements of IEC 60950-1 and to identify the appropriate installation category and pollution degree. Alternatively, the MANUFACTURER can apply the values in the tables, which have been derived from IEC 60950-1 on the basis of reasonable assumptions about the installation category and pollution degree. The third option is to treat the MEANS OF OPERATOR PROTECTION as if it were a MEANS OF PATIENT PROTECTION.

Amendment 2 has expanded the options for MEANS OF OPERATOR PROTECTION to include the application of the requirements of IEC 62368-1:2018, which is replacing IEC 60950-1.

Based on a detailed review of the difference in the requirements of IEC 62368-1:2018, IEC 60950-1:2005, IEC 60950-1:2005/AMD1:2009 and IEC 60950-1:2005/AMD2:2013 and

Copyright International Electrotechnical Commission
Provided by IHS Markit under license with IEC
No reproduction or networking permitted without license from IHS Not for Resale, 08/26/2020 19:12:41 MDT

this document, it was determined that for MOOP IEC 62368-1:2018 can be used directly as an alternative to IEC 60950-1:2005, IEC 60950-1:2005/AMD1:2009 and IEC 60950-1:2005/AMD2:2013. There are limitations identified where necessary within the normative text to clarify differences between this standard and IEC 62368-1:2018 when barriers providing 2 MOOP are additionally relied on to provide 1 MOPP.

During the review process, it was determined that there are two typical scenarios for how equipment complying with IEC 62368-1:2018 might be incorporated into ME EQUIPMENT. These scenarios are described below in Table A.6. See also Clause 16 for information on the use of equipment complying with IEC 62368-1:2018 as part of an ME SYSTEMS.

Table A.6 – Typical scenarios for the use of equipment complying with IEC 62368-1:2018 in ME EQUIPMENT

Scenario	Description	Examples
1	Sub-assemblies/components complying with IEC 62368-1:2018 are built into ME EQUIPMENT. In this scenario, sub-assemblies/components complying with IEC 62368-1:2018 are fully contained within the ENCLOSURE of the ME EQUIPMENT and are accessible only with the use of a tool (the output parts of the power supply or AC-DC connectors can be accessible at SIP/SOP connections without the use of a tool). Sub-assemblies/component complying with IEC 62368-1:2018 are generally considered as a sub-assembly/component of the ME EQUIPMENT and they cannot be used separately.	Internal power supplies, optical disc drives, transformers, processor circuit board assemblies, DC-DC converters, AC-DC converters, Bluetooth communication modules
2	Equipment/sub-assemblies complying with IEC 62368-1:2018 are provided as a part of ME EQUIPMENT, but are not built into the ME EQUIPMENT and are readily accessible to the OPERATOR and/or PATIENT. Equipment/sub-assemblies complying with IEC 62368-1:2018 are provided with their own ENCLOSURE and can be used separately from the ME EQUIPMENT.	External/Stand-alone power supplies, computers, monitors, printers, keyboards
NOTE See Figure A.24 and Figure A.25 for pictorial representations of Scenarios 1 and 2.		

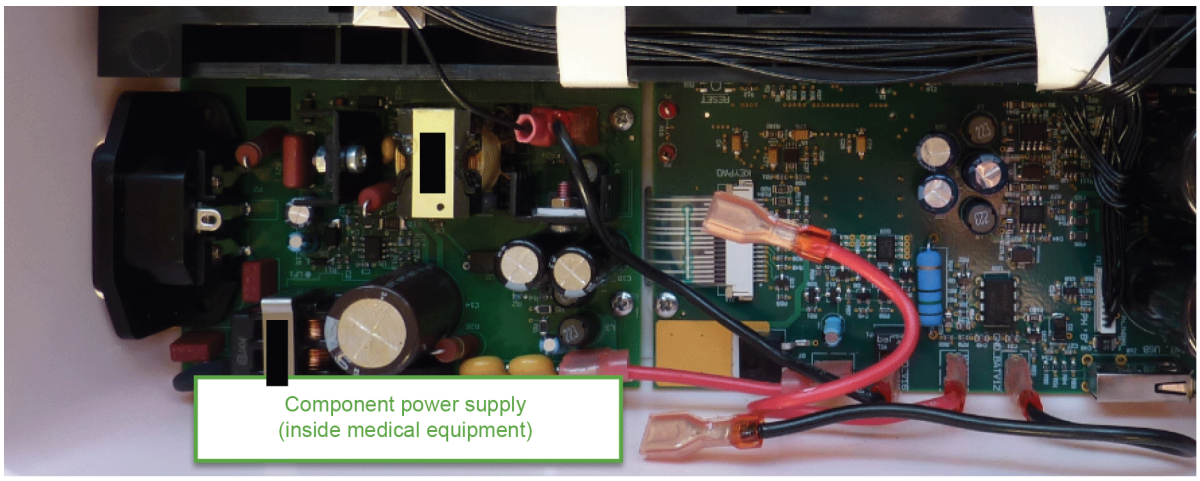

IEC

Figure A.24 – Example of Scenario 1

Copyright International Electrotechnical Commission
Provided by IHS Markit under license with IEC
No reproduction or networking permitted without license from IHS
Not for Resale, 08/26/2020 19:12:41 MDT

IEC

Figure A.25 – Example of Scenario 2

The analysis focused on these scenarios. The purpose was to determine if any differences in the application of requirements of IEC 62368-1:2018 would be necessary based on the use scenario.

Where IEC 62368-1:2018 has been identified as an acceptable alternative to the requirements of this standard or IEC 60950-1:2005, IEC 60950-1:2005/AMD1:2009 and IEC 60950-1:2005/AMD2:2013, no additional rationale has been written.

During the review process, some differences in terminology were identified between this standard and IEC 62368-1:2018. Specifically, the definitions for TOUCH CURRENT and PEAK WORKING VOLTAGE were reviewed; while differences were noted, it was determined that these differences did not have any technical effect on the use of IEC 62368-1:2018 as identified in the body of this document.

Y capacitors are used to reduce radio frequency interference by providing a low impedance path to earth for high frequency a.c. They are also used for bridging DOUBLE or REINFORCED INSULATION as part of the interference suppression regime. There are four types: Y1, Y2, Y3 and Y4. Y1 capacitors are designed for use with three phase mains and have a WORKING VOLTAGE of up to 500 V a.c. and a withstand voltage of 4 000 V a.c. Y2 capacitors are designed for use with single phase mains and have a WORKING VOLTAGE up to 300 V a.c. and a withstand voltage of 1 500 V a.c. Y3 capacitors are similar to Y2 capacitors but have a WORKING VOLTAGE up to 250 V a.c. Y4 capacitors are designed for use with low voltage mainsand have a WORKING VOLTAGE up to 150 V a.c. and a withstand voltage of 1 000 V a.c. These capacitors are safety critical since they provide a leakage path to earth or across a barrier. So they must be certified and monitored by a recognised test house to IEC 60384-14, which serves to control their manufacture.

Subclause 8.5.1.2 – MEANS OF PATIENT PROTECTION (MOPP)

CREEPAGE DISTANCES:

A detailed review of the requirements for CREEPAGE DISTANCES from IEC 62368-1:2018, IEC 60950-1:2005 and this standard confirmed that there were no significant changes in the requirements and that 2 MOOP according to IEC 62368-1:2018 will provide 1 MOPP according to this document.

--`,,```,,,,````-`-`,,`,,`,`,,`---

Copyright International Electrotechnical Commission
Provided by IHS Markit under license with IEC
No reproduction or networking permitted without license from IHS
Not for Resale, 08/26/2020 19:12:41 MDT

When determining creepage distances according to IEC 62368-1:2018, the largest value from IEC 62368-1:2018, Table 17 or Table 18 is always applied. This is clarified in the text at the bottom of IEC 62368-1:2018, Table 17.

AIR CLEARANCE:

Table 13 and Table 14 were reviewed to determine where barriers providing 2 MOOP would also satisfy the requirements for 1 MOPP from Table 12. Based on historical discussions, it has been assumed that 2 MOOP would always also meet the requirements for 1 MOPP with respect to AIR CLEARANCE requirements; however, limitations were identified which led to the addition of NOTE 4 in Table 12.

IEC 60950-1:2005, Table 2K and Table 2L and IEC 62368-1:2018, Table 10 to Table 15 (inclusive) were evaluated for the same purpose and compared to Table 12.

This review of the requirements for AIR CLEARANCE between Table 12, IEC 60950-1:2005, Table 2K and Table 2L and IEC 62368-1:2018, Table 10 to Table 14 (inclusive) identified limitations for when 2 MOOP would provide 1 MOPP. This is important when evaluating separation from the SUPPLY MAINS (typically provided by a switch mode power supply or similar component) since a barrier providing 2 MOOP will not always provide 1 MOPP as currently required by this document. Additional information and examples are provided below.

Table 13 is copied from IEC 60950-1:2005, Table 2K; Table 14 is copied from IEC 60950-1:2005, Table 2L.

The values documented in IEC 62368-1:2018 are based on the approach for AIR CLEARANCE values as specified in the basic safety publication IEC 60664-1. The values in this standard are not based on this same approach. Since the scope of Amendment 2 is fixed, a re-evaluation of the current AIR CLEARANCE requirements is not within the scope of this review. It is however expected that this review should be done as part of the fourth edition.

The results of this review identified that the requirements for 2 MOOP according Table 13 and Table 14, or IEC 60950-1:2005, Table 2K and Table 2L will meet the requirements for 1 MOPP according to Table 12 only up to and including a WORKING VOLTAGE of 707 V d.c. / 500 V r.m.s. (Rows 1 to 7 of Table 12).

Examples:

Table 12, Table 13 and Table 14 and IEC 60950-1:2005, Table 2K and Table 2L:

Example 1 (Acceptable): A 240 V r.m.s. mains powered switch mode power supply with a WORKING VOLTAGE of 400 V r.m.s. across the switching barrier would require 3,5 mm AIR CLEARANCE for 1 MOPP according to Row 6 of Table 12. Assumptions: Overvoltage Category II, Pollution degree 2, Altitude 2 000 m.

The requirement for 2 MOOP from Table 13 would be 4,0 mm (Row 2, based voltage of 340 V peak / 240 V r.m.s., based on the RATED MAINS VOLTAGE, see 8.9.1.10) plus 0,4 mm from Table 14 (PEAK WORKING VOLTAGE, which would be a minimum of 566 V peak; Row 3) equal to 4,4 mm AIR CLEARANCE total. Assumptions: Overvoltage Category II, Pollution degree 1, 2 and 3, Altitude 2 000 m.

In this example, the minimum AIR CLEARANCE would not be less than 4,4 mm which meets the requirement of 2,5 mm from Row 6 of Table 12.

Example 2 (Unacceptable): A 240 V r.m.s. mains powered switch mode power supply with a WORKING VOLTAGE of 401 V r.m.s. across the switching barrier would require 4,5 mm AIR CLEARANCE for 1 MOPP according to Row 7 of Table 12. Assumptions: Overvoltage Category II, Pollution degree 2, Altitude 2 000 m.

Copyright International Electrotechnical Commission
Provided by IHS Markit under license with IEC
No reproduction or networking permitted without license from IHS Not for Resale, 08/26/2020 19:12:41 MDT

The requirement for 2 MOOP from Table 13 would be 4,0 mm (Row 2, based voltage of 340 V peak / 240 V r.m.s., based on the RATED MAINS VOLTAGE, see 8.9.1.10) plus 0,4 mm from Table 14 (PEAK WORKING VOLTAGE, which would be a minimum of 567 V peak; Row 3) equal to 4,4 mm AIR CLEARANCE TOTAL. Assumptions: Overvoltage Category II, Pollution degree 1, 2 and 3, Altitude 2 000 m.

In this example, the minimum AIR CLEARANCE could be 4,4 mm which does not meet the requirement of 4,5 mm from Row 7 of Table 12.

A comparison between Table 12 and IEC 62368-1:2018, Table 10 to Table 14 (inclusive) was also performed. This comparison determined that DOUBLE INSULATION or REINFORCED INSULATION according to IEC 62368-1:2018 (which is equivalent to 2 MOOP) will meet the requirements for 1 MOPP according to Table 12 only up to and including 354 V d.c. / 250 V r.m.s.

Table 12 and IEC 62368-1:2018, Table 10 to Table 14 (inclusive):

Example 3 (Acceptable): A 240 V r.m.s. mains powered switch mode power supply with a WORKING VOLTAGE of 250 V r.m.s. across the switching barrier would require 2,5 mm AIR CLEARANCE for 1 MOPP according to Row 5 of Table 12. Assumptions: Overvoltage Category II, Pollution degree 2, Altitude 2 000 m.

The requirement for REINFORCED INSULATION (2 MOOP) from IEC 62368-1:2018 is taken as the higher value of the values determined per Procedure 1 or Procedure 2:

Procedure 1: Assume altitude of 2 000 m (no multiplication factor for AIR CLEARANCES)

– IEC 62368-1:2018, Table 10 would be 2,54 mm (Row 9, based on a temporary overvoltage of 2 000 V); Pollution degree 2
– IEC 62368-1:2018, Table 11 would be 0,14 mm (Row 1, based on peak voltage of 354 V); Pollution degree 2
– Highest value = 2,54 mm

Procedure 2: Assume altitude of 2 000 m (no multiplication factor for AIR CLEARANCES); Pollution degree 2

– IEC 62368-1:2018, Table 14 would be 3,0 mm (Row 10, based on mains transient voltage of 2 500 V)

As an alternative to Procedure 2, the value from Procedure 1 can be used with an additional electric strength test according to IEC 62368-1:2018, Table 15.

In either case the minimum AIR CLEARANCE would not be less than 2,54 mm which meets the requirement of 2,5 mm from Row 5 of Table 12.

Example 4 (Unacceptable): A 240 V r.m.s. mains powered switch mode power supply with a working voltage of 251 V r.m.s. across the switching barrier would require 3,5 mm AIR CLEARANCE for 1 MOPP according to Row 6 of Table 12. The requirement for REINFORCED INSULTATION (2 MOOP) is taken as the higher value of the values determined per IEC 62368-1:2018 Procedure 1 or Procedure 2:

Procedure 1: Assume altitude of 2 000 m (no multiplication factor for AIR CLEARANCES)

– IEC 62368-1:2018, Table 10 would be 2,54 mm (Row 9, based on a temporary overvoltage of 2 000 V); Pollution degree 2
– IEC 62368-1:2018, Table 11 would be 0,14 mm (Row 1, based on peak voltage of 355 V); Pollution degree 2

Copyright International Electrotechnical Commission
Provided by IHS Markit under license with IEC
No reproduction or networking permitted without license from IHS Not for Resale, 08/26/2020 19:12:41 MDT

– Highest value = 2,54 mm

Procedure 2: Assume altitude of 2 000 m (no multiplication factor for AIR CLEARANCES); Pollution degree 2

– IEC 62368-1:2018, Table 14 would be 3,0 mm (Row 10, based on mains transient voltage of 2 500 V)

As an alternative to Procedure 2, the value from Procedure 1 can be used with an additional electric strength test according to IEC 62368-1:2018, Table 15. In this case, the minimum AIR CLEARANCE could be 2,54 mm.

Neither 3,0 mm nor 2,54 mm meet the requirement of 3,5 mm from Row 6 of Table 12.

Additional information on differences between the methods for determining AIR CLEARANCE requirements between this standard, IEC 60950-1:2005 and IEC 62368-1:2018:

A number of differences in the methods for determining the AIR CLEARANCE requirements between the standards evaluated were identified. The method specified in IEC 62368-1:2018 is more complicated than the method used according to this standard and IEC 60950-1:2005. These differences were discussed with experts from IEC TC 108 (technical committee for IEC 60950-1:2005 and IEC 62368-1:2018) to confirm these differences were properly understood by experts from IEC/TC 62. One of the differences is that WORKING VOLTAGE (d.c. or r.m.s.) is used to determine the AIR CLEARANCE requirements according to this standard or IEC 60950-1:2005. IEC 62368-1:2018 instead uses the term “voltage” which can have three different meanings depending on the circuit. “Voltage” can mean either the peak value of the working voltage, the transient overvoltage or the temporary overvoltage–in all cases, the highest value of this “voltage” is used to determine the AIR CLEARANCE requirement.

IEC TC 108 published a Technical Report (IEC TR 62368-2 [77]) which explains the process. The excerpt shown below is intended to provide a basic overview of how AIR CLEARANCE requirements according to IEC 62368-1:2018 are determined.

Copyright International Electrotechnical Commission
Provided by IHS Markit under license with IEC
No reproduction or networking permitted without license from IHS Not for Resale, 08/26/2020 19:12:41 MDT

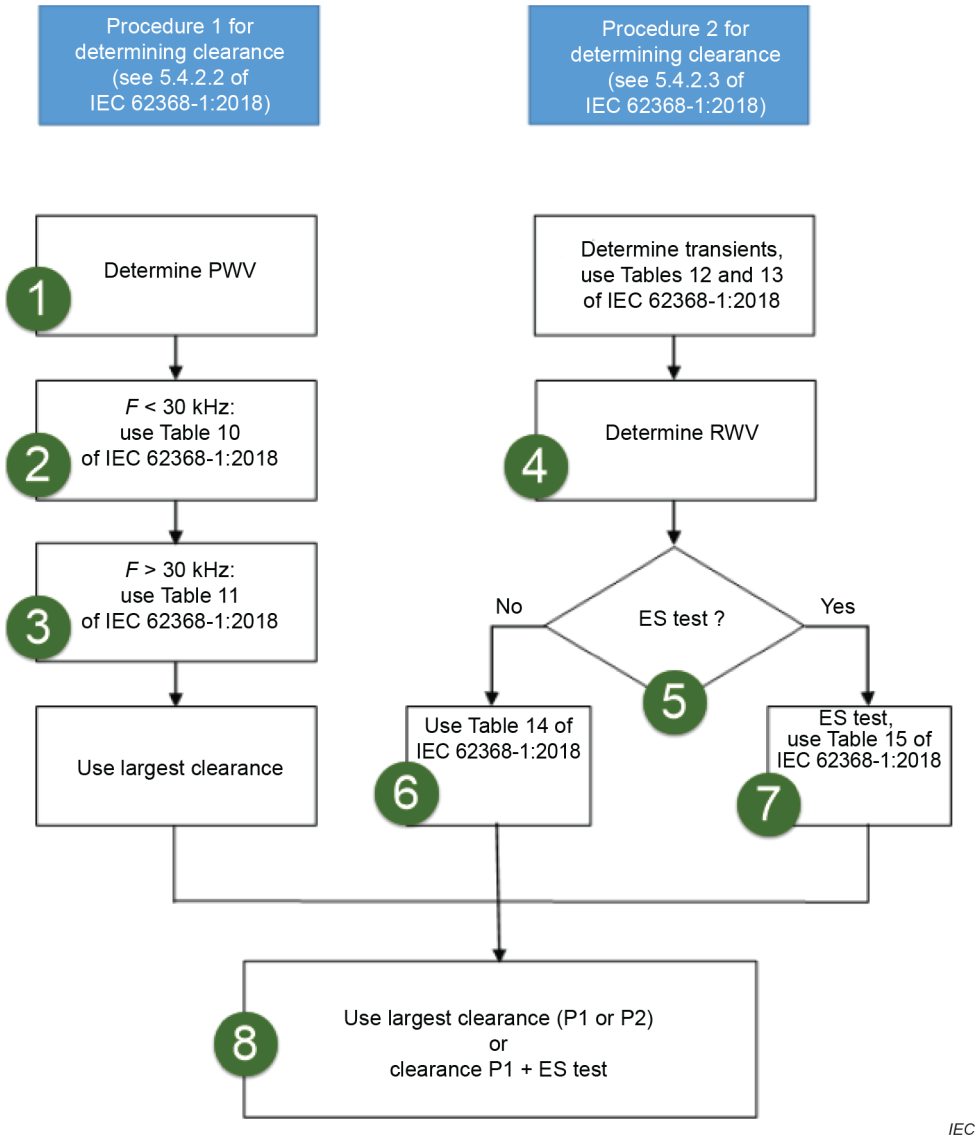

Figure A.26 – Procedure for determination of AIR CLEARANCE requirements IEC TR 62368-2:2019 [77], 5.4.2.1 (modified)

The steps 1-8 identified in Figure A.26 have been added to aid in the explanation below:

Procedure 1 (P1)

Step 1: Determine the peak of the working voltage (PWV)–for a mains connected switch mode power supply, this would be the peak value of the switching voltage, not the peak value of the SUPPLY MAINS voltage.

Step 2: IEC 62368-1:2018, Table 10 is used to determine the required AIR CLEARANCE. For mains connected equipment, this table will always be applicable. When using this table, it is the temporary overvoltage that is used in the voltage column (not the SUPPLY MAINS voltage). IEC 62368-1:2018, 5.4.2.2 specifies a temporary overvoltage of 2 000 V peak to be used if the SUPPLY MAINS voltage does not exceed 250 V (assumed to mean 250 V r.m.s.). For SUPPLY MAINS voltages above 250 V and not exceeding 600 V, the temporary overvoltage is 2 500 V peak. Using this information along with the pollution degree, IEC 62368-1:2018, Table 10 provides a value for the required AIR CLEARANCE.

Copyright International Electrotechnical Commission
Provided by IHS Markit under license with IEC
No reproduction or networking permitted without license from IHS
Not for Resale, 08/26/2020 19:12:41 MDT

Step 3: Using the peak of the WORKING VOLTAGE, IEC 62368-1:2018, Table 11 will provide a value for the required AIR CLEARANCE assuming Pollution Degree 2. For pollution degree 1 or pollution degree 3, the multiplication factor specified in the table is used.

The largest value from Step 2 or Step 3 is recorded as the requirement.

Procedure 2 (P2)

Step 4: Determine the required withstand voltage (RWV). The RWV is based on the supply circuit and is either a transient voltage, AC mains transient voltage, DC mains transient voltage or external circuit transient voltage. IEC 62368-1:2018 provides requirements for either determining this voltage based on information about the supply circuit or measuring this voltage. As an example, a SUPPLY MAINS circuit operating at 240 V r.m.s. would use the AC mains transient voltage of 2 500 V peak for an overvoltage category II supply (IEC 62368-1:2018, Table 12).

Step 5: There are 2 methods of satisfying Procedure 2, Method A or Method B:

Method A: Apply IEC 62368-1:2018, Table 14 to determine an AIR CLEARANCE value (Step 6), or

Method B: Apply IEC 62368-1:2018, Table 15 to determine an electric strength test value to be used (Step 7).

Step 6: Take the RWV value determined in Step 4 and determine the required AIR CLEARANCE from IEC 62368-1:2018, Table 14 using the RWV along with the pollution degree. Skip Step 7.

Step 7: Use IEC 62368-1:2018, Table 15 to determine the electric strength test voltage using the RWV determined in Step 4.

Step 8: Determine the required AIR CLEARANCE–this is either the highest value determined using Procedure 1 (Step 3) and Procedure 2 (Step 6) or the value from Procedure 1 (Step 3) with the electric strength test (Step 7).

Subclause 8.5.2.1 – F-TYPE APPLIED PARTS

The essential feature of an F-TYPE APPLIED PART is its separation from other parts. This subclause specifies and quantifies the necessary degree of separation.

Multiple functions can be considered as multiple APPLIED PARTS (which have to be separated from each other by one MEANS OF PATIENT PROTECTION) or as one APPLIED PART. This is decided by the MANUFACTURER after assessing the RISK that earthing of one or more of the PATIENT CONNECTION(S) of one function could result in excessive LEAKAGE CURRENT through the PATIENT CONNECTION(S) of another function, in the condition in which an unintended voltage originating from an external source becomes connected to the PATIENT.

The 500 V r.m.s. limit for protective devices was already specified in the first edition of this standard. The original rationale is not known, but this voltage corresponds to the highest RATED voltage specified in 4.10.

Subclause 8.5.2.2 – TYPE B APPLIED PARTS

This requirement addresses the possibility that an unintended voltage originating from an external source becomes connected to a part of the ME EQUIPMENT. In the absence of appropriate separation between such a part and PATIENT CONNECTIONS, an excessive PATIENT LEAKAGE CURRENT could result.

Copyright International Electrotechnical Commission
Provided by IHS Markit under license with IEC
No reproduction or networking permitted without license from IHS Not for Resale, 08/26/2020 19:12:41 MDT

According to Clause 17 c) of the second edition of this standard, this requirement applied to all APPLIED PARTS, but in many cases it no longer applies:

– For F-TYPE APPLIED PARTS, the isolation required by 8.5.2.1 also covers this situation (but TYPE BF APPLIED PARTS require an additional test, as explained in the rationale to 8.7.4.7 d)).

– A HAZARDOUS SITUATION cannot develop if either the ME EQUIPMENT part concerned or the PATIENT CONNECTIONS of a TYPE B APPLIED PART are PROTECTIVELY EARTHED. (Failure of the PROTECTIVE EARTH CONNECTION together with the appearance of the unintended voltage would be a double fault condition.)

– If the ME EQUIPMENT part concerned is physically contiguous with the APPLIED PART (for example a dental handpiece) the requirement does not apply if the RISK of contact with a source of voltage or LEAKAGE CURRENT above permitted limits is acceptably low.

Subclause 8.5.2.3 – PATIENT leads or PATIENT cables

There are two sets of circumstances to guard against:

– firstly, for TYPE BF APPLIED PARTS and TYPE CF APPLIED PARTS, there should be no possibility of an accidental PATIENT-to-earth connection via any lead that can become detached from the ME EQUIPMENT; even for a TYPE B APPLIED PART an unwanted connection to earth can have an adverse effect on the operation of the ME EQUIPMENT;

– secondly, for all types of APPLIED PART, there should be no possibility of connecting the PATIENT accidentally to parts of ME EQUIPMENT or other conductive parts in the vicinity from which a current in excess of the allowable LEAKAGE CURRENT could flow.

An extreme case of the latter HAZARD would be a direct connection to the SUPPLY MAINS, resulting from insertion of the connector into a mains outlet or into the socket end of a DETACHABLE POWER SUPPLY CORD. It is essential to prevent this from occurring.

With certain combinations of PATIENT and MAINS CONNECTORS it will be possible to plug the PATIENT connector accidentally into the mains socket.

This possibility cannot reasonably be removed by dimensional requirements as to do so would make single-pole connectors excessively large. Such an incident is rendered safe by the requirement for the PATIENT connector to be protected by insulation having a CREEPAGE DISTANCE of at least 1,0 mm and a dielectric strength of at least 1 500 V. The latter on its own would not suffice as 1 500 V protection could easily be achieved by thin plastic foil that would not stand up to daily wear or to being pushed, possibly repeatedly, into a mains socket. For this reason also it can be seen that the insulation should be durable and rigid.

The wording of this requirement was modified from that in the second edition of this standard to avoid use of the phrases “conductive connection”, which was eliminated as a defined term. This change was a direct result of National Committee comments during the preparation of this edition.

According to the rationale in the second edition of this standard, the test in which the test finger is applied with a force of 10 N was intended “to check the strength of the insulating material.” This has now been supplemented by an explicit cross reference to 8.8.4.1.

In response to an enquiry, one National Committee stated that this test is “a mechanical test of the protective cover over the pin;” suggesting that the test was intended to apply specifically to one particular kind of connector design, in which the contact is surrounded by a movable sheath designed to allow contact with the correct mating connector but not with other parts.

During the development of this edition of this standard, the question arose whether this test should be restricted to single-pole connectors, as in the second edition of this standard, or should apply to multi-pole connectors as well. Some multi-pole connectors are of similar shape to single-pole connectors and could similarly be inserted into a MAINS CONNECTOR, so the same considerations of adequacy of insulation apply equally. On the other hand, typical

Copyright International Electrotechnical Commission
Provided by IHS Markit under license with IEC
No reproduction or networking permitted without license from IHS Not for Resale, 08/26/2020 19:12:41 MDT

kinds of multi-pole connectors that are in common use cannot be inserted into a MAINS CONNECTOR, but would fail this test if they were subject to it, because the test finger can easily touch their contacts, even without the application of a 10 N force.

A further enquiry to the National Committees yielded a range of responses, with reasonable consensus on some questions but no consensus as to whether this test should apply to all connectors or should be restricted to single-pole connectors.

This test should certainly apply to a multi-pole connector that is of such shape and size that it could be inserted into a mains socket. In this case, the RISK is the same as with a single-pole connector.

Another reason for applying this test to some multi-pole connectors is that the test with the flat plate does not exhaustively assess the possibility of contact with conductive parts in the vicinity from which a current in excess of the allowable LEAKAGE CURRENT could flow. Almost any kind of connector, if detached from the ME EQUIPMENT or dropped, could possibly make contact with something besides the intended mating connector, but the RISK depends on the shape of the connector and the circumstances. In most cases the RISK is low. For example a typical “D” connector is likely to make contact with an earthed object only momentarily, whereas a straight pin could make contact for a prolonged period. However even prolonged contact with a metal object can result in a HAZARDOUS SITUATION only if it occurs in combination with a fault or abnormal situation that allows an excessive current to flow through the PATIENT. The RISK is in all cases much less than the RISK if the connector can make contact with a mains socket. The requirements of this standard should be formulated in relation to the RISK. The standard should minimise RISK to the PATIENT, while allowing MANUFACTURERS a reasonable range of choice of connectors.

“Any connector” should be understood to include multiple contact connectors, several connectors and connectors in series.

The dimension of 100 mm diameter is not in the least important and merely serves to indicate the scale of the flat surface. Any sheet of conductive material larger than this would be suitable.

Subclause 8.5.3 – MAXIMUM MAINS VOLTAGE

Several requirements and tests of this standard relate to the possibility that an unintended voltage originating from an external source becomes connected to the PATIENT or to certain parts of the ME EQUIPMENT. The actual magnitude of such a voltage is unknown; but according to the second edition of this standard it was taken to be the highest RATED MAINS VOLTAGE, or for polyphase equipment the phase to neutral supply voltage. These values reflected a reasonable worst-case assumption that the actual unintended external voltage is unlikely to exceed the voltage of the SUPPLY MAINS in the location where the ME EQUIPMENT is used, and that ME EQUIPMENT is unlikely to be used in a location where the SUPPLY MAINS has a voltage higher than its highest RATED MAINS VOLTAGE. For INTERNALLY POWERED ME EQUIPMENT the value specified is 240 V, because this is the highest commonly encountered phase-to-neutral voltage in locations where ME EQUIPMENT is used.

In early drafts of this edition, the corresponding wording only referred to a.c. SUPPLY MAINS. This mistake was pointed out during the comment period. Discussion of this comment confirmed that the requirements should not depend on whether the SUPPLY MAINS is a.c. or d.c., but revealed a further anomaly. If ME EQUIPMENT is specified for connection to an extra-low voltage (ELV) SUPPLY MAINS (for example 12 V in an ambulance) but not to any higher voltage SUPPLY MAINS, the external voltage assumed for test purposes would be only the ELV. Such ME EQUIPMENT could however be used in locations where a higher voltage SUPPLY MAINS is also installed. The wording has therefore been revised to remove this anomaly.

If ME EQUIPMENT has a highest RATED supply voltage less than 100 V, it will necessarily be used in a special location where that supply is available, and we do not know what other supplies could also be present. Therefore the external voltage assumed for relevant tests is 240 V, as for INTERNALLY POWERED ME EQUIPMENT.

Copyright International Electrotechnical Commission
Provided by IHS Markit under license with IEC
No reproduction or networking permitted without license from IHS Not for Resale, 08/26/2020 19:12:41 MDT

Subclause 8.5.4 – WORKING VOLTAGE

The dielectric strength test voltages specified in Table 6 are appropriate for insulation that is normally subjected to a continuous WORKING VOLTAGE and to transient overvoltages.

The WORKING VOLTAGE for each MEANS OF PROTECTION forming DOUBLE INSULATION is the voltage to which the DOUBLE INSULATION as a whole is subjected, because either MEANS OF PROTECTION can be subjected to this voltage if the other MEANS OF PROTECTION fails.

For DEFIBRILLATION-PROOF APPLIED PARTS, a test voltage deduced on the basis of a WORKING VOLTAGE equal to the defibrillation peak voltage would be far too high for insulation that in NORMAL USE is exposed only occasionally to voltage impulses, normally shorter than 1 s and without additional overvoltage.

Subclause 8.5.5 – DEFIBRILLATION-PROOF APPLIED PARTS

The special test described in 8.5.5 is considered to ensure sufficient protection against exposure to defibrillation pulses, no separate dielectric strength test being necessary.

Subclause 8.5.5.1 – Defibrillation protection

One or the other of the defibrillation paddles could, by virtue of its clinical application, be connected to earth or at least referenced to earth.

When a defibrillator is used on the PATIENT, a HIGH VOLTAGE can thus be impressed either between one part of the ME EQUIPMENT and another, or between such parts collectively and earth. ACCESSIBLE PARTS should be adequately isolated from PATIENT CONNECTIONS or protected in some other way. The insulation of the PATIENT CONNECTIONS cannot be protected by voltage limiting devices relying on earthed connections.

The DEFIBRILLATION-PROOF APPLIED PART marking indicates that an APPLIED PART can safely remain attached to a PATIENT who is being defibrillated without any adverse effect on subsequent use of the ME EQUIPMENT.

The tests ensure:

a) that any ACCESSIBLE PARTS of ME EQUIPMENT, PATIENT cables, cable connectors, etc. that are not PROTECTIVELY EARTHED will not deliver a hazardous level of charge or energy due to flashover of defibrillation voltage; and

b) that the ME EQUIPMENT will continue to function (at least with regard to BASIC SAFETY and ESSENTIAL PERFORMANCE) after exposure to defibrillation voltage.

The requirement and the test PROCEDURE refer to “any necessary time” stated in the ACCOMPANYING DOCUMENTS. There is no requirement for the ACCOMPANYING DOCUMENTS to include a statement of a recovery time, but if there is no statement the ME EQUIPMENT has to recover and deliver its BASIC SAFETY and ESSENTIAL PERFORMANCE immediately.

The tests are conducted with the ME EQUIPMENT connected to the SUPPLY MAINS and in operation according to the instructions for use because the tests deal not only with the effect of the defibrillation energy on BASIC SAFETY but also on the ability of the ME EQUIPMENT to deliver its ESSENTIAL PERFORMANCE after the stated recovery time.

NORMAL USE includes the situation that a PATIENT is defibrillated while connected to the ME EQUIPMENT and, at the same time, the OPERATOR or another person is in contact with the ENCLOSURE. The possibility of this occurring at the same time as the SINGLE FAULT CONDITION of a defective PROTECTIVE EARTH CONNECTION is very unlikely and is therefore disregarded. However, interruption of functional earth connections is more probable, and is therefore required for these tests.

The SEVERITY of electric shock that a person receives when touching ACCESSIBLE PARTS during the discharge of a defibrillator is limited to a value (corresponding to a charge of 100 μC) which can be felt and which could be unpleasant, but which is not dangerous.

Copyright International Electrotechnical Commission
Provided by IHS Markit under license with IEC
No reproduction or networking permitted without license from IHS Not for Resale, 08/26/2020 19:12:41 MDT

SIGNAL INPUT/OUTPUT PARTS are included, as signal lines to remote ME EQUIPMENT could otherwise carry energies that might be hazardous.

The test circuits of Figure 9 and Figure 10 of this standard are designed to simplify the test by integrating the voltage appearing across the test resistance (R_1).

The value of the inductance L in the test circuits of Figure 9 and Figure 10 is chosen to provide a shorter than normal rise time in order to test adequately the incorporated protective means.

If ME EQUIPMENT would be designed according to 8.5.2.1 and 8.5.5.1, it might have two different functions on one common APPLIED PART circuit. Consider the example in Figure A.21. In this example, the ECG and an invasive blood pressure catheter (IBP) share one common APPLIED PART circuit. In real use in the hospital, sometimes only one function (ECG) is used while the other function (IBP) is not connected. If the PATIENT needs to be defibrillated, there is a potential that a second OPERATOR would get an electric shock at unused IBP outlets during selecting of proper adjustments at the ME EQUIPMENT (e.g. at a multi-parameter patient monitor). It should be pointed out that in principle, the 5 KV could occur at every disconnected connector, which does not have adequate recessed pins. However, in practice, the probability of occurrence of HARM is much higher at the unused APPLIED PART outlets on the ME EQUIPMENT compared to any connector of adapter cables. Adapter cables will normally not be touched by the OPERATOR during defibrillation, because before defibrillation the command "stand clear" will be given. Even in the case that a disconnected adapter cable would be touched by an OPERATOR during defibrillation, it will most probably be touched at the isolated plastic parts, but not at its internal pins.

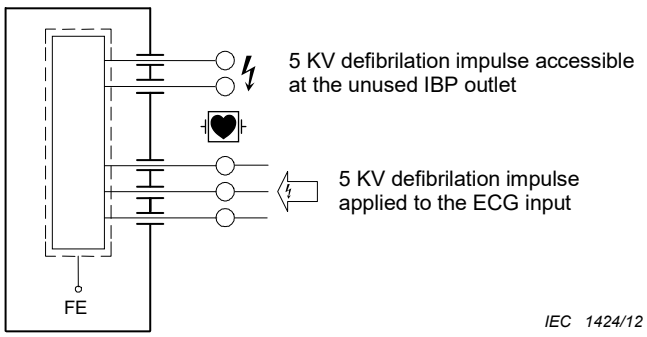

Figure A.21 – Example of ME EQUIPMENT having two different functions on one common APPLIED PART circuit

Rationale for impulse test voltage

When a defibrillation voltage is applied to the thorax of a PATIENT, via externally applied paddles (or defibrillation electrodes), the body tissue of the PATIENT in the vicinity of the paddles and between the paddles becomes a voltage dividing system.

The voltage distribution can be gauged roughly using three-dimensional field theory but is modified by local tissue conductivity that is far from uniform.

If the electrode of another item of ME EQUIPMENT is applied to the PATIENT, roughly within the compass of the defibrillator paddles, the voltage to which such an electrode is subjected depends on its position but will generally be less than the on-load defibrillation voltage.

Unfortunately it is not possible to say how much less as the electrode in question can be placed anywhere in this area, including immediately adjacent to one of the defibrillator paddles. In the absence of a relevant particular standard, it is required that such an electrode and the ME EQUIPMENT to which it is connected is able to withstand the full defibrillation voltage. This is the no-load voltage as one of the defibrillator paddles might not be making good contact with the PATIENT.

Copyright International Electrotechnical Commission
Provided by IHS Markit under license with IEC
No reproduction or networking permitted without license from IHS
Not for Resale, 08/26/2020 19:12:41 MDT

This standard therefore specifies 5 kV d.c. as the appropriate test voltage in the absence of a relevant particular standard.

Applying Subclause 4.5, a MANUFACTURER is allowed to use alternate means to address a RISK covered by this standard if the RESIDUAL RISK after applying the alternate means is equal or less than the RESIDUAL RISK after applying the requirements of this standard. It is possible for a MANUFACTURER to determine that a lower test voltage is appropriate depending on the INTENDED USE of the ME EQUIPMENT and the location of the APPLIED PARTS on the PAIENT if it can be demonstrated that the test voltage selected is the maximum voltage that can appear on the APPLIED PART with 5 kV applied to the chest. Such parts can be classified and marked as a DEFIBRILLATION-PROOF APPLIED PARTS.

Subclause 8.6 – Protective earthing, functional earthing and potential equalization of ME EQUIPMENT

Typically, metal ACCESSIBLE PARTS of CLASS I ME EQUIPMENT are PROTECTIVELY EARTHED. However, they could be separated by other MEANS OF PROTECTION, in accordance with 8.5. Also some metal ACCESSIBLE PARTS could be earthed incidentally, neither by a PROTECTIVE EARTH CONNECTION nor for functional purposes. For example, such a part could be in contact with another part that is PROTECTIVELY EARTHED but does not itself need to be PROTECTIVELY EARTHED.

Subclause 8.6.1 – Applicability of requirements

PROTECTIVE EARTH CONNECTIONS that are only relevant to the safety of OPERATORS are allowed to comply either with the requirements of this standard or with those of IEC 60950-1:2005, IEC 60950-1:2005/AMD1:2009 and IEC 60950-1:2005/AMD2:2013, but the latter alternative is not allowed for PROTECTIVE EARTH CONNECTIONS that are relevant to the safety of both OPERATORS and PATIENTS.

Subclause 8.6.2 – PROTECTIVE EARTH TERMINAL

These requirements are intended to ensure a reliable connection between the ME EQUIPMENT and the protective earthing system of the electrical installation.

Subclause 8.6.3 – Protective earthing of moving parts

Connections to moving parts, whether made by sliding contacts, by flexible wires or by any other means, could be more susceptible than ordinary FIXED connections to deterioration during the EXPECTED SERVICE LIFE of the ME EQUIPMENT. Therefore, they are not acceptable as PROTECTIVE EARTH CONNECTIONS unless their reliability is demonstrated.

Subclause 8.6.4 a)

PROTECTIVE EARTH CONNECTIONS can only perform their protective function if they are able to carry the fault current resulting from a failure in BASIC INSULATION.

Such a current is assumed to have sufficient amplitude to cause operation of protective devices in the electrical installation (fuses, circuit-breakers, earth leakage circuit-breakers and the like) in a reasonably short time.

It is therefore necessary to check both the impedance and the current-carrying capability of PROTECTIVE EARTH CONNECTIONS.

The minimum time required for the test current is intended to reveal any overheating of parts of the connection due to thin wiring or a bad contact. Such a “weak spot” might not be discovered by resistance measurement alone.

PROTECTIVE EARTH CONNECTIONS can have zones of higher impedance, for example due to oxidation of materials. Use of a current source with an unlimited voltage could prevent detection of such zones because of their ability to flash through. The impedance is therefore determined first, using a limited voltage.

--`,,```,,,,````-`-`,,`,,`,`,,`---

Copyright International Electrotechnical Commission
Provided by IHS Markit under license with IEC
No reproduction or networking permitted without license from IHS Not for Resale, 08/26/2020 19:12:41 MDT

If this voltage is sufficient to drive the specified test current through the total impedance, then this one test also serves to demonstrate the current-carrying capability of the connection. Otherwise an additional test is necessary, either using a higher voltage or by assessing the cross-sectional area of the connection by inspection.

Where a long (> 3 m) DETACHABLE POWER SUPPLY CORD is supplied, specified or used, the 200 mΩ total protective earth pathway requirement still applies. Therefore, it might be necessary to use a DETACHABLE POWER SUPPLY CORD with conductors of a greater cross sectional area than the minimum required by 8.11.3.3.

If the MANUFACTURER does not supply/specify a DETACHABLE POWER SUPPLY CORD, the RESPONSIBLE ORGANIZATION should take into account the limits of 8.6.4.

Subclause 8.6.4 b)

The fault current could be limited to a relatively low value because of inherent impedance or the characteristic of the power source, for example where the power system is not connected to earth or connected to it via a high impedance (see Figure A.13).

In such cases, the cross-section of the PROTECTIVE EARTH CONNECTION can be determined primarily by mechanical considerations.

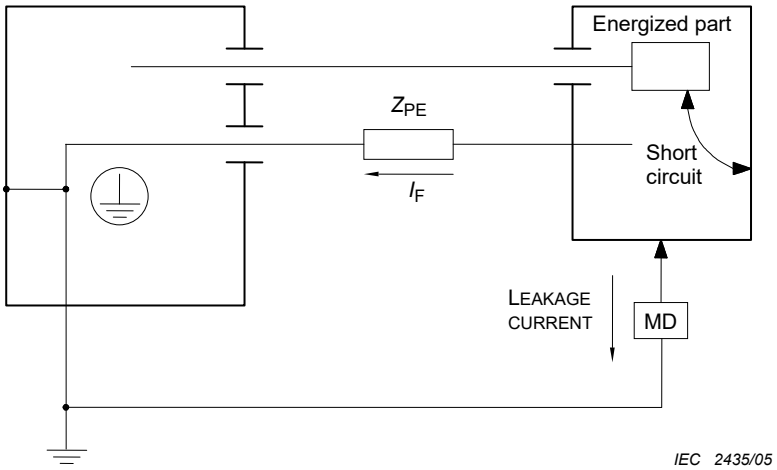

Legend

Z_{PE} = Impedance of PROTECTIVE EARTH CONNECTION in ohms (exceeding the limit specified in 8.6.4 a))

I_F = Maximum continuous prospective fault current in amperes in the PROTECTIVE EARTH CONNECTION caused by a single failure of the insulation to earth

MD Measuring device (see Figure 12)

NOTE The figure shows ME EQUIPMENT having a main ENCLOSURE and a remote part in a separate ENCLOSURE, as an example of a situation where the impedance of a PROTECTIVE EARTH CONNECTION could exceed the limit specified in 8.6.4 a): however this situation could also exist in ME EQUIPMENT having a single ENCLOSURE.

Figure A.12 – Allowable protective earth impedance where the fault current is limited

Subclause 8.6.7 – POTENTIAL EQUALIZATION CONDUCTOR

Medically used rooms in most countries have no facilities for the use of detachable POTENTIAL EQUALIZATION CONDUCTORS. This standard therefore does not require any means to be provided for the connection of a POTENTIAL EQUALIZATION CONDUCTOR to the ME EQUIPMENT. If however the ME EQUIPMENT does have such means, for use in locations where POTENTIAL EQUALIZATION CONDUCTORS are used, the appropriate requirements have to be satisfied.

Copyright International Electrotechnical Commission
Provided by IHS Markit under license with IEC
No reproduction or networking permitted without license from IHS Not for Resale, 08/26/2020 19:12:41 MDT

Subclause 8.6.9 – CLASS II ME EQUIPMENT

This requirement allows a CLASS II ME EQUIPMENT to have a connection to protective earth for functional reasons only. Green/yellow is required to avoid confusion in installation. The allowance does not degrade the degree of protection against electric shock.

The current flowing through the FUNCTIONAL EARTH CONDUCTOR has to be limited in the same way as current in the PROTECTIVE EARTH CONDUCTOR. To prevent the FUNCTIONAL EARTH CONDUCTOR from becoming a PROTECTIVE EARTH CONDUCTOR, the insulation between internal screens including internal wiring connected to them and ACCESSIBLE PARTS needs to provide two MEANS OF PROTECTION.

Subclause 8.7.2 – SINGLE FAULT CONDITIONS

Short circuiting of one part of DOUBLE INSULATION would be likely to increase LEAKAGE CURRENT by a factor of the order of 2. In some cases the test could be difficult to carry out and, as the allowable values for SINGLE FAULT CONDITION are five times those for NORMAL CONDITION, the test would not provide useful information.

Subclause 8.7.3 – Allowable values, Table 3 and Table 4

The value of electric current flowing in the human or animal body that can cause a certain degree of stimulation varies from individual to individual, according to the way in which the connection to the body is made and according to the frequency of the current applied and its duration.

Currents of low frequency flowing directly into or through the heart considerably increase the danger of ventricular fibrillation. For currents of medium or high frequency, the RISK of electric shock is less or negligible, but the RISK of burning remains.

The sensitivity of the human or animal body to electric currents, depending upon the degree and nature of contact with the ME EQUIPMENT, leads to a system of classification reflecting the degree and quality of protection provided by the APPLIED PARTS (classified as TYPE B APPLIED PARTS, TYPE BF APPLIED PARTS and TYPE CF APPLIED PARTS). TYPE B APPLIED PARTS and TYPE BF APPLIED PARTS are generally suitable for applications involving external or internal contact with the PATIENT, excluding the heart. TYPE CF APPLIED PARTS are suitable for DIRECT CARDIAC APPLICATIONS with regard to LEAKAGE CURRENT.

In conjunction with this classification, the requirements for allowable LEAKAGE CURRENT have been formulated. The absence of sufficient scientific data concerning the sensitivity of the human heart for currents causing ventricular fibrillation still presents a problem.

Nevertheless, the publication of the first edition of this standard in 1977 provided engineers with data enabling them to design ME EQUIPMENT; and these requirements have proved over the years since then to ensure a very low level of RISK without being too onerous for designers.

The requirements for LEAKAGE CURRENT were formulated taking into account:

– that the possibility of ventricular fibrillation is influenced by factors other than only electrical parameters;

– that the values for allowable LEAKAGE CURRENTS in SINGLE FAULT CONDITION should be as high as is considered safe, taking into account statistical considerations, in order not to present designers with unnecessary difficulties; and

– that values for NORMAL CONDITION are necessary to create a safe condition in all situations by providing a sufficiently high safety factor with respect to SINGLE FAULT CONDITIONS.

The measurement of LEAKAGE CURRENTS has been described in a way that enables the use of simple instruments, avoiding different interpretations of a given case and indicating possibilities for periodic checking by the RESPONSIBLE ORGANIZATION.

--`,,```,,,,````-`-`,,`,,`,`,,`---

Copyright International Electrotechnical Commission
Provided by IHS Markit under license with IEC
No reproduction or networking permitted without license from IHS Not for Resale, 08/26/2020 19:12:41 MDT

Allowable values of LEAKAGE and PATIENT AUXILIARY CURRENTS for a.c. and d.c. composite waveforms with frequencies up to and including 1 kHz take account of the following considerations.

a) In general the RISK of ventricular fibrillation or pump failure increases with the value or duration, up to a few seconds, of the current passing through the heart. Some areas of the heart are more sensitive than others. That is, a current that causes ventricular fibrillation when applied to one part of the heart could have no effect when applied to another part of the heart.

b) The RISK is highest and approximately equal for frequencies in the 10 Hz to 200 Hz range. It is lower, by a factor of nearly 5, at d.c. and by approximately 1,5 at 1 kHz. Beyond 1 kHz, the RISK decreases rapidly [45]. However lower limits are needed for d.c. to prevent tissue necrosis with long-term application.

   The values in Table 3 and Table 4 apply to currents measured with the measuring device shown in Figure 12 a), which automatically allows for the reduced sensitivity at higher frequencies. SUPPLY MAINS frequencies of 50 Hz and 60 Hz are in the range of highest RISK.

c) Although as a general rule requirements in a general standard are less restrictive than the requirements in particular standards, some of the allowable values in Table 3 and Table 4 have been set at such a value that:
   – the majority of ME EQUIPMENT types can comply, and
   – they can be applied to most ME EQUIPMENT types (existing or future) for which no particular standards exist.

EARTH LEAKAGE CURRENT

The EARTH LEAKAGE CURRENT flowing through the PROTECTIVE EARTH CONDUCTOR is not a HAZARD per se. The PATIENT and OPERATOR are protected by specifying appropriately low values for PATIENT LEAKAGE CURRENT and TOUCH CURRENT in NORMAL CONDITION and in relevant SINGLE FAULT CONDITIONS including interruption of the PROTECTIVE EARTH CONDUCTOR. However, an excessive EARTH LEAKAGE CURRENT could pose a possible problem for the installation's earthing system and any circuit breakers operated by current imbalance detectors.

See also IEC 60364-7-710 [10].

TOUCH CURRENT

The limits are based on the following considerations.

d) The TOUCH CURRENT of ME EQUIPMENT is subject to the same values regardless of the type(s) of APPLIED PARTS, if any, because even ME EQUIPMENT that does not itself have a TYPE CF APPLIED PART could be used in situations where intracardiac PROCEDURES are performed.

e) Although TOUCH CURRENT flows from parts other than PATIENT CONNECTIONS, it can reach the PATIENT by chance contact through various paths, including a path via the OPERATOR.

f) The current density created at the heart by current entering the chest is 50 $\mu A/mm^2$ per ampere [46]. The current density at the heart for 500 μA (maximum allowable value in SINGLE FAULT CONDITION) entering the chest is 0,025 $\mu A/mm^2$, well below the level of concern.

g) The probability of the TOUCH CURRENT flowing through the heart and causing ventricular fibrillation or pump failure.

   TOUCH CURRENT could conceivably reach an intracardiac site if careless PROCEDURES are used in handling intracardiac conductors or fluid filled catheters. Such devices should

Copyright International Electrotechnical Commission
Provided by IHS Markit under license with IEC
No reproduction or networking permitted without license from IHS Not for Resale, 08/26/2020 19:12:41 MDT

always be handled with great care and always with dry rubber gloves. The following RISK ANALYSIS is based on pessimistic assumptions about the degree of care exercised.

The probability of a direct contact between an intracardiac device and an ME EQUIPMENT ENCLOSURE is considered to be very low, perhaps 1 in 100 medical procedures. The probability of an indirect contact via the medical staff is considered to be somewhat higher, say 1 in 10 medical procedures. The maximum allowable LEAKAGE CURRENT in NORMAL CONDITION is 100 μA, which itself has a probability of inducing ventricular fibrillation of 0,05. If the probability of indirect contact is 0,1 then the overall probability is 0,005. Although this probability would appear undesirably high, it should be recalled that with correct handling of the intracardiac device this probability can be reduced to that for mechanical stimulation alone, 0,001.

The probability of the TOUCH CURRENT rising to the maximum allowable level of 500 μA (SINGLE FAULT CONDITION) is considered to be 0,1 in departments with poor maintenance PROCEDURES. The probability of this current causing ventricular fibrillation is taken as 1.

The probability of accidental contact directly with the enclosure is, as above, considered as 0,01, giving an overall probability of 0,001, equal to the mechanical stimulation alone probability.

The probability of TOUCH CURRENT at the maximum allowable level of 500 μA (SINGLE FAULT CONDITION) being conducted to an intracardiac device via the medical staff is 0,01 (0,1 for the SINGLE FAULT CONDITION, 0,1 for accidental contact). Since the probability of this current causing ventricular fibrillation is 1, the overall probability is also 0,01. Again this probability is high; however it can be brought down to the mechanical stimulation alone probability of 0,001 by adequate medical procedures.

h) The probability of the TOUCH CURRENT being perceptible to the PATIENT.

The probability of 500 μA being perceptible is 0,01 for men and 0,014 for women when using grip electrodes with intact skin [45] [48]. There is a higher perceptibility for current passing through mucous membranes or skin punctures [48]. Since distribution is normal, there will be a probability that some PATIENTS will perceive very small currents. One person is reported to have sensed 4 μA passing through a mucous membrane [48].

PATIENT LEAKAGE CURRENT

The allowable value of PATIENT LEAKAGE CURRENT for ME EQUIPMENT with TYPE CF APPLIED PARTS in NORMAL CONDITION is 10 μA, which has a probability of 0,002 for causing ventricular fibrillation or pump failure when applied through small areas to an intracardiac site.

Even with zero current, it has been observed that mechanical irritation can produce ventricular fibrillation [50]. A limit of 10 μA is readily achievable and does not significantly increase the RISK of ventricular fibrillation during intracardiac procedures.

The 50 μA maximum allowed in SINGLE FAULT CONDITION for ME EQUIPMENT with TYPE CF APPLIED PARTS is based on a value of current that has been found, under clinical conditions, to have a very low probability of causing ventricular fibrillation or interference with the pumping action of the heart.

For catheters 1,25 mm - 2 mm diameter likely to contact the myocardium, the probability of 50 μA causing ventricular fibrillation is near 0,01 (see Figure A.14 and its explanation). Small cross-section area (0,22 mm^2 and 0,93 mm^2) catheters used in angiography have higher probabilities of causing ventricular fibrillation or pump failure if placed directly on sensitive areas of the heart.

The overall probability of ventricular fibrillation being caused by PATIENT LEAKAGE CURRENT in SINGLE FAULT CONDITION is 0,001 (0,1 for probability of SINGLE FAULT CONDITION, 0,01 probability of 50 μA causing ventricular fibrillation) equal to the probability for mechanical stimulation alone.

Copyright International Electrotechnical Commission
Provided by IHS Markit under license with IEC
No reproduction or networking permitted without license from IHS Not for Resale, 08/26/2020 19:12:41 MDT

The 50 μA current allowed in SINGLE FAULT CONDITION is not likely to result in a current density sufficient to stimulate neuromuscular tissues nor, if d.c., cause necrosis.

For ME EQUIPMENT with TYPE B APPLIED PARTS and TYPE BF APPLIED PARTS where the maximum allowable PATIENT LEAKAGE CURRENT under SINGLE FAULT CONDITION is 500 μA, the same rationale applies as that for TOUCH CURRENT since this current will not flow directly to the heart.

As the existence of an earth connection to a PATIENT is a NORMAL CONDITION, not only PATIENT AUXILIARY CURRENT but also PATIENT LEAKAGE CURRENT can flow for a prolonged period. A very low value of direct current is therefore necessary to avoid tissue necrosis, regardless of the classification of the APPLIED PART.

The appearance of MAINS VOLTAGE, from a low-impedance source, on the PATIENT CONNECTIONS of an F-TYPE APPLIED PART would have to be caused by a double failure of protective means in other ME EQUIPMENT, simultaneously connected to the PATIENT and complying with this standard or another IEC standard, or by a single failure of protective means in equipment not complying with a standard. As such this condition is extremely unlikely in good medical practice.

However the appearance of a lesser voltage, or of a LEAKAGE CURRENT from a source having an open-circuit voltage of the order of MAINS VOLTAGE, is possible.

Since the main safety feature of ME EQUIPMENT with an F-TYPE APPLIED PART is that the PATIENT is not earthed by the connection to the ME EQUIPMENT, the electrical separation of an F-TYPE APPLIED PART from earth is to have a minimum quality. This is assured by the requirement that, even if a hypothetical voltage of supply frequency and equal to the highest supply voltage to earth present in the location where the ME EQUIPMENT is used would appear on the PATIENT CONNECTIONS, the limit for the PATIENT LEAKAGE CURRENT would not be exceeded.

For TYPE CF APPLIED PARTS, the PATIENT LEAKAGE CURRENT will be limited to 50 μA, no worse than the previously discussed SINGLE FAULT CONDITION.

For TYPE BF APPLIED PARTS the maximum PATIENT LEAKAGE CURRENT under these conditions is 5 mA. Even this value entering the chest would produce only a current density at the heart of 0,25 μA/mm^2. This current would be very perceptible to the PATIENT, however the probability of its occurrence is very low. The RISK of harmful physiological effects is small and the MAXIMUM MAINS VOLTAGE used for this test represents a worst case, more severe than is likely to arise in practice.

Total PATIENT LEAKAGE CURRENT

The values of PATIENT LEAKAGE CURRENT in this standard are for a single function of a TYPE B APPLIED PART or TYPE BF APPLIED PART or a single PATIENT CONNECTION of a TYPE CF APPLIED PART. With multiple functions or multiple APPLIED PARTS the total PATIENT LEAKAGE CURRENT could be much higher. This total PATIENT LEAKAGE CURRENT is the vector sum of the individual PATIENT LEAKAGE CURRENTS. Therefore, it is necessary to specify limits for total PATIENT LEAKAGE CURRENT. These requirements are derived from IEC 60601-2-49:2001 [16].

This standard does not fix the number of APPLIED PARTS connected to a single PATIENT. It has been estimated that the number of APPLIED PARTS connected to a single PATIENT ranges from one to five.

Total PATIENT LEAKAGE CURRENT for TYPE CF APPLIED PARTS

For TYPE CF APPLIED PARTS the PATIENT LEAKAGE CURRENT for the NORMAL CONDITION is 10 μA. The following is to be considered for multiple PATIENT functions:

i) The current entering the heart is distributed over all of the PATIENT CONNECTIONS and is not applied to the same small sensitive area of the cardiac tissue.

j) The number of PATIENT CONNECTIONS connected directly to cardiac tissue is not likely to exceed three. Accordingly, the LEAKAGE CURRENT entering a single small area of the heart

--`,,```,,,,````-`-`,,`,,`,`,,`---

Copyright International Electrotechnical Commission
Provided by IHS Markit under license with IEC
No reproduction or networking permitted without license from IHS Not for Resale, 08/26/2020 19:12:41 MDT

is less than 50 μA and is in the vicinity of 15 μA to 20 μA for an algebraic summation of the currents. The current would be less for a vector summation. The probability of ventricular fibrillation, according to the rationale for PATIENT LEAKAGE CURRENT, is in the range of 0,003 even if all the PATIENT CONNECTIONS are very close together. This is not much different from the probability of 0,002 that is accepted for a single APPLIED PART connected directly to the heart.

k) The LEAKAGE CURRENT from APPLIED PARTS on the surface of the body flows in a distributed manner through the body. According to the rationale for PATIENT LEAKAGE CURRENT, 5 mA entering the chest produces a current density at the heart of 0,025 μA/mm^2.

Therefore, 50 μA for NORMAL CONDITION for total PATIENT LEAKAGE CURRENT is considered acceptable.

For SINGLE FAULT CONDITION the LEAKAGE CURRENT for TYPE CF APPLIED PARTS has been increased to 0,1 mA. The rationale for PATIENT LEAKAGE CURRENT gives a probability of 0,07 of ventricular fibrillation for current directly entering the heart. The probability of a SINGLE FAULT CONDITION was given as 0,1. This was over a decade ago. Because of improvements in design, more reliable components, better materials, and the use of RISK MANAGEMENT in accordance with ISO 14971 and the consequent use of associated tools, such as HAZARD based RISK ANALYSIS, the probability of a SINGLE FAULT CONDITION should be much less. It is now felt to be in the vicinity of at least 0,02. The probability of ventricular fibrillation is 0,07 × 0,02, or 0,0014, close to that accepted for a single TYPE CF APPLIED PART.

Total PATIENT LEAKAGE CURRENT for TYPE BF APPLIED PARTS

The total PATIENT LEAKAGE CURRENT has been increased to 500 μA for NORMAL CONDITION and to 1 000 μA for SINGLE FAULT CONDITION. As explained in k) above, the current density at the heart for current of 5 000 μA is quite small. There should be no concern for either the NORMAL CONDITION or the SINGLE FAULT CONDITION.

Total PATIENT LEAKAGE CURRENT caused by an external voltage on the PATIENT CONNECTION

For TYPE CF APPLIED PARTS, the limit has been increased to 100 μA. The rationale for PATIENT LEAKAGE CURRENT states that the probability of failure of protective earthing of CLASS I ME EQUIPMENT is 0,1 and that the probability of a fault in one MOP is less than 0,1. This was a decade ago. As explained earlier, these probabilities should be much lower today and are considered to be no worse than 0,02. The probability of MAINS VOLTAGE appearing on the PATIENT is 0,02 × 0,02, or 0,0004. This is below the probability of 0,001 accepted in the second edition of IEC 60601-1.

PATIENT AUXILIARY CURRENT

The allowable values for PATIENT AUXILIARY CURRENT are based on similar considerations to those for PATIENT LEAKAGE CURRENT. They apply regardless of whether the PATIENT AUXILIARY CURRENT is necessary for the functioning of the ME EQUIPMENT (e.g. impedance plethysmographs) or incidental to its functioning. Lower values are given for d.c. to prevent tissue necrosis with long-term application.

Copyright International Electrotechnical Commission
Provided by IHS Markit under license with IEC
No reproduction or networking permitted without license from IHS Not for Resale, 08/26/2020 19:12:41 MDT

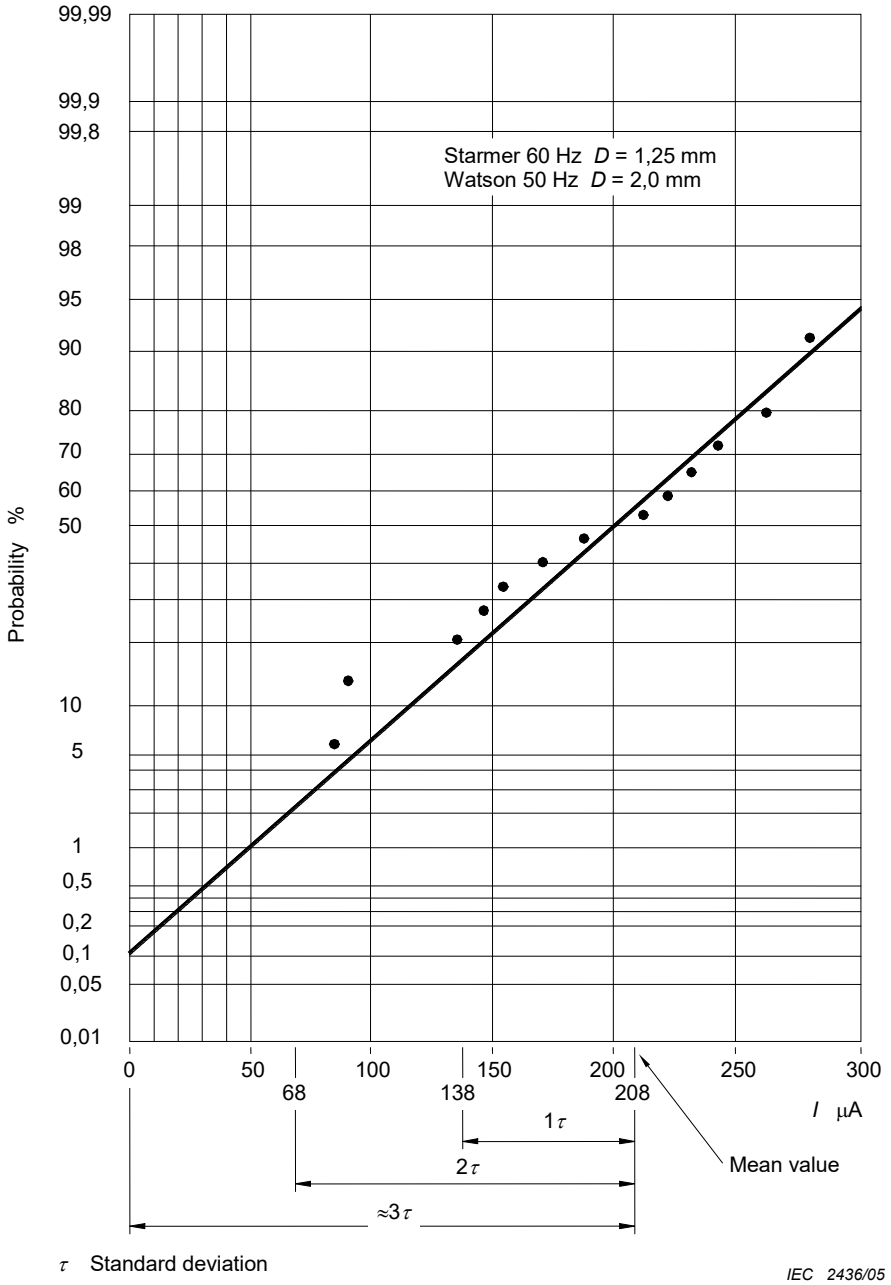

NOTE Refer to original papers by Starmer [53] and Watson [54] for interpretation of data.

Figure A.13 – Probability of ventricular fibrillation

Explanation of Figure A.14

Articles by Starmer [53] and Watson [54] provide data on ventricular fibrillation caused by 50 Hz and 60 Hz currents applied directly to the hearts of human populations with cardiac disease. Fibrillation probability was obtained as a function of the electrode diameter and the magnitude of the current. For electrodes of 1,25 mm and 2 mm diameter and currents up to 0,3 mA, the distribution appears normal. Accordingly, it has been extrapolated to encompass the values commonly used in assessing PATIENT RISK (values noted on Figure A.14). From this extrapolation, it is seen that:

– any value of current, however small, has some probability of causing ventricular fibrillation, and

– the commonly used values have low probabilities, ranging from approximately 0,002 to 0,01.

Copyright International Electrotechnical Commission
Provided by IHS Markit under license with IEC
No reproduction or networking permitted without license from IHS
Not for Resale, 08/26/2020 19:12:41 MDT

Since ventricular fibrillation is governed by many factors (PATIENT condition, probability of current entering a more sensitive area of the myocardium, probability of fibrillation as a function of current or current density, physiology, electric field, etc.), it is reasonable to use statistics in determining the possibility of RISK for the multiple conditions.

Heating effect of LEAKAGE CURRENTS

A current of 10 mA will produce no sensation of heating with a typical PATIENT CONNECTION with a contact area of the order of 1 cm^2, but a current a few times higher than this would produce a burn. The RISK of a burn depends on the magnitude of the current but not on its frequency, so the current has to be measured with a non-frequency-weighted device, such as a device similar to that shown in Figure 12 a) but without C_1 and R_1.

Subclause 8.7.3 f)

LEAKAGE CURRENTS can flow through a FUNCTIONAL EARTH CONDUCTOR. This can lead to an unexpected RISK if CLASS II equipment is combined with CLASS I equipment or with an earthed trolley, e.g. using an MSO. Although proper application of the 'rules' for assembling an ME SYSTEM would eliminate this RISK, the causal RISK can be mitigated by limiting the allowed LEAKAGE CURRENT in a FUNCTIONAL EARTH CONDUCTOR.

Subclause 8.7.4.2 – Measuring supply circuits

For correct results of LEAKAGE CURRENT measurements, it is essential to have a common reference point within the measuring circuit. The point also has to be electrically referenced to all parts of the circuit. Also the measured LEAKAGE CURRENT could be different according to the particular supply configuration. For example, if ME EQUIPMENT that is specified for connection to a supply having one side at earth potential is connected instead to a supply having two symmetrical phases (such as a 230 V supply in the USA) the measured LEAKAGE CURRENT will be much lower than the worst case. If the installed SUPPLY MAINS of the room where the measurements are made does not represent the worst case, a specific supply circuit has to be established. This can be done by using an isolating transformer with the appropriate point in the SECONDARY CIRCUIT connected to the reference point. Accurate and reproducible results when making LEAKAGE CURRENT measurements can also be obtained without an isolating transformer. However this would depend on the quality of the SUPPLY MAINS used for the measurements. Factors that need to be considered would include transients, interference signals and voltage differences between neutral and earth in the measuring circuit.

The earth symbols in the figures represent this common reference point, which is not connected to the protective earth of the SUPPLY MAINS. Such a separate reference point can provide additional protection for the person carrying out the measurements.

A variable-voltage transformer is necessary to provide 110 % of the RATED supply voltage to the ME EQUIPMENT. Although it would be possible to test with the MAINS VOLTAGE normally present in the test room and to multiply the measured LEAKAGE CURRENT values by the appropriate factor, this would not always produce the same result as testing with 110 % of the RATED supply voltage, particularly with ME EQUIPMENT that includes a switched-mode power supply.

The switches S_1 or $S_1 + S_2$ or $S_1 + S_2 + S_3$ in Figure F.1 to Figure F.4 (inclusive) can be omitted and the interruptions of the relevant leads can be obtained by other means.

Instead of the single or polyphase isolating transformers with adjustable output voltage(s), as shown in Figure F.1 to Figure F.5 (inclusive), a combination of an isolating transformer with set output voltage and an auto-transformer with adjustable output voltage can be used.

Subclause 8.7.4.3 – Connection to the measuring supply circuit

Although it is not unlikely that ME EQUIPMENT is used while placed on or in an earthed metal environment, such a position would be rather difficult to describe in a way that test results would become reproducible. The advice in the note in 8.7.4.3 d) 1) is therefore to be considered as a convention.

Copyright International Electrotechnical Commission
Provided by IHS Markit under license with IEC
No reproduction or networking permitted without license from IHS Not for Resale, 08/26/2020 19:12:41 MDT

The fact that PATIENT cables can have a significant capacitance to earth is usually important and of considerable influence on test results. A position providing reproducible results is therefore prescribed.

The isolation transformer in the measuring supply circuit provides additional protection for the person making the measurements and increases the accuracy of the LEAKAGE CURRENT measurements. However, it is not absolutely necessary to use an isolating transformer when making LEAKAGE CURRENT measurements. In some cases, such as high input power ME EQUIPMENT and ME SYSTEMS, use of an insolating transformer is not feasible. When making LEAKAGE CUURENT measurement without an isolating transformer, the MANUFACTURER needs to consider the following:

– is it possible to extrapolate the LEAKAGE CURRENTS at 110 % of the RATED supply voltage;
– the influence of currents that are driven by voltage differences between the protective earth and the mains supply neutral of ME EQUIPMENT or for ME SYSTEMS with multiple PROTECTIVE EARTH CONNECTIONS.

Measuring without an isolation transformer can produce LEAKAGE CURRENT readings that are greater than the LEAKAGE CURRENT measurement with an isolating transformer.

Subclause 8.7.4.5 – Measurement of EARTH LEAKAGE CURRENT and current in FUNCTIONAL EARTH CONNECTION

The measuring device represents a measuring method that takes into account the physiological effect of a current through the human body, including the heart, as well as the possibility of a low impedance contact between a PATIENT CONNECTION and the PATIENT. Although IEC 60990 [20] specifies some measuring devices for general use, none of these would be appropriate for measuring PATIENT LEAKAGE CURRENT. As the measuring device of the second edition is being retained for that purpose, it is most convenient to use the same device for all LEAKAGE CURRENT measurements, apart from the measurement of currents or current components with frequencies exceeding 1 kHz in relation to the 10 mA limit specified in 8.7.3 d).

Subclause 8.7.4.6 – Measurement of the TOUCH CURRENT

Where metal foil is to be applied to an ENCLOSURE made of insulating material, intimate contact can be achieved by pressing the foil against the insulating material with a pressure of approximately 5 kPa (0,5 N/cm^2).

Subclause 8.7.4.7 – Measurement of PATIENT LEAKAGE CURRENT

Subclause 8.7.4.7 b)

This test confirms that the separation between the PATIENT CONNECTIONS and other parts is adequate to limit the PATIENT LEAKAGE CURRENT to the allowed value when an external voltage is present.

If the APPLIED PART can be disconnected from the ME EQUIPMENT, it is possible that the contacts of its connector could touch an earthed object, but that situation is covered by thetests of 8.5.2.3, not by 8.7.4.7 b), which applies to the ME EQUIPMENT and the APPLIED PART together.

The 20 cm × 10 cm metal foil represents the size of a human hand. For some ME EQUIPMENT, the area of contact is greater then the size of the hand. In this case, the size of the foil can be increased.

Subclause 8.7.4.7 c)

Some of the tests specified in the second edition of this standard related to the possible presence of MAINS VOLTAGE on a SIGNAL INPUT PART or a SIGNAL OUTPUT PART (as defined in that edition, now covered by the combined term SIGNAL INPUT/OUTPUT PART). There were various exclusions, but if none of the exclusions applied this condition was regarded as a SINGLE FAULT CONDITION. The assumption made in this third edition is that, if the ACCOMPANYING DOCUMENTS place no restrictions on what other equipment is allowed to be

Copyright International Electrotechnical Commission
Provided by IHS Markit under license with IEC
No reproduction or networking permitted without license from IHS Not for Resale, 08/26/2020 19:12:41 MDT

connected to the SIGNAL INPUT/OUTPUT PART, the presence of the MAXIMUM MAINS VOLTAGE should be regarded as a NORMAL CONDITION.

Instead of an isolating transformer T_2 with an adjustable output voltage, a combination of an isolating transformer with a set output voltage and an auto-transformer with an adjustable output voltage can be used.

Subclause 8.7.4.7 d)

The test with an external voltage applied to unearthed metal ACCESSIBLE PARTS reflects the requirement in 8.5.2.2 for isolation between such parts and unearthed PATIENT CONNECTIONS of TYPE B APPLIED PARTS.

For TYPE BF APPLIED PARTS this test applies as well as the test of 8.7.4.7 b), even though both test the isolation between the PATIENT CONNECTIONS and other parts, because the PATIENT LEAKAGE CURRENT might not be the same in these two situations and different limit values apply.

Instead of an isolating transformer T_2 with an adjustable output voltage, a combination of an isolating transformer with a set output voltage and an auto-transformer with an adjustable output voltage can be used.

Care should be taken that the capacitance of the measuring device and its connecting leads to earth and to the body of the ME EQUIPMENT is kept as low as possible.

As explained in the rationale to 8.7.3, the presence of the MAXIMUM MAINS VOLTAGE on a PATIENT represents a worst case, this is more severe than is likely to arise in practice, and the allowable PATIENT LEAKAGE CURRENT for a TYPE BF APPLIED PART in this situation is 5 mA. It was pointed out that the application of MAINS VOLTAGE to an unearthed ACCESSIBLE PART could therefore cause a PATIENT LEAKAGE CURRENT of up to 5 mA to flow from the PATIENT CONNECTIONS of a TYPE BF APPLIED PART; whereas in the same situation a TYPE B APPLIED PART (which in general offers a lower level of safety) was allowed only 500 μA. In order to resolve this anomaly, the test of 8.7.4.7 d), with 110 % of the MAXIMUM MAINS VOLTAGE on unearthed ACCESSIBLE PARTS, also applies to TYPE BF APPLIED PARTS, and in this condition the allowable PATIENT LEAKAGE CURRENT is the general 500 μA value for SINGLE FAULT CONDITION.

There is no need to perform the test of 8.7.4.7 d) on TYPE CF APPLIED PARTS because for these the same allowable value of 50 μA would apply as in the test of 8.7.4.7 b).

Subclause 8.7.4.7 h)

The requirement represents a compromise between requiring extensive testing, which with most ME EQUIPMENT would yield no useful information, and having no specific requirement to address this RISK.

Most TYPE B APPLIED PARTS are earthed, so the measurement according to 8.7.4.7 g) (all PATIENT CONNECTIONS of a single function connected directly together) will give the same result as the measurement according to 8.7.4.7 h) (all PATIENT CONNECTIONS of all APPLIED PARTS of the same type connected together). If this is within the PATIENT LEAKAGE CURRENT limit it will certainly be within the total PATIENT LEAKAGE CURRENT limit. However it is possible to have TYPE B APPLIED PARTS that are not directly earthed, and in that case the measured values can be different.

Subclause 8.7.4.9 – ME EQUIPMENT with multiple PATIENT CONNECTIONS

This requirement was introduced in the second amendment to the second edition of this standard. It addresses a RISK that can arise, for example, with equipment for measuring physiological signals where an amplifier drives one electrode to reduce common-mode interference. If one of the sensing electrodes is disconnected from the PATIENT and picks up a large voltage at mains frequency, the amplifier could drive a large current into the PATIENT in a vain attempt to cancel the interference.

--`,,```,,,,````-`-`,,`,,`,`,,`---

Copyright International Electrotechnical Commission
Provided by IHS Markit under license with IEC
No reproduction or networking permitted without license from IHS Not for Resale, 08/26/2020 19:12:41 MDT

The requirement represents a compromise between requiring extensive testing, which with most ME EQUIPMENT would yield no useful information, and having no specific requirement to address this RISK.

Subsequently IEC 60601-2-49:2001 [16] introduced a comprehensive set of tests, to be performed on all equipment within the scope of that standard. These include measurement of what is termed "PART LEAKAGE CURRENT" in that standard: this is the current flowing between the PATIENT CONNECTIONS of one function and the PATIENT CONNECTIONS of other function(s), which is covered in this edition of the general standard by the revised definition of PATIENT AUXILIARY CURRENT.

Consideration was given to incorporating these tests in this general standard, but it was decided that such specific testing should be left to particular standards. The scenarios to which they relate, such as having the PATIENT CONNECTIONS of one function in use and connected to the PATIENT while the PATIENT CONNECTIONS of another function are not in use and could make contact with earth or other objects, are likely to arise with multifunction PATIENT monitoring equipment but unlikely with most other kinds of ME EQUIPMENT.

Figure A.15, based on Figure KK.101 of IEC 60601-2-49:2001 [16], shows an example of measuring the PATIENT LEAKAGE CURRENT from one function of a TYPE BF APPLIED PART while the PATIENT CONNECTIONS of another function of the same APPLIED PART and of two TYPE CF APPLIED PARTS are either floating or earthed.

Subclause 8.8.1 – General

Care should be taken that the voltage applied to a REINFORCED INSULATION does not overstress either of the MEANS OF PROTECTION in the ME EQUIPMENT. If there are multiple paths between the same points, these might need to be tested separately. There could, for example, be one path from the MAINS PART to a PATIENT CONNECTION that has BASIC INSULATION plus a PROTECTIVE EARTH CONNECTION plus PATIENT CONNECTIONS isolation as required by 8.5.2.1, and a parallel path having REINFORCED INSULATION. ME EQUIPMENT parts might need to be disconnected to allow the REINFORCED INSULATION to be tested without overstressing the separate insulation of the MAINS PART or the PATIENT CONNECTIONS.

This could be avoided, for example in the case of a transformer, by the use of a voltage divider with a tapping point connected to the core or some other suitable connecting point to ensure the correct voltage division over the actual insulations, or by the use of two test transformers, correctly phased.

--`,,```,,,,````-`-`,,`,,`,`,,`---
Copyright International Electrotechnical Commission
Provided by IHS Markit under license with IEC
No reproduction or networking permitted without license from IHS Not for Resale, 08/26/2020 19:12:41 MDT

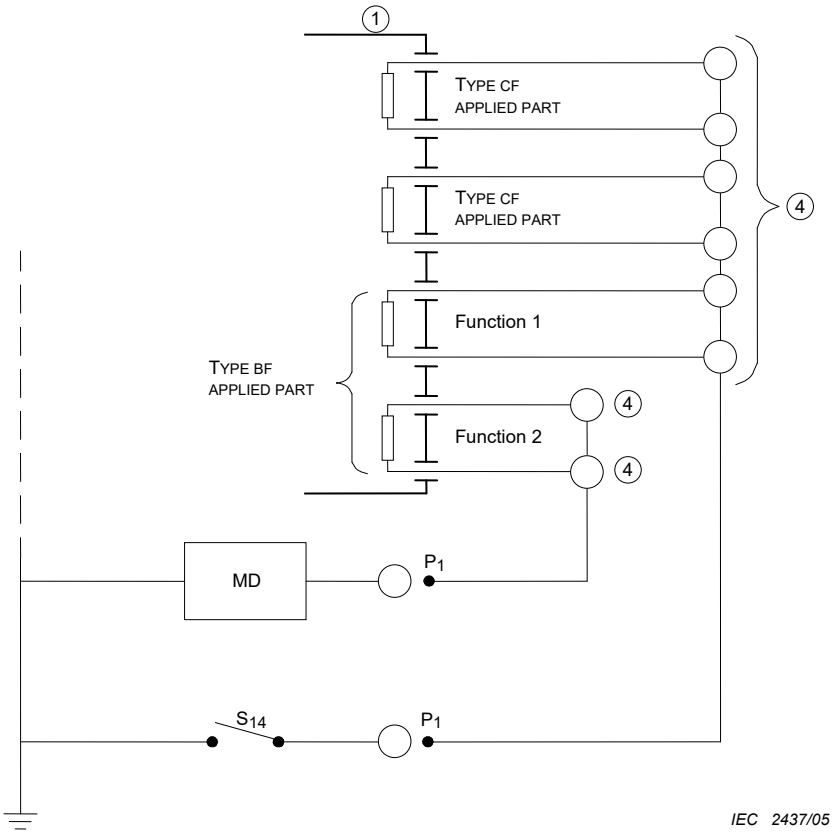

For legends, see Table 5.

Key

All measurements are made with S_{14} closed and again with S_{14} open.

Figure A.14 – Example of a measuring circuit for the PATIENT LEAKAGE CURRENT from a PATIENT CONNECTION to earth for ME EQUIPMENT with multiple PATIENT CONNECTIONS

Subclause 8.8.2 – Distance through solid insulation or use of thin sheet material

The second edition of this standard placed no restrictions on the thickness of solid insulation, except as specified in 57.9.4 e) for transformers and for the need for all insulation covered by Clause 20 to be thick enough to pass the dielectric strength test. A very thin film of insulating material might pass that test but might not provide reliable insulation during the EXPECTED SERVICE LIFE of all production items.

Some National Committee comments during the development of this edition proposed introducing relevant requirements derived from IEC 60950-1 to address this omission. Both WG 14 (Testing) and WG 16 (Electrical hazards) recommended accepting these proposals.

These requirements have been included in IEC 60950-1 for many years without causing problems. They should not be onerous in practice for ME EQUIPMENT, and indeed most ME EQUIPMENT designed according to the previous editions of this standard would have satisfied them.

The requirements that have been introduced are intended to be technically equivalent to those of IEC 60950-1:2005, but the editorial structure has been changed for clarity, as follows.

– IEC 60950-1:2005 specifies a general requirement for distance through insulation, with an exception for voltages up to 71 V. This has been changed to state explicitly that the requirement applies above 71 V.

--`,,```,,,,````-`-`,,`,,`,`,,`---

Copyright International Electrotechnical Commission
Provided by IHS Markit under license with IEC
No reproduction or networking permitted without license from IHS
Not for Resale, 08/26/2020 19:12:41 MDT

– IEC 60950-1:2005 specifies an exception from the requirement for distance through insulation where the requirements for thin sheet material apply, as set out in another subclause, but that subclause does not refer explicitly to the 71 V limit. This has been made explicit by stating the requirements for thin sheet material as an alternative to the thickness requirement, under the same introductory wording.

– IEC 60950-1:2005 specifies that “Insulation in thin sheet materials is permitted . . provided that” certain conditions are satisfied. This has been changed to an explicit requirement that insulation in thin sheet materials needs to satisfy these conditions.

– IEC 60950-1:2005 requires that insulation in thin sheet materials “is used within the equipment ENCLOSURE”. However the ENCLOSURE as defined in this standard includes all outer surfaces, including the surfaces of cables, APPLIED PARTS, etc. The requirement has therefore been rephrased.

Elsewhere in this standard the terms SUPPLEMENTARY INSULATION and REINFORCED INSULATION have mostly been replaced by references to MEANS OF PROTECTION, but they have been retained here because, as in IEC 60950-1:2005, the requirements concerning distance through insulation and the use of thin sheet material apply to SUPPLEMENTARY INSULATION and to REINFORCED INSULATION, but not to BASIC INSULATION. Thus these requirements do not apply where BASIC INSULATION, as one MEANS OF PROTECTION, is used in conjunction with a PROTECTIVE EARTH CONNECTION as the other MEANS OF PROTECTION. Where DOUBLE INSULATION is used, these requirements apply to whichever constituent part thereof is regarded as the SUPPLEMENTARY INSULATION.

Subclause 8.8.3 – Dielectric strength

Components designed to limit the voltage might need to be removed in order to allow the full test voltage to be applied to the insulation being tested.

The purpose of this test is to check all solid insulation under the worst-case condition after having achieved operating temperature. For heating elements, the worst case is achieved with heaters remaining energized during measurement.

The test voltages specified are appropriate for solid insulation only. Spacings (CREEPAGE DISTANCES and CLEARANCES) are evaluated by 8.9. IEC 60664-1 gives details of electrical test methods for clearances using impulse voltage dielectric strength tests. These tests can be used under the IEC 60950-1 route for MOOPs, but are not specified for MOPPs. IEC 60664-1 states that the 2U + 1 000 V type of dielectric strength test “is not relevant for the testing of clearances”.

Since the dielectric strength test is applied immediately after the humidity preconditioning treatment, with the ME EQUIPMENT still in the humidity cabinet, adequate precautions for the protection of laboratory personnel could be necessary.

In Table 6, the values for OPERATOR protection are taken from IEC 60950-1:2005 and the values for PATIENT protection are taken from the second edition of IEC 60601-1. In constructing the table, three principles were employed:

– MOPP are always at a higher value than MOOP.

– Mains circuits are effected by transient overvoltages as detailed in Table 10. In SECONDARY CIRCUITS, the transient overvoltage level is at least one level less than the mains circuits.

– The value of test voltage is primarily determined by the transient voltage on the SUPPLY MAINS which is usually orders of magnitude larger than the WORKING VOLTAGE.

In order to align with the second edition of IEC 60601-1 for the common WORKING VOLTAGE of 220 V r.m.s to 240 V r.m.s. the test voltage of 4 000 V r.m.s. was retained even though this value is more that twice the test voltage for one MOPP. However, each individual MOPP has to meet the 1 500 V r.m.s. minimum requirement.

Copyright International Electrotechnical Commission
Provided by IHS Markit under license with IEC
No reproduction or networking permitted without license from IHS Not for Resale, 08/26/2020 19:12:41 MDT

Information regarding the incorporation of requirements from IEC 62368-1:2018 in Amendment 2:

According to IEC 62368-1:2018, the minimum dielectric strength requirement for mains operated equipment with a mains supply voltage up to and including 250 V r.m.s for REINFORCED INSULATION (2 MOOP) is 4 kV (IEC 62368-1:2018, Table 27). Table 6 was analyzed, and it was determined that a WORKING VOLTAGE (peak or d.c.) up to 1 293 V requires a dielectric strength test of less than or equal to 4 kV peak for 1 MOPP.

According to IEC 62368-1:2018, the minimum dielectric strength requirement for mains operated equipment with a mains supply voltage above 250 V r.m.s up to and including 600 V r.m.s. for REINFORCED INSULATION (2 MOOP) IS 5 kV (IEC 62368-1:2018, Table 27). Table 6 was analyzed, and it was determined that a WORKING VOLTAGE (peak or d.c.) up to 2 172 V requires a dielectric strength test of less than or equal to 5 kV peak for 1 MOPP.

For higher PEAK WORKING VOLTAGES, information regarding the equipment/sub-assembly/component that was tested according to IEC 62368-1:2018 needs to be reviewed to determine if the applied electric strength test (IEC 62368-1:2018, Table 25 to Table 27 (inclusive)) for REINFORCED INSULATION meets the minimum requirement from Table 6 if 1 MOPP is necessary.

A direct comparison between the requirements of this standard and IEC 62368-1:2018 for dielectric strength (electric strength is the term used in IEC 62368-1:2018) is not possible without knowing the reference “voltage”. The “voltage” is either the expected transient voltage (IEC 62368-1:2018, Table 25), peak of the working voltage and recurring peak voltages (IEC 62368-1:2018, Table 26) or the temporary overvoltage (IEC 62368-1:2018, Table 27). Knowing these voltages allows the values from each table to be determined, the requirement applied is the highest value from the three tables; but for equipment connected to a nominal SUPPLY MAINS system up to and including 250 V r.m.s., the minimum test voltage will be 4 kV peak and for a nominal SUPPLY MAINS system voltage above 250 V r.m.s up to and including 600 V r.m.s. the minimum test voltage will be 5 kV peak.

Subclause 8.8.3 a)

The test voltage can be provided by a transformer, by a d.c. power source or by using the transformer(s) of the ME EQUIPMENT. In the last case, to prevent overheating, the test voltage can have a frequency that is higher than the RATED frequency of the ME EQUIPMENT.

The PROCEDURE and duration of the test for WORKING VOLTAGE equal to or higher than 1 000 V a.c. or 1 500 V d.c. or peak values can be specified further by particular standards.

Subclause 8.8.4.1 – Mechanical strength and resistance to heat

Tests concerning flammability of materials will be found in IEC 60695-11-10.

Subclause 8.9 – CREEPAGE DISTANCES and AIR CLEARANCES

For ME EQUIPMENT intended to be supplied from the SUPPLY MAINS, AIR CLEARANCE and dielectric strength requirements are based on the expected overvoltage transients that could enter the equipment from the SUPPLY MAINS. According to IEC 60664-1, the magnitude of these transients is determined by the normal supply voltage and the supply arrangements. These transients are categorized according to IEC 60664-1 into four groups called overvoltage categories I to IV (also known as installation categories I to IV). Elsewhere in this standard overvoltage category II is assumed.

The design of solid insulation and AIR CLEARANCES should be co-ordinated in such a way that, if an incident overvoltage transient exceeds the limits of overvoltage category II, the solid insulation can withstand a higher voltage than the AIR CLEARANCES.

The values in Table 13 to Table 15 correspond to those of IEC 60950-1:2005 for overvoltage category II for MAINS PARTS and overvoltage category I for SECONDARY CIRCUITS. If

Copyright International Electrotechnical Commission
Provided by IHS Markit under license with IEC
No reproduction or networking permitted without license from IHS Not for Resale, 08/26/2020 19:12:41 MDT

ME EQUIPMENT is intended to be used in locations where the SUPPLY MAINS is in overvoltage category III or IV, these values will be inadequate.

A SECONDARY CIRCUIT derived from a SUPPLY MAINS will normally be overvoltage category I if the SUPPLY MAINS is overvoltage category II; the maximum transients for various SUPPLY MAINS voltages in overvoltage category I are shown in the column headings of Table 13.

For insulation between the ENCLOSURE and the PATIENT CONNECTION of an F-TYPE APPLIED PART special rules apply:

1) In the case of an F-TYPE APPLIED PART containing no voltage difference, the insulation between the PATIENT CONNECTIONS and the ENCLOSURE will only be stressed to the MAINS VOLTAGE in the case of a fault in other equipment connected to the PATIENT.

   This condition rarely occurs; furthermore this insulation is not normally subject to the transient overvoltages found in the MAINS PART. In view of the above, the insulation necessary between the APPLIED PART and the ENCLOSURE for the case quoted, need only satisfy the requirements for BASIC INSULATION.

2) In the case of an F-TYPE APPLIED PART containing parts with voltage difference, the connection of a PATIENT CONNECTION to earth via an earthed PATIENT (NORMAL CONDITION) could subject the insulation between other parts and the ENCLOSURE to the whole of the voltage within the APPLIED PART.

   Since this voltage appears in NORMAL CONDITION, even though infrequently, the relevant insulation should satisfy the requirements for DOUBLE INSULATION or REINFORCED INSULATION.

3) The value to be applied is the highest of the values found according to Items 1) and 2) above.

In the absence of a theoretical background to refer to, it was decided that the values above 1 000 V would be drawn from Table 7 of IEC 61010-1:2001 [22] for CREEPAGE DISTANCES using the column for material group IIIa-b, pollution degree 3, which correlates with the existing values in the second edition of IEC 60601-1 or is slightly more onerous. For AIR CLEARANCES, the values have been estimated based on the relationship between creepage and clearance for values below 1 000 V r.m.s. from Table 12. These derived values are shown in Table A.1.

Table 16 of the second edition of IEC 60601-1 was split into five tables in this standard (Table 12 to Table 16 inclusive). To align it with tables derived from other standards such as IEC 60950-1, the factor between the a.c. voltages and the d.c. voltages was changed from 1,2 to about 1,4. This relaxation was accepted as it is a common approach in other standards and it prevents having different CREEPAGE DISTANCES or AIR CLEARANCES in circuits where there is a d.c. voltage rectified from an a.c. voltage.

Copyright International Electrotechnical Commission
Provided by IHS Markit under license with IEC
No reproduction or networking permitted without license from IHS Not for Resale, 08/26/2020 19:12:41 MDT

Table A.1 – Values of AIR CLEARANCE and CREEPAGE DISTANCE derived from Table 7 of IEC 61010-1:2001 and Table 12

WORKING VOLTAGE V d.c. up to and including	WORKING VOLTAGE V r.m.s up to and including	Spacing providing one MEANS OF PATIENT PROTECTION		Spacing providing two MEANS OF PATIENT PROTECTION	
		AIR CLEARANCE mm	CREEPAGE DISTANCE mm	AIR CLEARANCE mm	CREEPAGE DISTANCE mm
1 500	1 250	11,5	20	23,0	40
1 920	1 600	14,5	25	29,0	50
2 400	2 000	18,5	32	37,0	64
3 000	2 500	23,0	40	46,0	80
3 840	3 200	29,0	50	58,0	100
4 800	4 000	36,0	63	72,0	126
6 000	5 000	46,0	80	92,0	160
7 560	6 300	57,0	100	114,0	200
9 600	8 000	71,5	125	143,0	250
12 000	10 000	91,5	160	183,0	320

Table A.2 contains CREEPAGE DISTANCES for WORKING VOLTAGE above 1 000 V derived from IEC 60664-1:2007, Table F.4.

Subclause 8.9.1 – Values

When using the values of CREEPAGE DISTANCE and AIR CLEARANCE, it should be noted that peak, d.c. and r.m.s. values are all used. It is important to read the tables carefully.

The tables for MOOPs use values from IEC 60950-1:2005 representing the following basic principles, taken from IEC 60664-1:

– "The basis for the determination of a CREEPAGE DISTANCE is the long-term r.m.s. value of the voltage existing across it."

– "AIR CLEARANCES shall be dimensioned to withstand the required impulse withstand voltage". Impulse withstand voltage is the "highest peak value of withstand voltage …."

However, the tables for MOPPs are taken from the second edition of IEC 60601-1, where both creepages and clearances were related to r.m.s. or d.c. voltages.

Copyright International Electrotechnical Commission
Provided by IHS Markit under license with IEC
No reproduction or networking permitted without license from IHS Not for Resale, 08/26/2020 19:12:41 MDT

Table A.2 – CREEPAGE DISTANCES to avoid failure due to tracking from IEC 60664-1

WORKING VOLTAGE V r.m.s or d.c.	Spacing for one MEANS OF OPERATOR PROTECTION						
	Pollution degree 1	Pollution degree 2			Pollution degree 3		
	Material group	Material group			Material group		
	I, II, IIIa, IIIb	I	II	IIIa or IIIb	I	II	IIIa or IIIb
1 250	Use the AIR CLEARANCE from the appropriate table	6,3	9,0	12,5	16,0	18,0	20,0
1 600		8,0	11,0	16,0	20,0	22,0	25,0
2 000		10,0	14,0	20,0	25,0	28,0	32,0
2 500		12,5	18,0	25,0	32,0	36,0	40,0
3 200		16,0	22,0	32,0	40,0	45,0	50,0
4 000		20,0	28,0	40,0	50,0	56,0	63,0
5 000		25,0	36,0	50,0	63,0	71,0	80,0
6 300		32,0	45,0	63,0	80,0	90,0	100,0
8 000		40,0	56,0	80,0	100,0	110,0	125,0
10 000		50,0	71,0	100,0	125,0	140,0	160,0

Subclause 8.9.1.2 – CREEPAGE DISTANCES and AIR CLEARANCES complying with IEC 60950-1 or IEC 62368-1

During the review of the differences between the requirements of this standard and IEC 62368-1:2018 a scenario was identified where the AIR CLEARANCE values required by IEC 62368-1:2018 could be significantly lower than the values currently required by this standard for MOOP. It was determined that this scenario would lead to AIR CLEARANCE values that are too small for ME EQUIPMENT and that sub-assemblies/components utilizing this construction would not be acceptable as part of ME EQUIPMENT.

This scenario is specific to sub-assemblies/components specifically designed for use with a SUPPLY MAINS that is free from transient voltages. For example, a d.c. power supply in an ambulance that is used to generate a 240 V r.m.s. supply voltage (transient free). In this example, following the requirements from IEC 62368-1:2018, Table 10 and Table 14 (Procedure 1 and Procedure 2) would give the required AIR CLEARANCE of 0,4 mm due to the nature of the supply (transient free).

IEC 60601-1 applies the same requirements to SUPPLY MAINS regardless of the existence of transient overvoltages in the SUPPLY MAINS. In this scenario the requirement for AIR CLEARANCE for 2 MOOP would be 4,0 mm for primary circuits (Table 13, Row 2). Given the large difference in requirements, it has been determined that sub-assemblies/components designed specifically for use in transient-free SUPPLY MAINS that have been evaluated for compliance with IEC 62368-1:2018 alone would not be acceptable and the requirements of Table 12 to Table 16 (inclusive) would additionally apply.

It is acknowledged that the probability of a sub-assembly/component being designed specifically for this application is likely to be low. Additionally, any sub-assembly/component (e.g. power supply) that was intended for a traditional SUPPLY MAINS connection would meet the higher requirements based on the transient voltage or temporary overvoltage and would be acceptable.

--`,,```,,,,````-`-`,,`,,`,`,,`---
Copyright International Electrotechnical Commission
Provided by IHS Markit under license with IEC
No reproduction or networking permitted without license from IHS
Not for Resale, 08/26/2020 19:12:41 MDT

Subclause 8.9.1.6 – Interpolation

Interpolation for CREEPAGE DISTANCES but not for AIR CLEARANCES is allowed, except where the WORKING VOLTAGE is above 2 kV r.m.s. or 2,8 kV d.c. This approach is generally consistent with IEC 60950-1 and IEC 61010-1 [22].

Subclause 8.9.1.15 – CREEPAGE DISTANCES and AIR CLEARANCES for DEFIBRILLATION-PROOF APPLIED PARTS

From IEC 60664-1:2007, Table F.2, a distance of 4 mm is adequate for pulses of 5 kV having a short duration of less than 10 ms, such voltages arising typically from the use of a defibrillator.

Subclause 8.9.2 – Application

Subclause 8.9.2 a)

Depending on the INTENDED USE of the ME EQUIPMENT, operation of the fuse or OVER-CURRENT RELEASE can be a HAZARD. The opening of a branch circuit breaker is not acceptable. Subclause 8.9.2 a) is based on the fact that there is an over-current device in the input of the ME EQUIPMENT before the part of the circuit where this subclause is applied. Before this over-current device, the spacings need to comply with the basic requirement for parts of opposite polarity within the MAINS PART.

Subclause 8.9.3 – Spaces filled by insulating compound

CREEPAGE DISTANCES are measured through the joint between two parts of an insulation barrier, except for cemented joints, i.e. those in which:

– either the two parts forming the joint are bonded by heat sealing or other similar means at the place where this is of importance;

– or the joint is completely filled with adhesive at the necessary places and the adhesive bonds to the surfaces of the insulating barrier so that humidity cannot be sucked into the joint.

In the second edition of this standard, the captions to Figures 43 to 45 referred to “uncemented joints.” Item 7 of the legends to these figures referred to 57.9.4 f), second dash, “for a description of cemented joints” but did not specify any test methods other than inspection. During the preparation of this edition, it was proposed to introduce relevant requirements derived from IEC 60950-1:2005 to address the related subject of potting.

The requirements that have been introduced are closely based on those of IEC 60950-1:2005 and cover potting, encapsulation, cemented joints, etc. The editorial structure has been somewhat revised from that of IEC 60950-1:2005 for clarity. These requirements have been included in 8.9 rather than 8.8 because they specify circumstances that allow exemption from the requirements for CREEPAGE DISTANCES and AIR CLEARANCES, rather than additional requirements applying to solid insulation.

Subclause 8.9.4 – Measurement of CREEPAGE DISTANCES AND AIR CLEARANCES

Narrow gaps, running in the direction of a possible creepage path and being some tenths of 1 mm wide only, should be avoided as far as possible, for dirt and moisture can deposit there.

Subclauses 8.10.1 – Fixing of components

In many cases it will be obvious that components and wiring are adequately secured (e.g. small components soldered to a printed circuit board) without the need for specific justification in the RISK MANAGEMENT FILE; but if any relevant information is included in the RISK MANAGEMENT FILE, it should be taken into account in assessing compliance with these requirements.

Subclause 8.10.2 – Fixing of wiring

--`,,```,,,,````-`-`,,`,,`,`,,`---

Copyright International Electrotechnical Commission
Provided by IHS Markit under license with IEC
No reproduction or networking permitted without license from IHS Not for Resale, 08/26/2020 19:12:41 MDT

It is generally accepted that wiring connections are subject to the SINGLE FAULT CONDITION. That is those having only one means of being secured that would prevent a loosened/broken wire from resulting in a HAZARDOUS SITUATION, such as removing a PROTECTIVE EARTH CONNECTION or bridging a MEANS OF PROTECTION, are considered not in compliance.

Examples of connection that could comply with SINGLE FAULT CONDITION are:

– double crimping of both the wire and the wire insulation;
– mechanical security of the wire and soldering;
– mechanical security of the wire and wire movement restraints such as tie wraps, wire clamps, bundling straps, etc.;
– strain relief mechanisms and mechanical security.

Subclause 8.10.4 – Cord-connected HAND-HELD parts and cord-connected foot-operated control devices

HAND-HELD switches and footswitches are in practice exposed to severe conditions. This requirement ensures that even in the worst case, where the ENCLOSURE of such a switch is completely broken, only parts at voltages within the limits specified in 8.4.2 c), which are safe to touch, can become exposed.

Subclause 8.10.5 – Mechanical protection of wiring

There is no requirement for specific justification to be given in the RISK MANAGEMENT FILE, but if any relevant information is included in the RISK MANAGEMENT FILE it should be taken into account in assessing compliance with these requirements.

Subclause 8.10.7 – Insulation of internal wiring

Conductors can be routed in separated jacketed cords of adequate rating. Where conductors of different circuit categories have to be run through common cords, wiring channels, conduits or connecting devices, adequate separation is realized by sufficient rating of the conductor insulation and by arranging for sufficient AIR CLEARANCES and CREEPAGE DISTANCES, complying with the requirements of 8.9, between conductive parts in connecting devices.

Subclause 8.11.1 – Isolation from the SUPPLY MAINS

Subclause 8.11.1 a)

Skilled persons, such as SERVICE PERSONNEL, who need to gain access to internal, possibly hazardous, ME EQUIPMENT parts, need a means by which the ME EQUIPMENT can be isolated from the SUPPLY MAINS.

A mains isolating switch, where provided, could also serve as a functional off switch for routine use or for disabling hazardous output in an emergency. However it does not necessarily serve these purposes, nor does this standard specify any general requirement for an emergency off switch.

Subclause 8.11.1 c)

In the second edition of this standard, the requirement for minimum contact spacing of switches used to provide isolation from the SUPPLY MAINS was specified in IEC Publication 328. IEC 61058-1 superseded IEC 328 in 1990. The first edition of IEC 61058-1 required 3 mm contact spacing for full disconnection from the SUPPLY MAINS. No mention of overvoltage category was made. The third edition of IEC 61058-1 introduced the concept of overvoltage category according to IEC 60664-1. For a 230 V SUPPLY MAINS in overvoltage category II, Table 22 of IEC 61058-1:2000 allows a minimum contact spacing of 1,5 mm. While the requirements in this standard generally relate to overvoltage category II (see 8.9.1.11), it was thought prudent to stay with the 3 mm requirement associated with a 230 V SUPPLY MAINS IN overvoltage category III for all switches intended to provide isolation from the SUPPLY MAINS. Not only is this consistent with the requirement of the second edition of IEC 60601-1 but it is also harmonious with the requirements of IEC 60065 and IEC 60950-1, which both require a

Copyright International Electrotechnical Commission
Provided by IHS Markit under license with IEC
No reproduction or networking permitted without license from IHS Not for Resale, 08/26/2020 19:12:41 MDT

minimum contact separation of 3 mm for switches intended to provide isolation from the SUPPLY MAINS.

Subclause 8.11.1 h)

Such a protective device whether or not it caused the operation of an over-current protection device built into the ME EQUIPMENT, would be likely also to cause a fuse or circuit breaker in the installation to operate, thus removing the supply of power to other ME EQUIPMENT, possibly including life-support ME EQUIPMENT. Such a device might also cause undesirable thermal effects inside the ME EQUIPMENT and might anyway not be a reliable method of protecting against the relevant HAZARDS.

Subclause 8.11.1 i)

Parts that cannot be disconnected from the supply might include, for example, a circuit for room lighting or a circuit for remote control of the mains switch. Such parts could become accessible when a cover is opened, for example for the purpose of maintenance.

A spatially separated arrangement is one where parts that need to be accessible for servicing are located such that the SERVICE PERSONNEL are unlikely to come in contact with parts energized at voltages exceeding those specified in this standard while performing the required service. In this case, a warning is deemed to provide adequate safety for the SERVICE PERSONNEL.

Subclause 8.11.2 – MULTIPLE SOCKET-OUTLETS

This requirement reduces the probability that other equipment is connected that might lead to excessive LEAKAGE CURRENT.

Subclause 8.11.3.4 – APPLIANCE COUPLERS

A POWER SUPPLY CORD connected to a MAINS CONNECTOR is subject to similar stresses to a non-DETACHABLE POWER SUPPLY CORD. If it is not adequately protected from excessive bending, a HAZARDOUS SITUATION could result.

Subclause 8.11.3.5 – Cord anchorage

If a power cord were not adequately protected against strain and abrasion, there would be a high probability of damage to insulation providing MEANS OF PROTECTION and, with CLASS I ME EQUIPMENT, a high probability of breakage or disconnection of the PROTECTIVE EARTH CONDUCTOR.

Subclause 8.11.3.6 – Cord guards

If a power cord were not adequately protected against excessive bending, there would be a high probability of breakage of power-carrying conductors, giving a RISK of fire, and with CLASS I ME EQUIPMENT, a high probability of breakage of the PROTECTIVE EARTH CONDUCTOR.

The bending test described is identical to that specified in IEC 60950-1:2005, subclause 3.2.8. The second edition of IEC 60601-1 included the wording “Guards which fail the above dimensional test shall have to pass the test described in IEC 60335-1, Amendment 6. 1988, subclause 25.10.” This alternative has been retained, but the reference is now to a later edition of IEC 60335-1. Also the requirement to perform one test in all cases, and then to perform the other test if the ME EQUIPMENT fails the first test, has been changed to allow either test to be performed first, because this makes no difference to whether the ME EQUIPMENT complies.

Subclause 8.11.4.1 – General requirements for MAINS TERMINAL DEVICES

Mains terminals should ensure connections of sufficiently low resistance to avoid overheating and should minimise the RISK of disconnection. Reliable connection can be made by means of screws, nuts, soldering, clamping, crimping of conductors or equally effective methods.

Copyright International Electrotechnical Commission
Provided by IHS Markit under license with IEC
No reproduction or networking permitted without license from IHS Not for Resale, 08/26/2020 19:12:41 MDT

Use of terminals of components other than terminal blocks as terminals intended for external conductors is allowed in special cases where the terminal arrangement is adequate (accessible and clearly marked) and complying with this standard. The wiring terminals of certain types of components are often rated for field wiring purposes. These include fuse holders, EMC filters, circuit breakers, contactors, wiring strips, motor controllers and phase detectors. Each of these can be one of the first connected components thereby putting them in a good position to accept the first wiring connections.

Subclause 8.11.4.2 – Arrangement of MAINS TERMINAL DEVICES

Subclause 8.11.4.2 a)

One naturally expects to see all the terminals for connection of external cords or POWER SUPPLY CORDS grouped together. The possibility of an incorrect connection can increase if the terminals are not grouped together.

Subclause 8.11.4.4 – Connections to mains terminals

The term “special preparation of the conductor” covers soldering of the strands, use of cord lugs, attachment of eyelets, etc., by SERVICE PERSONNEL (i.e. in the field), but not the reshaping of the conductor before its introduction into the terminal or the twisting of a stranded conductor to consolidate the end. When preparation of the conductor is performed by the MANUFACTURER and the flexible cord is provided as the only acceptable replacement part, such part is considered to comply with this requirement.

Subclause 8.11.5 – Mains fuses and OVER-CURRENT RELEASES

Provision of fuses or OVER-CURRENT RELEASES in ME EQUIPMENT reduces the RISK that a fault in the ME EQUIPMENT will cause a protective device in the installation to operate, thus removing the supply of power to other ME EQUIPMENT, possibly including life-support ME EQUIPMENT.

It is obvious that fusing in a PROTECTIVE EARTH CONNECTION would be inappropriate.

Fusing of the neutral conductor of PERMANENTLY INSTALLED ME EQUIPMENT would serve no purpose and, with 3-phase equipment, might lead to overstressing of insulation in the event that such a fuse were to operate while the line connections remained intact. However an OVER-CURRENT RELEASE that interrupts all poles, including the neutral, simultaneously is acceptable.

The exemption for the case where DOUBLE INSULATION or REINFORCED INSULATION is present between all parts of opposite polarity within the MAINS PART was supported by the National Committees’ responses to an inquiry during the preparation of this edition. It could apply where provision of a fuse or OVER-CURRENT RELEASE would be inconvenient, for example in a small plug-in power supply.

Clause 9 – Protection against MECHANICAL HAZARDS of ME EQUIPMENT and ME SYSTEMS

Requirements in Clause 9 describe HAZARDS of a mechanical nature caused by ME EQUIPMENT (HARM caused by moving parts, by rough surfaces, by sharp edges and corners, by instability, by expelled parts, by vibration and noise and by breakdown of PATIENT supports and of suspension means for ME EQUIPMENT parts). Requirements describing HAZARDS caused by damage or deterioration of ME EQUIPMENT (mechanical strength) have been collected into 15.3.

ME EQUIPMENT can become unsafe because of parts damaged or deteriorated by mechanical stresses such as blows, pressures, shocks, vibration, by ingress of solid particles, dust, fluids and moisture and aggressive gases, by thermal and dynamic stresses, by corrosion, by loosening of fastenings of a moving part or a suspended mass, and by radiation.

Effects of mechanical overloads, material failure or wear can be avoided by:

– means that interrupt or render non-hazardous the operation or the energy supply (for example, fuses, pressure-relief valves) as soon as overloading occurs; or

Copyright International Electrotechnical Commission
Provided by IHS Markit under license with IEC
No reproduction or networking permitted without license from IHS
Not for Resale, 08/26/2020 19:12:41 MDT

– means that guard against or catch flying or falling parts (caused by material failures, wear or overload) that could constitute a MECHANICAL HAZARD.

Protection against breakdown of PATIENT supports and suspensions can be provided by redundancy or the provision of safety catches.

ME EQUIPMENT parts that are intended to be held in the hand or positioned on a bed need to be sufficiently robust to withstand a fall. They can be subject to vibration and shocks, not only when transported but also when used in vehicles.

Subclause 9.2 – MECHANICAL HAZARDS associated with moving parts

OPERATORS, PATIENTS and other people need to be protected from MECHANICAL HAZARDS. This can be achieved in a number of ways, for example:

– by providing sufficient distance between people and MECHANICAL HAZARDS;

– by restricting access to areas that present MECHANICAL HAZARDS;

– by providing a barrier, whether mechanical or non-mechanical, between people and MECHANICAL HAZARDS;

– by reducing the RISK associated with MECHANICAL HAZARDS;

– by ensuring adequate OPERATOR control over the movements causing a MECHANICAL HAZARD; or

– by providing back-up systems so that an acceptable RESIDUAL RISK is achieved when the initial control system fails.

When reference is made, in this subclause, to the RISK to persons, rather than to the PATIENT or OPERATOR, it should be noted, that there can be other people, in addition to the PATIENT or OPERATOR in the vicinity of ME EQUIPMENT. Depending upon the ME EQUIPMENT, visitors, family members and other non-qualified personnel could be in the vicinity.

Subclause 9.2.1 – General

Requirements concerning moving parts have been based on those in other standards applying to non-medical equipment and machinery, but have been modified to take account of the necessity for ME EQUIPMENT to be in contact with or very close to the PATIENT.

Due to the diversity of situations, it is not possible in this standard to dictate where the warnings to address RESIDUAL RISK should be placed. Depending on the application, and the level of RESIDUAL RISK, it could be important to place a warning on the product. It might, however, be acceptable to place the warning only in the ACCOMPANYING DOCUMENTS.

Subclause 9.2.2.4 – GUARDS and other RISK CONTROL measures

The degree of protection required for ENCLOSURES or GUARDS protecting moving parts depends upon the general design and INTENDED USE of the ME EQUIPMENT. Factors to be taken into consideration in judging the acceptability of exposed moving parts include the degree of exposure, the shape of the moving parts, the probability of occurrence of accidental contact, the speed of movement and the probability of occurrence that fingers, arms or clothing will be drawn into moving parts (for example where gears mesh, where belts travel on to a pulley or where moving parts close in a pinching or shearing action).

These factors can be considered with respect to both NORMAL USE and the setting of any adjustments, or the replacement of any ACCESSORY or attachment, possibly including the installation, because GUARDS can be provided at installation and might not be part of a single item of STATIONARY equipment.

Features of GUARDS that can be considered include:

– removable with the use of TOOLS only;

– removable for servicing and replacement;

– strength and rigidity;

Copyright International Electrotechnical Commission
Provided by IHS Markit under license with IEC
No reproduction or networking permitted without license from IHS Not for Resale, 08/26/2020 19:12:41 MDT

– completeness;

– creation of additional HAZARDS such as pinch points, and the necessity for additional handling because of the increased need for servicing such as for cleaning.

Subclause 9.2.2.5 – Continuous activation

Motion control systems with the OPERATOR in the feedback loop need to employ continuous activation (e.g. momentary contact, dead-man switch). Such factors as speed of motion and visible feedback to the OPERATOR also need to be adequate.

In some circumstances, OPERATOR training and other qualifications are necessary in order to have adequate OPERATOR control. In such cases, it could be desirable to utilize “lock out controls” that require intentional action to allow movement. Examples of such controls include:

– a key switch with an “enable” function;

– a finger print switch with an “enable” function;

– a password card.

In other circumstances, accidental control can be a concern. In this case, controls could employ such construction techniques as:

– control with an “enable” function, before any motions are possible;

– controls with recessed actuators; this could prevent movement if a hand or leg hits actuator unintentionally.

If the OPERATOR could have access to hazardous moving parts, controls could be designed which would prevent access to the TRAPPING ZONE by location of the OPERATOR controls. An example is a control system that needs two-hand activation.

For OPERATOR control systems without continuous activation, there can be an acceptable mitigation of RISKS, however it is necessary to evaluate the system to the other options in 9.2.2.1.

This clause deals with electronic motion control systems. For manually driven motion systems see other options in 9.2.2.1.

Subclause 9.2.2.6 – Speed of movement(s)

For some medical equipment there will be unavoidable HAZARDS due to moving parts.

Subclause 9.2.3 – Other MECHANICAL HAZARDS associated with moving parts

Subclause 9.2.2.1 deals with MECHANICAL HAZARDS caused by TRAPPING ZONES. Movement could result in other MECHANICAL HAZARDS, such as impact, puncture, etc.

Subclause 9.2.4 – Emergency stopping devices

Emergency stopping devices are designed to prevent accidental damage by preventing or stopping movements of ME EQUIPMENT parts. There could be more than one emergency stopping device on ME EQUIPMENT. ME EQUIPMENT can also include emergency off devices that are intended to disconnect all power to the installation. Emergency off devices are not subject to the requirements of this subclause unless they are also intended to provide the emergency stopping function. Emergency stopping devices could be only one part of the emergency switching function.

Subclause 9.2.5 – Release of PATIENT

This requirement takes account of the possible effect of a power interruption causing unwanted movements, and the likely need in that situation, for the removal of compression forces or the removal of PATIENTS from a hazardous position.

--`,,```,,,,````-`-`,,`,,`,`,,`---

Copyright International Electrotechnical Commission
Provided by IHS Markit under license with IEC
No reproduction or networking permitted without license from IHS Not for Resale, 08/26/2020 19:12:41 MDT

Subclause 9.3 – MECHANICAL HAZARD associated with surfaces, corners and edges

The RISK associated with a sharp edge depends upon the position of the sharp edge and the application of the ME EQUIPMENT. For this reason, compliance with this subclause is checked by inspection. In cases of doubt, the test for sharp edges described in UL 1439 [43], can be used as guidance.

This subclause applies for surfaces accessible during NORMAL USE. Care should be given to protecting SERVICE PERSONNEL, or other internal systems where damage could result in an unacceptable RISK (e.g. fluid systems).

Subclause 9.4 – Instability HAZARDS

In NORMAL USE, many types of ME EQUIPMENT are exposed to a variety of conditions during transport (movement from room to room during NORMAL USE). While the requirements of this standard attempt to represent those that might be encountered, the RISK MANAGEMENT PROCESS should evaluate the conditions under which the ME EQUIPMENT is intended to be used and how those conditions might impact BASIC SAFETY or ESSENTIAL PERFORMANCE.

Where failure to remain stable during the performance of these tests could cause HARM to the OPERATOR, PATIENT and other persons (e.g. from crushing or falling); or result in the ME EQUIPMENT failing to meet the applicable BASIC SAFETY requirements of this standard (such as: exposing hazardous voltages, reducing CREEPAGE DISTANCES or AIR CLEARANCES or creating breaches in fire proof ENCLOSURES which are not clearly obvious) or causing a loss of ESSENTIAL PERFORMANCE, instability should be considered to result in an unacceptable RISK.

All ME EQUIPMENT is tested for overbalance with 5° tip, 10° tip, and push in 9.4.2.1, 9.4.2.2, 9.4.2.3 a) and b). In 9.4.3.1 a), b) and c) and 9.4.3.2 a) and b), only MOBILE ME EQUIPMENT is tested as these are requirements for wheels and their brakes.

Subclause 9.4.2 – Instability – overbalance

As an aid to understanding, Table A.3 and Figure A.16 illustrate the logic behind the stability test requirements.

Table A.3 – Instability test conditions

Transport warning	Test plane angle	
	10° plane	5° plane
Transport warning not provided	Must pass in all positions	Not applicable (represented by 10° test)
Transport warning provided	Must pass in transport position (only)	Must pass in all positions except transport

--`,,```,,,,````-`-`,,`,,`,`,,`---

Copyright International Electrotechnical Commission
Provided by IHS Markit under license with IEC
No reproduction or networking permitted without license from IHS Not for Resale, 08/26/2020 19:12:41 MDT

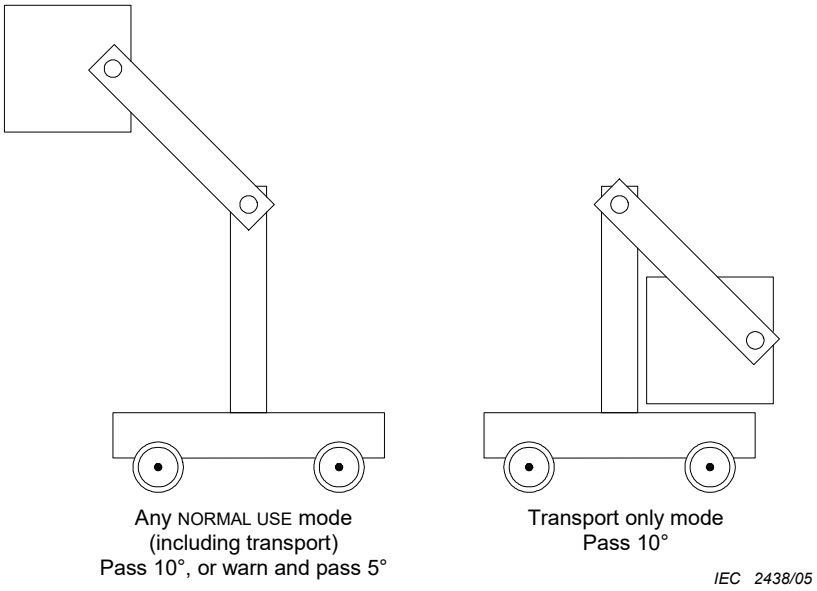

Figure A.15 – Instability test conditions

Subclause 9.4.2.3 a)

The push force of 15 % of the ME EQUIPMENT'S weight or a maximum of 150 N was selected in order to represent foreseeable misuse for typical ME EQUIPMENT, based on input from ME EQUIPMENT MANUFACTURERS. The marking option for ME EQUIPMENT that overbalances with this push force is considered something that provides medical care benefit, and with the no-pushing marking the committee presumes that the RISK would be acceptable, but the MANUFACTURER needs to make this determination based on their own analysis, which might include usability studies, including the location of the marking.

Subclause 9.4.2.4 – Castors and wheels

Compliance with this subclause is required not only to avoid obvious unacceptable RISK but also to ensure the substantially operative movement as an ESSENTIAL PERFORMANCE. MOBILE ME EQUIPMENT is defined as equipment intended to be moved from one location to another.

Subclause 9.4.2.4.3 – Movement over a threshold

The 10 mm threshold height came from the thought that cables are represented by an 8 mm to 10 mm height. The committee felt that elevator alignment is now closer to 10 mm (e.g. 4 mm) rather than 20 mm. Normally, hospitals would not have door threshold.

The manual speed of 0,8 m/s was selected from an anticipated range of 0,4 m/s to 1,5 m/s during NORMAL USE, based on input from ME EQUIPMENT MANUFACTURERS. A speed of 0,8 m/s was felt to be the most representative of NORMAL USE and normal walking speed. There's a balance between too slow a speed such that the ME EQUIPMENT won't go over the threshold and too fast a speed causing the ME EQUIPMENT to become unstable. A single speed was selected for the test as this was felt to be necessary for reproducibility among testers.

Some MOBILE ME EQUIPMENT is provided with castors for convenience but not as means to be wheeled across thresholds or similar obstacles. When the MANUFACTURER clearly indicates this use is not intended there should be no need for the threshold test. Examples of equipment that might not require a threshold test include trolleys and treatment tables that are fitted with castors to enable them to be moved easily aside for cleaning the floor or making space.

Copyright International Electrotechnical Commission
Provided by IHS Markit under license with IEC
No reproduction or networking permitted without license from IHS
Not for Resale, 08/26/2020 19:12:41 MDT

Subclause 9.4.3 – Instability from unwanted lateral movement (including sliding)

The braking functional verification tests allow the braking system to be assessed with compliance giving the presumption of acceptable RISK. The test criteria assume that generally any initial elastic movement and subsequent movement up to 50 mm are acceptable. In accordance with 4.2, if these movements for a specific piece of ME EQUIPMENT and its INTENDED USE seem inappropriate, the RISK should be lowered with additional RISK CONTROL measures.

The braking push force of 15 % or the maximum of 150 N was selected in order to represent reasonably foreseeable misuse for typical ME EQUIPMENT based on input from ME EQUIPMENT MANUFACTURERS.

The intent of braking requirements is to provide a generic test for general ME EQUIPMENT. Thus compliance criteria are black and white. It is acknowledged that some slow unwanted movement of low weight carts (low momentum), could be considered an acceptable RISK.

It is accepted that for many carts with 4 wheels, providing 2 brakes is a reasonable RISK CONTROL measure to mitigate unwanted movement due to inadequate braking. Placing 4 brakes on many carts will not result in greater usage of the brakes, as some of the wheels will typically be pivoted out of reach.

Subclause 4.5 is always applicable and allows the MANUFACTURER to use alternative RISK CONTROL measures, or variations to test method, or test compliance criteria, with justification.

Subclause 9.4.3.1 c) – Instability in transport

The hard flat surface used in this test should reflect the worst case of INTENDED USE. Slippage of wheels against the hard flat surface is a secondary concern. If slippage is detected, it should be determined whether a more appropriate surface should be chosen for the test or the wheel material is inappropriate.

Subclause 9.5 – Expelled parts HAZARD

Expelled parts are ME EQUIPMENT parts or fragments of ME EQUIPMENT parts, such as parts of a damaged vacuum display, a mechanical spring, a gas pressure cylinder, a rotating flywheel or an exploded lithium battery that could be expelled by collision, expansion etc.

The degree of protection against “expelled parts” depends upon the probability of occurrence of HARM and the SEVERITY of HARM. Protective measures can include an ENCLOSURE, barrier, or electronic means (e.g. redundant means to prevent lithium battery charging current).

Subclause 9.6.1 – General

Excessive noise can cause fatigue, interference with speech and acoustic signals, or even damage to hearing. Limits to prevent hearing damage are described in ISO standards.

In medically used rooms, much lower limits are needed for the comfort of PATIENTS and medical personnel. The actual effect of ME EQUIPMENT noise is strongly influenced by the acoustical properties of the room, the insulation between rooms and interaction of ME EQUIPMENT parts.

Excessive vibration will cause discomfort to the PATIENT, OPERATOR, and other persons. Prolonged exposure can cause vascular, neurological, or osteo-articular disorders. Excessive vibration can also cause damage to ME EQUIPMENT or a shift in calibration.

Most ME EQUIPMENT covered by this standard exposes the PATIENT and OPERATOR or other persons to negligible levels of noise and vibration. The RISK MANAGEMENT PROCESS should be able to clearly identify those cases where measurements are required.

Subclause 9.6.2 – Acoustic energy

These values are based on the potential for long term hearing impairment. The value usually used for regulatory purposes worldwide is currently 90 dBA with an offset of 5 dBA. However

Copyright International Electrotechnical Commission
Provided by IHS Markit under license with IEC
No reproduction or networking permitted without license from IHS Not for Resale, 08/26/2020 19:12:41 MDT

the latest research indicates a value of 85 dBA for 8 h over a 24 h period with an offset of 3 dBA when the time doubles or halves [34].

Although the criteria for judging whether a noise is considered impact noise is intentionally not provided, judgement should be used referring to the situation. Examples of impact noise include: the gradient noise of MRI equipment, and lithotripsy impulses.

Subclause 9.6.3 – Hand-transmitted vibration

Threshold values for vibration are much less clear than those for acoustic energy (noise). The value used here is from the *Directive of the European Parliament and of the Council on the minimum health and safety requirements regarding the exposure of workers to the risks arising from physical agents (vibration)* (sixteenth individual Directive within the meaning of Article 16(1) of Directive 89/391/EEC). It corresponds to about a 10 % incidence of blanching (indicative of neurological damage) after 8 years of regular exposure according to ISO 5349-1. It is more difficult to establish limit values for whole body vibration. Therefore this standard does not specify such limits. The end points such as back pain and other adverse health effects are not easily quantifiable, and so no agreed-upon exposure standards have been developed. Relevant information of this subject can be found in standards such as ISO 5805 [28], and ISO 8041 [29].

When a person is exposed to various levels of acceleration over a 24 h period, allowable cumulative exposure can be determined as follows. Consider first Table A.4 of allowable time of exposure over a 24 h period for each level of acceleration.

Table A.4 – Allowable time exposure for level of acceleration

Allowable time of exposure over a 24 h period h	**Acceleration** m/s^2
1	7,07
2	5,00
3	4,08
4	3,54
5	3,16
6	2,89
7	2,67
8	2,50
9	2,36
12	2,04
16	1,77
24	1,44

Some examples of allowable cumulative exposure are provided below.

If a person were exposed to a 5 m/s^2 acceleration for 1 h (which represents 1/2 daily allowable exposure time for this acceleration), followed by an exposure to a 1,44 m/s^2 acceleration for 12 h (which represents 1/2 daily allowable exposure time for this acceleration), this would be an acceptable cumulative exposure over a 24 h period.

If a person were exposed to a 4,08 m/s^2 acceleration for 1 h (which represents 1/3 the allowable daily exposure time for this acceleration), followed by exposure to a 2,36 m/s^2 acceleration for 3 h (which represents 1/3 allowable daily exposure time for this acceleration), followed by exposure to a 1,44 m/s^2 acceleration for 8 h (which represents 1/3 allowable daily exposure time for this acceleration), this would be an acceptable cumulative exposure over a 24 h period.

--`,,```,,,,````-`-`,,`,,`,`,,`---

Copyright International Electrotechnical Commission
Provided by IHS Markit under license with IEC
No reproduction or networking permitted without license from IHS Not for Resale, 08/26/2020 19:12:41 MDT

If a person were exposed to a 5 m/s^2 acceleration for 1 h (which represents 1/2 the allowable daily exposure time for this acceleration), followed by exposure to a 4,08 m/s^2 acceleration for 1 h (which represents 1/3 allowable daily exposure time for this acceleration), followed by exposure to a 2,04 m/s^2 acceleration for 2 h (which represents 1/6 allowable daily exposure time for this acceleration), this would be an acceptable cumulative exposure over a 24 h period.

To summarize, for each acceleration determine the fractional value of allowable daily exposure by dividing the actual exposure time for a given acceleration by the allowable daily exposure time for that acceleration. The sum of the fractional values for each acceleration is not to be greater than 1.

Subclause 9.7 – Pressure vessels and parts subject to pneumatic and hydraulic pressure

The requirements of this subclause do not represent the most stringent combination of national regulations or standards.

In some countries such regulations or standards apply.

Type of systems considered include pneumatic pressure systems, hydraulic pressure systems, steam pressure systems and combinations thereof. These systems might or might not include pressure vessels.

HAZARDS

a) Mechanical rupture or breakage (HARM: lacerations, puncture wounds)

The requirements from Clause 45 of the second edition dealing with this HAZARD, have been moved to this subclause, and remain unchanged.

Requirements have been clarified to indicate that all parts have a MAXIMUM PERMISSIBLE WORKING PRESSURE not less than the pressure in NORMAL CONDITION or SINGLE FAULT CONDITION. In principal there should be a suitable safety factor between the MAXIMUM EQUIPMENT PRESSURE and the bursting pressure, where the bursting pressure is the pressure at which a part suffers from permanent (plastic) deformation or leakage. Industry standards for pressure parts vary, but suitable safety factors are 3 ×, 4 ×, and sometimes 5 × (ISO, ASME, SAE). As a suitable safety factor can vary, depending on factors associated with the end-use application and RISK, it was considered inappropriate to specify a minimum safety factor in the definition of MAXIMUM EQUIPMENT PRESSURE, but instead leave this to the declaration of the MANUFACTURER of such part. It is assumed that MAXIMUM EQUIPMENT PRESSURE declarations will be based on recognized international or national standards, and therefore below bursting pressures at least in line with the multiplication factor shown in Figure 32, (3 ×, derated after 1 MPa to as low as 1,3 × after 30 MPa).

For pressure vessels exceeding both an energy limit (pressure × volume) and a maximum pressure limit, the requirement is to conduct a hydrostatic overpressure test based on the MAXIMUM EQUIPMENT PRESSURE declaration and the multiplication factor shown in Figure 32, (3 ×, derated after 1 MPa to as low as 1,3 × after 30 MPa).

b) Mechanical loss of support (HARM: crush, puncture wounds)

Requirements have been clarified to specify that components in a pressure system, such as those in a hydraulic lift system whose integrity is relied on to reduce the RISK from loss of support need to comply with the NORMAL CONDITION TENSILE SAFETY FACTORS specified in 9.8. The TENSILE SAFETY FACTOR is typically 4 × for parts not impaired by wear, and 8 × for parts impaired by wear (Case B). Thus parts subject to pressure whose failure could result in mechanical rupture and loss in support need to have a MAXIMUM EQUIPMENT PRESSURE based on the higher of the SINGLE FAULT CONDITION pressure and the MANUFACTURER's declaration for each system component as specified in 9.7, or the NORMAL CONDITION pressure and the TENSILE SAFETY FACTOR as specified in 9.8.

Copyright International Electrotechnical Commission
Provided by IHS Markit under license with IEC
No reproduction or networking permitted without license from IHS Not for Resale, 08/26/2020 19:12:41 MDT

c) Leakage of toxic gas or liquid (HARM: chemical or biological cell damage)

The requirements from Clause 45 of the second edition dealing with this HAZARD have been moved to this clause, and remain unchanged.

Requirements have been clarified to indicate that all pressure system components need to have a MAXIMUM EQUIPMENT PRESSURE based on the SINGLE FAULT CONDITION pressure and the MANUFACTURER's declaration for each system component.

d) Leakage of flammable gas or liquid (HARM: fire causing burns or property damage)

The requirements from Clause 45 of the second edition dealing with this HAZARD, have been moved to this clause, and remain unchanged.

Requirements have been clarified to indicate that all pressure system components need to have a MAXIMUM EQUIPMENT PRESSURE based on the SINGLE FAULT CONDITION pressure and MANUFACTURER'S declaration each system component.

Subclause 9.7.5 – Pressure vessels

The Oxford dictionary defines a pressure vessel as "a container designed to hold material at high pressures." This is the usage intended by this standard.

It is assumed that a hydraulic test is not necessary if the pressure is less than or equal to 50 kPa or the product of the pressure and volume is less than or equal to 200 kPa · l.

The safety factors implied by Figure 32 are higher than those generally applied in testing pressure vessels. However, whereas hydraulic testing is normally used to verify that a pressure vessel is free from production faults or serious deterioration, the adequacy of the design being determined in other ways, the present hydraulic test is intended to verify the adequacy of a design where this cannot be established in other ways.

The deletion of national references in the amended text avoids subordinating the requirements of the standard to those of local regulations. The ME EQUIPMENT will sometimes have to satisfy both, or the more demanding, assuming that there are no local regulations that conflict with this standard.

A hydraulic test is specified even for pneumatic vessels, as this is safer for the tester. In achieving the test pressure with a gas, the gas will compress, resulting in more stored energy in the test vessel than would a hydraulic test method. Both methods result in the same test pressure, which is the objective of the test.

Subclause 9.8 – MECHANICAL HAZARDS associated with support systems

The term "support" is taken to include "suspension" and loads can include PATIENTS, OPERATORS and other masses.

Support systems can broadly be categorized as follows.

– A suspension system is one that contains flexing or rigid elements that are designed to suspend masses, including PATIENTS and OPERATORS during NORMAL USE.
– Flexing elements include ropes, cables, chains, belts, bands and springs. Additionally a jack screw nut is considered impaired by wear to the extent needing a higher TENSILE SAFETY FACTOR.
– An actuating system is one that contains elements such as electric, pneumatic or hydraulic actuators, motors, gearboxes, shafts, bearings, pulleys, sheaves, band wheels and guides.
– A support structure is generally a rigid device that can be static or moving and which supports ME EQUIPMENT, external loads and, where necessary, PATIENTS and OPERATORS.

Subclause 9.8.2 – TENSILE SAFETY FACTOR

--`,,```,,,,````-`-`,,`,,`,`,,`---

Copyright International Electrotechnical Commission
Provided by IHS Markit under license with IEC
No reproduction or networking permitted without license from IHS Not for Resale, 08/26/2020 19:12:41 MDT

TENSILE SAFETY FACTORS are applied to provide a margin of safety to the design after all reasonable allowances for operating conditions, material and manufacturing variables, etc., have been made.

In determining whether case A or B is to be used from Table 21, certainty of material strength is required in order to apply case A values. Additionally there needs to be confidence in the determination of TOTAL LOAD in order to apply case A values. TOTAL LOAD is constituted from "static force" and "dynamic force" components. The static force is normally clear. But the dynamic force/loading is sometimes uncertain. When the dynamic forces are known as well as static forces, the TENSILE SAFETY FACTOR is determined with case A. When the dynamic forces are not clear, and the static forces are known, the TENSILE SAFETY FACTOR is determined with case B.

External forces for PATIENT supports can include those generated by application of CPR, etc.

Elongation at break of 5 % is based on historical experience with metallic materials, in particular steel and cast iron. Materials with elongation at break less than 5 % are considered brittle and their failure is likely catastrophic, and therefore a higher safety factor is considered appropriate.

For non-metallic materials:

– Where no other experience exists, and where failure mode is likely catastrophic, this elongation factor is considered appropriate, and therefore a higher TENSILE SAFETY FACTOR is considered appropriate.
– Where experience and testing show otherwise, an elongation at break of less than 5 % can be appropriate before a higher TENSILE SAFETY FACTOR is justified.

For example, PATIENT tables of X-ray/CT/MR systems are often designed with plastic materials laminated or reinforced by carbon fibres/cloths or glass fibres/cloths, since these PATIENT tables must be optimised for low absorption of X-ray radiation (aluminium equivalence), MR compatibility (low proton signal), as well as structural stability. Although these plastic materials reinforced by carbon fibres/cloths can have elongation at break of less than 5 %, many years knowledge, acquired expertise, and post-market surveillance can provide sufficient evidence that suitable structural stability of PATIENT tables is achieved by applying a TENSILE SAFETY FACTOR from Table 21, Situation 1 (rather than Situation 2).

At end of life or periodic maintenance cycle, ME EQUIPMENT needs to maintain structural integrity. Line 1 of Table 21 is normally appropriate for end of life or the end of the periodic maintenance cycle since wear is no longer considered.

Suspension and actuating systems have TENSILE SAFETY FACTORS that are necessarily high to reduce the effects of deterioration through wear and fatigue.

Particular attention should be given to the fixing of structures to floors, ceilings, etc. that are subject to variable TENSILE SAFETY FACTORS.

A hidden defect is one that is not revealed during manufacture, service or normal operation of the ME EQUIPMENT but that could cause failure of a part that could result in a HAZARD. Examples are high internal stresses in heat-treated parts such as springs, broken strands of wire inside cables and porosity inside castings.

Figure A.17 contains an example of determining the appropriate TENSILE SAFETY FACTOR using Table 21. Figure A.18 contains an example of determining design and test loads. These examples are not intended to cover all possible cases. For a particular design, these TENSILE SAFETY FACTORS and design/test loads can vary according to the materials used, their wear characteristics, loading conditions, etc.

This subclause focuses on safety factors as the suggested approach to have confidence that the equipment will maintain structural integrity during its EXPECTED SERVICE LIFE. In some cases the specified safety factors are more than needed, and in some cases even larger factors could be considered appropriate. The compliance criteria can be satisfied by RISK MANAGEMENT rather than by the use of the safety factor route. For new materials or for

Copyright International Electrotechnical Commission
Provided by IHS Markit under license with IEC
No reproduction or networking permitted without license from IHS Not for Resale, 08/26/2020 19:12:41 MDT

structures with sophisticated monitoring of stresses, the safety factors might not be necessary.

If it is deemed that the failure mode of the part does not result in an unacceptable RISK, the TENSILE SAFETY FACTORS specified in Table 21 do not apply. For example, for proprietary components such as bearings it is acceptable to rely on the component MANUFACTURER'S data for load and life expectancy without applying a TENSILE SAFETY FACTOR.

A jack screw nut considered impaired by wear is usually intentionally constructed from a material softer than the jack screw. The intent is to have generic requirement provided for general ME EQUIPMENT.

Newer jack screw designs can have less friction than traditional designs, and, for example, can include multiple ball bearings. Such designs can be considered as less “impaired by wear” as dictated by vendor declarations and a MANUFACTURER’S RISK ASSESSMENT.

Subclause 4.5 is always applicable and allows the MANUFACTURER to use alternative RISK CONTROL measures, or variations to a test method or test compliance criteria, with justification.

Subclause 9.8.3 – Strength of PATIENT or OPERATOR support or suspension systems

This subclause deals with forces applied on support or suspension parts of ME EQUIPMENT, intended to support or suspend the mass of a human body or part of the mass of a human body, and to ACCESSORIES used on such support or suspension parts. For adult PATIENTS or OPERATORS the 135 kg mass represent the 99 percentile of the population. For specific populations, higher mass or lower mass can be used (e.g. heavy person or paediatric application).

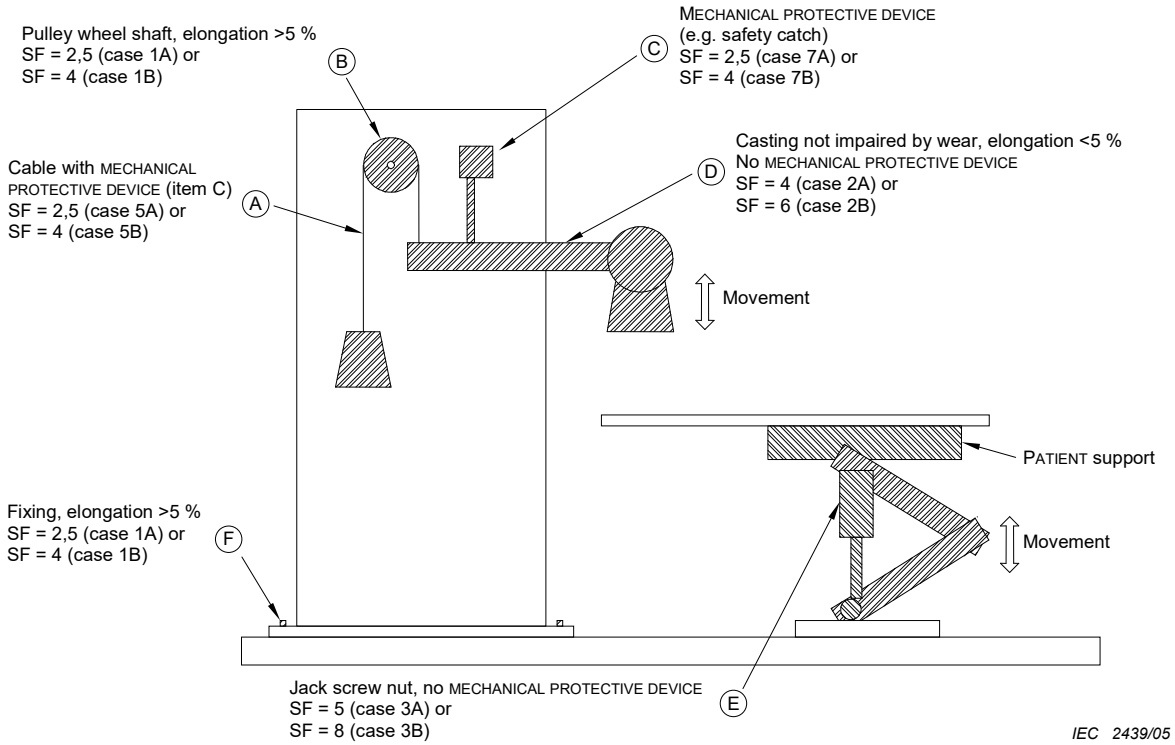

Figure A.16 – Example of determining TENSILE SAFETY FACTOR using Table 21

Copyright International Electrotechnical Commission
Provided by IHS Markit under license with IEC
No reproduction or networking permitted without license from IHS
Not for Resale, 08/26/2020 19:12:41 MDT

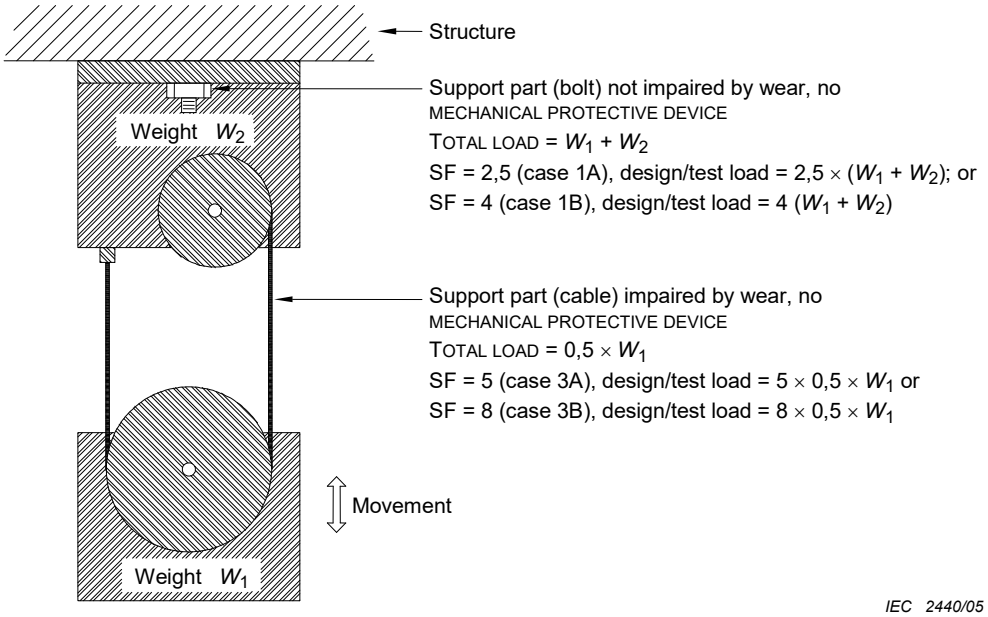

NOTE TOTAL LOAD is shown based on only static forces to obtain actual total loads, dynamic forces also need to be included.

Figure A.17 – Example of determining design and test loads

Subclause 9.8.3.2 – Static forces due to loading from persons

Figure A.19 contains an example of human body mass distribution for PATIENT support surfaces.

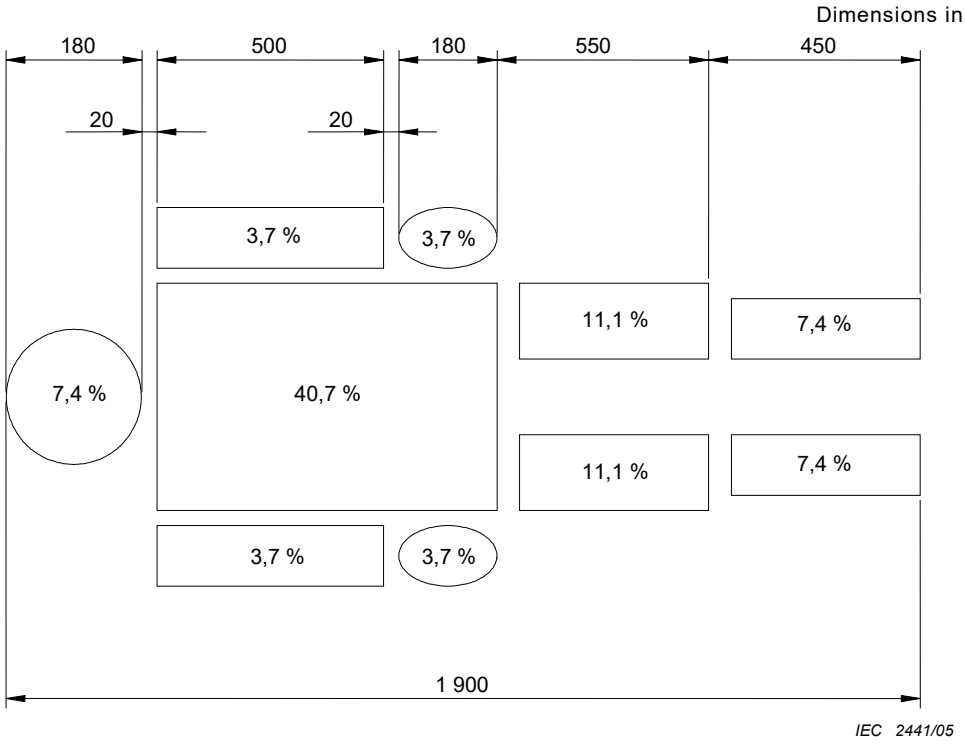

Figure A.18 – Example of human body mass distribution

Copyright International Electrotechnical Commission
Provided by IHS Markit under license with IEC
No reproduction or networking permitted without license from IHS
Not for Resale, 08/26/2020 19:12:41 MDT

The distribution mass of a body diagram is an average distribution based on anthropometrical data. Due to the variety of population or specific categories of age, it can vary. For sedentary people not having a physical activity the mass of the upper part of the body can represent a more important percentage.

The variety of ME EQUIPMENT does not allow more precision to be given in this general standard. It is up to the particular standard to define more adequately the distribution area or the worst-case position, rather than dynamic tests.

A foot rest is tested for twice its normal load, rather than a load based on a TENSILE SAFETY FACTOR value from Table 21, as it is intended to support a PATIENT'S weight for only a short duration of time.

The test with a mass of 80 kg placed 60 mm from the outer edge is intended to simulate the centre of gravity of a PATIENT sitting or leaning on the edge of a support surface.

During the static loading tests, it's intended that any temporary elastic deflection (during the test), and permanent plastic deflection (after the test) are checked for any adverse effect on BASIC SAFETY or ESSENTIAL PERFORMANCE.

For the step loading test, the committee felt that a 5° deflection would provide a measurable quantity that would represent a reasonable limit for acceptance. The 2X loading factor is a precedent from the 2nd edition of IEC 60601-1, and seems to recognize the temporary loading that steps represent during their life.

For the sitting surface loading test, no specific linear or arc limits are specified. The intent is to evaluate any temporary elastic or permanent plastic deflections for any adverse effect on BASIC SAFETY or ESSENTIAL PERFORMANCE. The 60 % sitting loading factor was considered representative of actual sitting load, when legs are dangling off the edge of the sitting surface. Loss of function is not considered unacceptable unless associated with ESSENTIAL PERFORMANCE. The intent is damage should not result in injury to persons, or loss of RISK CONTROL measures. Surfaces that are intended to support sitting and at other times full patient loads are also evaluated for compliance with the appropriate loading factor(s) in 9.8.2.

Subclause 9.8.3.3 – Dynamic forces due to loading from persons

A general dynamic test is defined which represents common situations represented by a person sitting down or standing up.

The requirement of this subclause is intended to apply to the chairs for dental surgical procedures, X-ray tables, and many other similar types of ME EQUIPMENT. The ME EQUIPMENT should be in all operating modes and positions where dynamic loads from PATIENTS can be reasonably expected. For example, when a PATIENT table is positioned in an area of a CAT or magnet structure, the dynamic test is not applicable as the dynamic loading caused by a PATIENT is negligible.

ME EQUIPMENT should be designed to bear a repeating force, by considering appropriate TENSILE SAFETY FACTORS and the results of fatigue calculations. TENSILE SAFETY FACTORS exist to show the reliability of the equipment without real testing.

The bottom portion of the human body test mass apparatus shown in Figure 33 is foam, and should simulate contact by the relevant PATIENT part.

Subclause 9.8.4 – Systems with MECHANICAL PROTECTIVE DEVICES

The intent of a MECHANICAL PROTECTIVE DEVICE is to act to prevent HARM in the event of the failure of the primary support means that is subject to wear. The failure of the primary support means subject to wear is considered a SINGLE FAULT CONDITION if it has a TENSILE SAFETY FACTOR in accordance with Table 21, rows 5 and 6. To protect against HARM in this SINGLE FAULT CONDITION, the MECHANICAL PROTECTIVE DEVICE acts as a backup, and needs to have the TENSILE SAFETY FACTOR indicated in Table 21, Row 7. It is considered good engineering practice to construct a MECHANICAL PROTECTIVE DEVICE from non-brittle materials, and therefore Row 7 does not include an elongation column.

Copyright International Electrotechnical Commission
Provided by IHS Markit under license with IEC
No reproduction or networking permitted without license from IHS Not for Resale, 08/26/2020 19:12:41 MDT

To test a MECHANICAL PROTECTIVE DEVICE, the primary support means subject to wear needs to be defeated. For example if the primary support system is a cable, the cable would be cut.

Clause 10 – Protection against unwanted and excessive radiation HAZARDS

Radiation from ME EQUIPMENT can occur in all forms known in physics. BASIC SAFETY requirements are concerned with unwanted radiation. Protective measures are necessary for ME EQUIPMENT and for the environment and methods for determining levels of radiation need to be standardized.

This clause is intended to deal with stray radiation (such as scattered radiation from radiological equipment) and incidental radiation (such as X-ray emitted by CRTs). A requirement for unintended or excessive output of radiation that ME EQUIPMENT is intended to deliver to the PATIENT is covered in 12.4.5.

For ionizing radiation IEC requirements generally comply with the International Commission for Radiation Protection (ICRP) Recommendations. Their purpose is to provide data that are immediately usable by designer and RESPONSIBLE ORGANIZATION.

Their evaluation is possible only by adequate study of operating methods and duration of operation of ME EQUIPMENT and positioning of OPERATOR and assistants, because application of worst case conditions would give rise to situations that might hamper proper diagnosis or treatment.

Recent ICRP publications also instruct the OPERATOR in methods for the restriction of intentional irradiation.

Subclause 10.1.1 – ME EQUIPMENT not intended to produce diagnostic or therapeutic X-radiation

Spurious X-radiation from components such as Video Display Units (VDU) is a potential source of concern for ME EQUIPMENT, many of which contain VDUs. Annex H of IEC 60950-1:2005 contains a well-accepted PROCEDURE for measuring such spurious emissions for information technology equipment. The limits in that annex are based on ICRP 60 [39].

IEC 62368-1:2018 is replacing IEC 60950-1 and was incorporated into this standard as part of Amendment 2. Based on a review of the test procedures and requirements according to IEC 60950-1:2005 and IEC 62368-1:2018, it was determined that there are differences in the measurement procedures and acceptance criteria. IEC 62368-1:2018 adds an additional requirement for measurements under single fault conditions. Additionally, IEC 62368-1:2018 adds a requirement that images generated during the test be intelligible (which is defined). IEC 62368-1:2018 does not include the 50 mm measuring surface of the OPERATOR access area which is specified in IEC 60950-1:2005. The limits are the same between IEC 60950-1:2005 and IEC 62368-1:2018.

Other normative references to IEC 60950-1 are alternative means of addressing items such as CREEPAGE DISTANCE and AIR CLEARANCE. A user of this standard does not have to reference 60950-1 unless they wish to use the insulation coordination methods contain in that document.

Subclause 10.3 – Microwave radiation

This subclause specifies a microwave power density limit to mitigate thermal harm to whole body tissue. The intention is that compliance might be appropriately determined with engineering judgement, in lieu of testing, when it's obvious that emissions are nowhere near the 10 W/m^2 power density limit. Knowledge about equipment transmission specifications and engineering judgement might be used to determine compliance. The safety threshold of 10 W/m^2 greatly exceeds that allowed for wireless communication uses, where SAR (W/kg) limits are applicable. For example, equipment with microprocessor clock oscillators or intentional transmission radios such as Wi-Fi™, Bluetooth®, GPS, or cellular would comply

Copyright International Electrotechnical Commission
Provided by IHS Markit under license with IEC
No reproduction or networking permitted without license from IHS Not for Resale, 08/26/2020 19:12:41 MDT

with this threshold since these meet more stringent limits for their applicable bandwidth. When this confidence does not exist, appropriate power density measurements should be conducted.

Subclause 10.4 – Lasers

IEC 60825-1:2014 is applicable to safety of laser products emitting laser radiation in the wavelength range 180 nm to 1 mm. This includes laser diodes. A laser product can consist of a single laser with or without a separate power supply or it can incorporate one or more lasers in a complex optical, electrical, or mechanical system.

Any laser product is exempt from all further requirements of IEC 60825-1 if classification by the laser manufacturer demonstrates that the emission level does not exceed the AEL (Accessible Emission Limit) of Class 1 under all conditions of operation, maintenance, service and failure.

In other editions of IEC 60825-1, LEDs were included in the scope of that standard, and they can be still included in other parts of the IEC 60825 series. However, with the development of lamp safety standards, optical radiation safety of LEDs in general can be more appropriately addressed by lamp safety standards. The removal of LEDs from the scope of IEC 60825-1 does not preclude other standards from including LEDs whenever they refer to lasers. IEC 62471 [67] can be applied to determine the risk group class of an LED or product incorporating one or more LEDs.

Subclauses 10.5, 10.6 and 10.7 – Other visible electromagnetic, infrared and ultraviolet radiation

IEC 62471 [67] gives guidance for evaluating the photobiological safety of lamps and lamp systems including luminaires. Specifically, it specifies the exposure limits, reference measurement technique and classification scheme for the evaluation and control of photobiological hazards from all electrically powered incoherent broadband sources of optical radiation, including LEDs but excluding lasers, in the wavelength range from 200 nm through 3 000 nm. IEC 62471 was originally prepared as Standard CIE S 009:2002 by the International Commission on Illumination.

Where appropriate, IEC 60601-2-57 [75] is used for ME EQUIPMENT incorporating non-laser light sources intended to create non-visual photobiological effects.

Subclause 11.1 – Excessive temperatures in ME EQUIPMENT

Temperature limits are required to prevent HAZARDOUS SITUATIONS for almost all types of ME EQUIPMENT with the purpose of preventing rapid ageing of insulation and discomfort where ME EQUIPMENT is touched or manipulated, or injuries where PATIENTS could contact ME EQUIPMENT parts.

ME EQUIPMENT parts might be inserted into body cavities, usually temporarily but sometimes permanently.

For PATIENT contact, special temperature limits have been set.

Subclause 11.1.1 – Maximum temperature during NORMAL USE

Table 22 addresses limits for parts that could affect compliance of the ME EQUIPMENT with this standard in general (e.g. electrical BASIC SAFETY).

It is not intended that the ME EQUIPMENT parts be tested in every possible configuration of NORMAL USE as long as the MANUFACTURER can determine the worst-case conditions. The “worst case” will almost always include the highest allowable ambient temperature and operation of the ME EQUIPMENT at the maximum DUTY CYCLE, but other specific aspects of the configuration of the ME EQUIPMENT (such as attachment of ACCESSORIES) should be determined by the MANUFACTURER based on a thorough understanding of the ME EQUIPMENT'S design.

Copyright International Electrotechnical Commission
Provided by IHS Markit under license with IEC
No reproduction or networking permitted without license from IHS Not for Resale, 08/26/2020 19:12:41 MDT

Subclause 11.1.2 – Temperature of APPLIED PARTS

Table 23 and Table 24 addresses HAZARDS that could arise from human contact with higher temperatures. Human contact temperatures were based on clinical expertise, clinical literature [52] and experimentation. In addition, the values agree with those of the European Norm EN 563 [38].

Although the maximum surface temperature for an APPLIED PART was raised from 41 °C to 43 °C in response to the clinical input mentioned above, input from some clinicians pointed out that infants as well as some other (thermally) high risk groups could be more prone to HARM from heated surfaces at 43 °C.

Ideally, particular standards for ME EQUIPMENT used for these PATIENT groups would have requirements for (where necessary) lower contact temperatures. In order to address those cases where such particular standards do not exist, the working group felt that notification of the RESPONSIBLE ORGANIZATION when temperatures exceed the second edition limit of 41 °C was adequate. However, the new 43 °C limit is to be considered an absolute maximum.

When measuring APPLIED PART temperatures, the method used should simulate the worst-case configuration when possible using real or simulated human skin. Determination of the worst-case configuration should consider aspects such as the likely body temperature and whether or not the part of the body or APPLIED PART itself is covered (such as with a blanket). Simulated human skin for these purposes could include materials such as silicon rubber.

Subclause 11.1.2.2 – APPLIED PARTS not intended to supply heat to a PATIENT

Table A.5 is provided as guidance for ME EQUIPMENT that creates low temperatures (cools) for therapeutic purposes or as part of its operation. Normative requirements have not been included in this standard because such ME EQUIPMENT is uncommon.

Table A.5 – Guidance on surface temperatures for ME EQUIPMENT that creates low temperatures (cools) for therapeutic purposes or as part of its operation

ME EQUIPMENT and its parts		Minimum Temperature [a] °C	
		Aluminium	Steel
External surface of ME EQUIPMENT and its parts that are likely to be touched for a time "*t*".[b]	*t* < 1 s	–20	–20
	1 s ≤ *t* < 10 s	–10	–15
	10 s ≤ *t* < 60 s	–2	–7

[a] The allowable minimum temperature limit values for external surfaces that are likely to be touched by the PATIENT, OPERATOR and other persons are based on freezing threshold values of a finger touching different materials (frostbite threshold).

[b] The probability of occurrence of contact and the duration of contact should be determined and documented in the RISK MANAGEMENT FILE.

Subclause 11.1.3 – Measurements

The proper use of thermocouples is recognized in other standards as a valid test technique. The temperature limits are lowered to compensate for errors that could occur in the construction and placing of the thermocouple.

During development of the requirements of 11.1.3, the working group discussed whether it would be appropriate to reduce the maximum allowable temperature for surfaces and APPLIED PARTS at higher altitudes. In response to this question, a thorough evaluation was performed by Dr. Joachim Kohl, an expert member of the group. The following summarizes the results of that evaluation (see Figure A.22).

Copyright International Electrotechnical Commission
Provided by IHS Markit under license with IEC
No reproduction or networking permitted without license from IHS Not for Resale, 08/26/2020 19:12:41 MDT

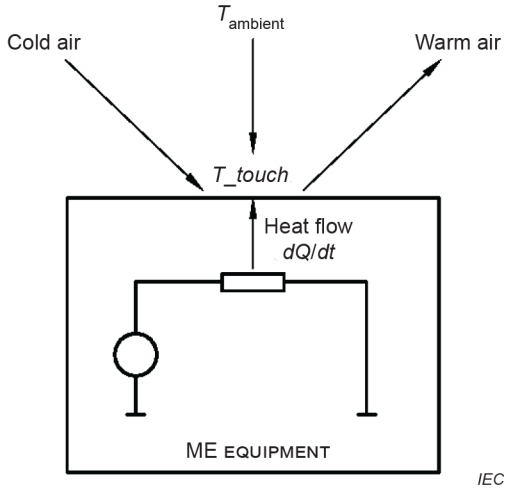

Figure A.22 – Maximum allowable temperature for surfaces and APPLIED PARTS at higher altitudes

The following variables and symbols are used in the evaluation:

T_touch	touch temperature at the surface of the ME EQUIPMENT
DeltaT	temperature difference of the touched area to ambient
R_thermal	thermal resistance of the ME EQUIPMENT area under test to ambient
Q	heat
dQ/dt	heat flow
Pambient	ambient air pressure
alpha	heat transfer coefficient = *dQ/dt* / (*DeltaT* * *area*)
L	characteristic length of the heat transfer area
area	cooling area of the device
lambda	heat conductance
eta	dynamic viscosity
rho	density of gas
Nu	Nusselt number
Re	Reynold number
Gr	Grashof number
sqrt	square root
~	proportional

Evaluation of the effects of altitude on thermal transfer:

The standard heat transfer equation is:

$$DeltaT = R\_thermal * dQ/dt$$

For *R_thermal*, one can estimate:

$$R\_thermal \sim 1 / Pambient^{m}$$

with the exponent m = 0,6 … 0,8, we will assume 1.

Copyright International Electrotechnical Commission
Provided by IHS Markit under license with IEC
No reproduction or networking permitted without license from IHS
Not for Resale, 08/26/2020 19:12:41 MDT

Equations about the proportionality to 1 / *Pambient*^{m}:

Therefore,

$$R\_thermal \sim 1 / alpha$$

where the proportionality factor contains geometric data.

Definition of *Nu*:

$$Nu = alpha * L / lambda$$

Results of theoretical investigations:

$$Nu \sim Re^m$$

The proportionality factor depends on geometry and on the kind of gas and the way of air flow, but not on temperature, pressure, density.

The exponent m is determined by geometry and the way of air flow. For free convection due to a temperature gradient *Re* is given by:

$$Re = sqrt\ (\ 0{,}4 * Gr)$$

The definition of *Gr* leads to:

$$Gr \sim (rho\ /\ eta)^2$$

so that:

$$Re \sim rho / eta.$$

This last relationship also holds true for forced convection.

From the general gas equation we can see:

$$rho \sim Pambient$$

Lambda and *eta* do not depend on pressure (according to standard physics textbooks). Putting it all together leads to the above stated proportionality between *R_thermal* and *Pambient*.

Subclause 11.2 – Fire prevention

Within most environments where ME EQUIPMENT is used, other sources of “fuel” for combustion are typically far more significant than that provided by the ME EQUIPMENT itself. The requirements addressing fire in this standard focus on preventing the ME EQUIPMENT from being the source of combustion. For this reason, these requirements focus on ME EQUIPMENT that contains or is used in the presence of OXYGEN RICH ENVIRONMENTS. These requirements attempt to ensure that any potential source of ignition remains isolated from the OXYGEN RICH ENVIRONMENTS under NORMAL USE and SINGLE FAULT CONDITIONS.

Where ME EQUIPMENT is not used in such environments, assuring that the limits for operating temperatures and requirements for overload protection are met should be considered adequate.

For ME EQUIPMENT that could provide a significant source of fuel (in comparison to the normal operating environments) additional requirements should be provided by particular standards. Where no particular standard exists, such issues should be specifically addressed in applying the RISK MANAGEMENT PROCESS as required in 4.2.

--`,,```,,,,````-`-`,,`,,`,`,,`---

Copyright International Electrotechnical Commission
Provided by IHS Markit under license with IEC
No reproduction or networking permitted without license from IHS Not for Resale, 08/26/2020 19:12:41 MDT

Subclause 11.2.1 –Strength and rigidity required to prevent fire in ME EQUIPMENT.

At least all electrical parts that could result in a HAZARDOUS SITUATION, with the exception of POWER SUPPLY CORDS and other necessary interconnecting cords, should be enclosed in material that will not support combustion.

This does not preclude the use of an outer cover of other material covering an inner cover complying with the above recommendation.

For guidance on assessing fire HAZARDS, see IEC 60695-1-10 [17].

Subclause 11.2.2 – ME EQUIPMENT and ME SYSTEMS used in conjunction with OXYGEN RICH ENVIRONMENTS

While not a flammable mixture, the presence of an OXYGEN RICH ENVIRONMENT increases the flammability of many substances. Reports of fires in OXYGEN RICH ENVIRONMENTS in ME EQUIPMENT are unusual. However, when such fires do occur in the hospital environment they can have tragic consequences.

ME EQUIPMENT intended to operate in conjunction with an OXYGEN RICH ENVIRONMENT should be designed to minimize the probability or occurrence of ignition of flammable materials.

Where appropriate, particular standards should specify the corresponding requirements.

Subclause 11.2.2.1 a)

Cotton is regarded to be the material with the lowest ignition temperature and energy in comparison with electronic circuits and it is assumed that it can be found in the interior of a device as dust.

The maximum surface temperature limit is based on the minimum hotplate ignition temperature for fire retardant cotton in 100 % oxygen that is given in NFPA 53 [41] as 310 °C. The assumption was therefore made that 300 °C was an acceptable temperature limit in ME EQUIPMENT with OXYGEN RICH ENVIRONMENTS.

The worst case conditions described in the text make it possible to provide simple numbers as limitations.

The values for sparking are taken from Kohl, H.-J. *et al*., ASTM STP 1395 [37].

This subclause allows the use of electronic circuits in OXYGEN RICH ENVIRONMENTs only when their power supply is limited. The resistive limitation of the power input is necessary for the SINGLE FAULT CONDITION of an open solder joint that might spark. The same reason applies to the limitation of energy in capacitances and inductances. In most cases the limitation in item 4) to 300 °C is more restrictive than these. For most small components like decoupling capacitors, or where the failure of a component causes the maximum possible power to be drawn from the source, it is necessary to limit the power to about 1 W. The PROCEDURE to find the necessary value to limit the power so that the 300 °C limit is not exceeded can be as follows:

– look for the smallest component that can match to the power source in a SINGLE FAULT CONDITION;
– estimate its thermal resistance;
– calculate the power limitation = 200 °C / thermal resistance.

Subclause 11.2.2.1 b) 2)

This item addresses the condition of an undetected oxygen leak. In accordance with the definition of SINGLE FAULT SAFE, such a leak (because it is undetected) is considered a NORMAL CONDITION (see 4.7). Similarly, only the failure of the ventilation, which is undetected, needs to be considered a NORMAL CONDITION. Where a ventilation system's design makes it unlikely that it will be completely blocked in NORMAL USE, such blockages should not be considered. The

--`,,```,,,,````-`-`,,`,,`,`,,`---

Copyright International Electrotechnical Commission
Provided by IHS Markit under license with IEC
No reproduction or networking permitted without license from IHS Not for Resale, 08/26/2020 19:12:41 MDT

only way to find the maximum leak rate that needs to be considered is to find the minimum leak rate that can safely be detected by the RESPONSIBLE ORGANIZATION.

Subclause 11.2.2.1 b) 3)

The cause of the HAZARDOUS SITUATION is: a leak occurs and is not detected; some time later an electrical failure occurs that starts an ignition. The time interval t_c for checking the seals can be calculated as follows:

– estimate the probability per time p_e of an electrical failure that exceeds the values given in 11.2.2.1 a);

– estimate the probability per time of the oxygen leak p_o ;

– determine the accepted probability of dangerous failures per time r ;

– calculate: $t_c = r / (0{,}5 \times p_e \times p_o)$.

Subclause 11.2.2.2 – External exhaust outlets for OXYGEN RICH ENVIRONMENT

Serious oxygen fires have been reported where the ignition source has been a faulty electrical connector close to an oxygen outlet.

Subclause 11.3 – Constructional requirement for fire ENCLOSURES of ME EQUIPMENT

The requirements for fire ENCLOSURES have been included primarily as an alternate to the tests related to SINGLE FAULT CONDITIONS (associated with combustion and its consequences listed in Clause 13). By requiring flame resistance for the ENCLOSURE and materials contained within it, the probability of occurrence of fire escaping such ENCLOSURES is considered minimal. Where the fire ENCLOSURE constitutes only a part of the ME EQUIPMENT, careful analysis should be performed to assure that a reliable barrier to the propagation of fire exists.

IEC 61010-1:2010 [22], subclause 9.3.2, requires wire insulation to retard flame propagation when used inside a fire ENCLOSURE. Wire with a flammability rating of UL 2556 [72] VW-1 or equivalent is considered to meet this requirement. In case of doubt, wires are tested according to the applicable requirements of IEC 60332-1-2 [55] or IEC 60332-2-2 [56]. These wire flame resistance requirements are considered acceptable for ME EQUIPMENT and ME SYSTEMS.

Subclause 11.4 – ME EQUIPMENT and ME SYSTEMS intended for use with flammable anaesthetics

While the use of flammable anaesthetics is uncommon, it was determined during the writing of this edition that some MANUFACTURERS might still want to rate their ME EQUIPMENT as CATEGORY AP or CATEGORY APG. In order to make this edition more usable (by removing the rarely used section on this topic) while maintaining the availability of the CATEGORY AP and CATEGORY APG RATINGS, the material has been moved to an annex and only this clause's brief reference to it remains in the body of the standard.

The final determination of whether ME EQUIPMENT should be RATED CATEGORY AP or CATEGORY APG should be determined by the MANUFACTURER based on the INTENDED USE. Requirements related to CATEGORY AP and CATEGORY APG are found in Annex G (see also the rationale for Annex G).

Subclause 11.5 – ME EQUIPMENT and ME SYSTEMS intended for use with flammable agents

While it was necessary to address cases where ME EQUIPMENT is used with flammable agents (such as some disinfectants) or in areas where they are commonly used and where the MANUFACTURER of the ME EQUIPMENT has given no special handling instructions or precautions, the variety of such agents, their volatility as well as many other determinant factors precludes giving specific instructions. The only reasonable solution in such cases is to assure that the MANUFACTURER evaluates and addresses the associated RISK.

A mixture of the vapour of a flammable disinfection or cleaning agent with air can be treated as a FLAMMABLE ANAESTHETIC MIXTURE WITH AIR subject to national or local regulations.

Copyright International Electrotechnical Commission
Provided by IHS Markit under license with IEC
No reproduction or networking permitted without license from IHS Not for Resale, 08/26/2020 19:12:41 MDT

Subclause 11.6.2 – Overflow in ME EQUIPMENT

The purpose of this test is to assess not only whether the liquid actually wets any parts in a way that would adversely affect a MEANS OF PROTECTION or result in a HAZARD; but also whether a similar amount of liquid that could overflow on another occasion and reach the same parts of the ME EQUIPMENT, but possibly not land in exactly the same way, could adversely affect a MEANS OF PROTECTION or result in a HAZARD. The results of the test should be evaluated to assure they realistically represent conditions that will be experienced when the ME EQUIPMENT is used.

Subclause 11.6.3 – Spillage on ME EQUIPMENT and ME SYSTEMS

In addition to ME EQUIPMENT that requires the use of fluids some ME EQUIPMENT is exposed to fluid spills as part of REASONABLY FORESEEABLE MISUSES. In such cases spillage is considered NORMAL USE and the associated RISKS are addressed by the requirements of this subclause. Furthermore, as described in 9.4.2, tilting of TRANSPORTABLE ME EQUIPMENT to an angle of 10º is considered NORMAL USE. In such cases (as well as for ME EQUIPMENT requiring fluids) the amount and location where spills can occur vary greatly. Only a proper evaluation of the ME EQUIPMENT being tested can determine an appropriate application of the requirement. Doing such an evaluation is the responsibility of the MANUFACTURER and the results are to be provided to those performing the test (typically in the RISK MANAGEMENT FILE). This requirement would be an appropriate area for evaluation by writers of particular standards.

In accord with the principles outlined in IEC 62366 [76], where explicit warnings or safety notices (validated as described in IEC 62366-1) are given, failure to heed such warnings or safety notices is considered abuse of the ME EQUIPMENT that is beyond the responsibility of the MANUFACTURER. Therefore where such warnings or safety notices are given, the liquid reservoir is filled only to the intended fill level before being tilted to 10º. Where they are not given, the liquid reservoir is filled 15% above the intended level.

Examination of the NORMAL USE of ME EQUIPMENT should provide an adequate estimate of the amount of fluid that is likely to be spilled on it.

Subclause 11.6.4 – Leakage

Leakage is considered to be a SINGLE FAULT CONDITION.

Subclause 11.6.5 – Ingress of water and particulate matter into ME EQUIPMENT and ME SYSTEMS

Although it is unlikely that ME EQUIPMENT would be RATED for protection against particulate matter, IEC 60529 does address the possibility and it should be considered a valid option. The presence of any water or particulate matter inside the ENCLOSURE after testing in accordance with its IEC 60529 classification is regarded as a NORMAL CONDITION. The requirement is therefore to assess the possibility of a HAZARDOUS SITUATION due to such ingress in combination with a possible SINGLE FAULT CONDITION (such as an interrupted PROTECTIVE EARTH CONNECTION).

Subclause 11.6.8 – Compatibility with substances used with the ME EQUIPMENT

ME EQUIPMENT, ACCESSORIES and parts thereof should be designed to be used safely with the substances with which they are intended to come into contact in NORMAL USE.

Where appropriate, particular standards should specify the corresponding requirements.

Subclause 11.8 – * Interruption of the power supply / SUPPLY MAINS to ME EQUIPMENT

Interruption of the power supply could result in a HAZARDOUS SITUATION due to loss of functionality. This HAZARDOUS SITUATION is dealt with in 7.9.2.4. Restoration of the power source can also result in HAZARDOUS SITUATIONS. Examples could include unintended activation of moving parts or resumption of dangerous outputs. These potentially HAZARDOUS SITUATION and the duration of the power interruption that could result in the HAZARDOUS SITUATIONS need to be considered as part of the RISK MANAGEMENT PROCESS.

--`,,```,,,,````-`-`,,`,,`,`,,`---

Copyright International Electrotechnical Commission
Provided by IHS Markit under license with IEC
No reproduction or networking permitted without license from IHS Not for Resale, 08/26/2020 19:12:41 MDT

IEC 61000-4-11 [21] defines general and reproducible conditions for the operation of electrical and electronic equipment if they undergo voltage dips, short interruptions and voltage variations. The voltage level and duration of short interruptions are defined in Table 5 of IEC 60601-1-2:2014 and IEC 60601-1-2:2014/AMD1:2020. IEC 60601-1-2 treats these short interruptions as a NORMAL CONDITION.

For ME EQUIPMENT in which the safety of the PATIENT depends on the continuity of the power, particular standards should include requirements regarding power failure alarms or other precautions.

Clause 12 – Accuracy of controls and instruments and protection against hazardous outputs

IEC 60601-1 is the guideline for all particular standards and, therefore, contain some requirements of a more general character in order to serve this purpose. For this reason, it is necessary to have some generally formulated requirements in Clause 12.

Standardization bodies, including those outside IEC, have adopted the system of this IEC publication in order to have a single uniform system of standards. In such cases it is most important to give a guideline in this clause.

This clause introduces the concept of USABILITY. The term was chosen over the commonly used terms of “user error” or “human error” because not all errors are the result of oversight or carelessness on the part of the OPERATOR of the ME EQUIPMENT. All too frequently, use errors are the direct result of poor human interface design that seduces the OPERATOR into an incorrect decision. Use errors caused by inadequate USABILITY have become an increasing cause for concern. The USABILITY ENGINEERING PROCESS described in IEC 60601-1-6 is intended to achieve reasonable USABILITY, which in turn is intended to minimise use errors and to minimise use associated RISKS.

Subclause 12.4.1 – Intentional exceeding of safety limits

If the control range of ME EQUIPMENT is such that the delivered output in a part of the range considerably differs from the output that is regarded as non-hazardous, means should be provided that prevent such a setting or that indicate to the OPERATOR (for example by means of an apparent additional resistance when the control is set or the bypassing of an interlock) that the selected setting is in excess of a safety limit.

Where appropriate, particular standards should specify safe output levels.

Subclause 12.4.3 – Accidental selection of excessive output values

Protection for the accidental selection of excessive output values can be obtained by appropriate steps to minimise the possibility to accidentally select excessive output, e.g. by interlocks in order to achieve deliberate action or by separated output terminals. In considering the measures for protection, the standard on human factors could be taken into account.

Clause 13 – HAZARDOUS SITUATIONS and fault conditions

ME EQUIPMENT or its parts could result in HAZARDOUS SITUATIONS due to abnormal operation or fault conditions, which, therefore, needs to be investigated. While this clause identifies specific fault conditions, 4.7 requires that the RISK ANALYSIS be used to identify other failures which should be investigated.

Subclause 13.1.1 – General

While separation requirements (CREEPAGE DISTANCES and AIR CLEARNACES) and insulation requirements are detailed in Clause 8, these requirements should not be viewed as applying only to RISKS associated with electrical HAZARDS. In addition to the potential for electric

Copyright International Electrotechnical Commission
Provided by IHS Markit under license with IEC
No reproduction or networking permitted without license from IHS Not for Resale, 08/26/2020 19:12:41 MDT

currents to cause fibrillation (due to electric shock), these currents can also be the root cause of injuries not directly related to electric shock.

Examples of these other HAZARDS (related to inadequate or faulty insulation or short circuits across physical spacing used as insulation) could include sparks that could become a source of ignition of flammable materials (as discussed in Clause 11) or functional failures that could cause a loss of ESENTIAL PERFORMANCE. In these cases, compliance with the insulation requirements of Clause 8 should always be considered evidence that RISKS arising from the failure of insulation or spacing have been adequately addressed when evaluating the safety of ME EQUIPMENT.

Finally, it should be noted that the requirements for CREEPAGE DISTANCES and AIR CLEARNACES are not intended to be required at the circuit board level where there is no significant RISK that spacings will be compromised (shorted) by contaminates (from NORMAL USE or the manufacturing PROCESS) such as fluids or particulate matter (see also IEC 60529). In most applications, spacing between (for example) circuit board traces and component leads are not considered likely to fail. In cases where there is doubt as to whether spacing could fail (wherethe CREEPAGE DISTANCE and AIR CLEARNACE requirements of 8.9 are not met), the MANUFACTURER'S RISK ANALYSIS should evaluate the likelihood of shorting across such gaps, but only where such short-circuiting could directly result in unacceptable RIRKS. Where shorting across spacing or insulation failures are clearly not likely to result in unacceptable RISKS, such analysis should not be required.

Subclause 13.1.2 – Emissions, deformation of ENCLOSURE or exceeding maximum temperature

The delivery of unintended hazardous quantities of energy or substances to a PATIENT or into the natural environment could be addressed by particular standards.

Hazardous quantities of poisonous or ignitable gas depend on the type of gas, concentration, place of emission etc.

SINGLE FAULT CONDITIONS that might result in a small fire, but where the fire would remain contained within a fire ENCLOSURE, are acceptable because the containment will limit the effects to the area inside of the fire ENCLOSURE.

The NOTE in 13.1.2 is related to the 15 W limit when the investigated part of the supply circuit is a battery. It is intended to alert the reader that potentially hazardous energies inside the battery need to be considered. Therefore, the power dissipation needs to be measured directly on the output contacts of the battery, regardless of any external protection means.

The power level (15 Watts) cited in the original publication of this standard as the threshold below which ignition will not occur in normal ambient concentrations of oxygen was found to be significantly below the level used in IEC 61010-1 [22]. The original 15 W value was not based on any scientific test or research but came from "common practice" at some certification bodies (an anecdotal value only).

However, IEC 60950-1:2005 provides a variety of energy levels based on voltage ranging from 100 VA to 150 VA. For purposes of simplicity, the lowest of these values (100 VA) with minimal restrictions on construction were used as an alternative to the 15 W limit (without construction restrictions) originally used in this standard for ME EQUIPMENT in general.

Direct application of the requirements for limited energy circuits in IEC 60950-1:2005 can also be considered to assure that the RISK of fire has been reduced to acceptable levels at higher energies to demonstrate equivalent safety as well.

Since facilities where ME EQUIPMENT compliant with this standard is used will also contain information technology equipment and such equipment can be part of ME EQUIPMENT or ME SYSTEMS, it would be unreasonable to require the ME EQUIPMENT to offer a different level of protection against ignition than does the other equipment used in the same environment. Other end-product standards can provide an alternative means of protection against ignition.

--`,,`,,`-`-`,,`,,`,`,,`---
Copyright International Electrotechnical Commission
Provided by IHS Markit under license with IEC
No reproduction or networking permitted without license from IHS Not for Resale, 08/26/2020 19:12:41 MDT

It is felt that limiting the maximum temperatures for APPLIED PARTS to the NORMAL CONDITION values is appropriate because exceeding them is known to result in HARM and the PATIENT is frequently unable to pull away.

The restrictions of this subclause are regarded to be sufficient to avoid an enduring fire. A fire is not only dangerous by itself but has side effects such as destroying isolation barriers or destroying mechanical stability. These cannot be taken into account by the above limitations. Therefore, the MANUFACTURER needs to consider the following when coming to a conclusion:

– Obviously a limitation of 100 VA cannot guarantee 'no ignition'. Smaller components such as resistors, semiconductors etc. can be exposed to levels of power that could cause ignition. However, standards such as IEC 60950-1 and IEC 61010-1 and experience demonstrate that when such situations arise if the components are mounted on V-1 rated material an enduring fire is very unlikely to occur.

– Ignition could destroy isolation barriers exposing hazardous voltages. A device which is designed according to the requirements of this subclause should still be checked to determine whether such barriers would be affected and whether additional appropriate precautions independent of the requirements of this subclause.

Since no enduring fire will occur, the mechanical stability is regarded as maintained.

Subclause 13.1.2 Dashes 4 and 5

Interpretation Sheet 3 to IEC 60601-1 (IEC 60601-1:2005/ISH3:2013) allows surface temperatures up to 105 °C in SINGLE FAULT CONDITION under some circumstances. This is not considered appropriate for all type of materials, e.g. metal. Therefore, the requirement for maximum temperatures in SINGLE FAULT CONDITION for ACCESSIBLE PARTS are partially based on the state-of-the art standard IEC 62368-1:2018.

The test condition is different in IEC 62368-1:2018, where the limits are based on 25 °C ambient temperature, rather than the maximum specified ambient temperature. Based on review of ISO 13732-1:2006 [81], the temperature limits extracted from IEC 62368-1:2018 should be applied regardless of ambient temperature, since accepting higher surface temperatures could lead to a potential burn HAZARD resulting in an unacceptable HARM.

For the same reason, the limit for glass, porcelain and vitreous material has been set to 90 °C (instead of 95 °C) in this standard.

Subclause 13.2.9 – Interruption and short circuiting of motor capacitors

The effect of functioning centrifugal switches can be taken into account. A locked rotor condition is specified because some capacitor motors might or might not start, causing variable results. Capacitor voltage is checked to assure that its dielectric will not be stressed causing the accumulation of hazardous gases including hydrogen.

While the short circuit or open circuit of the capacitor is a SINGLE FAULT CONDITION and locking of the rotor is also a SINGLE FAULT CONDITION (see 13.2.8) this is regarded as an instance of the situation referred to in 4.7, where one SINGLE FAULT CONDITION can result unavoidably in another SINGLE FAULT CONDITION and the two failures are considered as one SINGLE FAULT CONDITION.

Subclause 13.2.10 – Additional test criteria for motor operated ME EQUIPMENT and Table 26, last line

Temperature limits of motor windings in ME EQUIPMENT are determined after the first hour as an arithmetic average because experience of test houses has shown that ME EQUIPMENT for non-CONTINUOUS OPERATION reaches variable values that could temporarily differ from the maximum values. Therefore, lower temperature limits are required. The values in Table 26 are based on the requirements of IEC 60950-1:2005.

Copyright International Electrotechnical Commission
Provided by IHS Markit under license with IEC
No reproduction or networking permitted without license from IHS Not for Resale, 08/26/2020 19:12:41 MDT

Subclause 13.2.13.1 – General overload test conditions

The ball pressure test is not intended to represent the exact conditions experienced in use. The test is performed at elevated temperatures to test the robustness (adequate safety factor) of the mechanical properties of the insulation. The principle is not unlike dielectric withstand testing which subjects insulation to voltages far in excess of those seen in use.

Subclause 13.2.13.4 – ME EQUIPMENT RATED for non-CONTINUOUS OPERATION

Where ME EQUIPMENT or parts thereof are RATED for non-CONTINUOUS OPERATION but controls allow OPERATORS to leave it in operation (should a medical or other emergency occur), the CONTINUOUS OPERATION of the ME EQUIPMENT is considered reasonably foreseeable misuse. Where safety is dependent on switching the ME EQUIPMENT or parts thereof off after a prescribed period, steps should be taken to assure that intentional action is not required to do so.

Clause 14 – PROGRAMMABLE ELECTRICAL MEDICAL SYSTEMS (PEMS)

Computers are increasingly used in ME EQUIPMENT, often in safety-critical roles. The use of computing technologies increases the level of complexity in ME EQUIPMENT. This complexity means that systematic failures can escape the practical limits of testing. Accordingly, this clause goes beyond traditional test and measurement of the finished ME EQUIPMENT and includes requirements for the PROCESSES by which it is developed. Testing of the finished product is not, by itself, adequate to address the safety of PROGRAMMABLE MEDICAL ELECTRICAL SYSTEMS.

For these reasons, this clause requires that a PROCESS with specific elements be established and followed. The intention is to establish these specific PROCESS elements, leaving the user of this clause to determine in detail how to accomplish them. This is similar to the approach taken in the ISO 9000 series. Because users of this clause are expected to be qualified to perform the identified activities, detail has been kept to a minimum.

While iteration of some elements of the PROCESS is expected, no specific requirements to do so have been included. These requirements were omitted because the need to repeat PROCESSES or portions of them is unique to each particular device. In addition, the need for such iteration will arise from the more detailed understanding that emerges during the design PROCESS.

Because users of this standard are required to establish, maintain and apply a RISK MANAGEMENT PROCESS as part of compliance, this clause establishes those characteristics unique to programmable systems that should be considered as part of that PROCESS. Requirements for development and modification of medical device software have been specified in IEC 62304. The requirements from IEC 62304 that apply to development prior to placing a product in service are included by reference for the PEMS software.

There are some requirements in IEC 62304 that apply to software maintenance after a product has been placed into service. These requirements have not been included in the reference.

The effective application of Clause 14 will require, subject to the task in hand, competence in the following:

– application of the specific ME EQUIPMENT with emphasis on safety considerations;
– ME EQUIPMENT development PROCESS;
– methods by which safety is assured;
– techniques of RISK ANALYSIS and RISK CONTROL.

Requirements have been minimized to those that are essential to assuring BASIC SAFETY and ESSENTIAL PERFORMANCE. This has been done in recognition of the extensive and growing literature in the fields of software assurance and RISK ASSESSMENT techniques as well as the rapid evolution of this discipline.

Copyright International Electrotechnical Commission
Provided by IHS Markit under license with IEC
No reproduction or networking permitted without license from IHS Not for Resale, 08/26/2020 19:12:41 MDT

Subclause 14.1 – General

This standard requires the application of a RISK MANAGEMENT PROCESS in accordance with ISO 14971. This is particularly relevant to PEMS, because of the difficulty of showing the correctness of software or complex hardware. Therefore the design of a PEMS has to be performed within a RISK MANAGEMENT PROCESS, in which RISK CONTROL measures are related to the RISKS being controlled. For a software PESS, the software safety requirements from subclause 4.3 of IEC 62304:2006 and IEC 62304:2006/AMD1:2015 and the software RISK MANAGEMENT requirements from Clause 7 of IEC 62304:2006 and IEC 62304:2006/AMD1:2015 are included. If the application of RISK MANAGEMENT shows that a PESS has the potential to contribute to a HAZARDOUS SITUATION, and non-software RISK CONTROL measures external to the PESS have not reduced the RISK to an acceptable level, Clause 14 adds extra RISK MANAGEMENT and life-cycle PROCESSES for the PEMS.

Compliance VERIFICATION requires the MANUFACTURER'S internal assessment to cover not only the requirements of this clause but also those of IEC 62304 that have been included by reference.

Compliance with the requirements of Clause 14 is judged by examining the documentation produced by the PROCESSES required in the various subclauses.

The concept of assessment has been introduced in the compliance statement to allow for methods other than inspection where necessary, such as audit. Thus, although there is no general requirement for the MANUFACTURER to operate a quality management system in accordance with ISO 13485 [30], certain features of such a system are necessary. One feature that is commonly regarded as essential for a quality management system to be effective is a PROCESS of audit and review performed within the organisation to confirm that it is actually following its own PROCEDURES; this is separate from any external assessment that could be performed to demonstrate compliance with standards or regulatory requirements. This standard, therefore, requires that the MANUFACTURER not only document certain aspects of the design PROCESS but also carry out an assessment to confirm that the requirements of this clause have been followed.

Subclause 14.2 – Documentation

The expected way by which compliance with PROCESS requirements can be determined is by assuring that the documentation required for each PROCESS step has been generated. While most of the requirements of 4.2 are crucial components of an adequate software life-cycle, Clause 14 contains many additional PROCESS steps not required by 4.2. Therefore, the documentation that these additional PROCESS steps (in Clause 14) require is necessary for a certification body to determine that the PROCESS steps have been performed.

Because Clause 14 addresses those RISKS associated with PEMS, this documentation is part of the RISK MANAGEMENT FILE.

Since compliance with Clause 14 is determined by inspection and assessment to assure that the required documentation has been generated, the quality and accuracy of these documents is important. Because demonstration of the safety of a PEMS depends on documentation, an effective system is needed to ensure the integrity of the documentation and, if different versions of a document exist, to identify the applicability of each version. Therefore it is required that the documents be generated, revised and maintained under a formal document control system. MANUFACTURERS should assure that this documentation is clear and comprehensive to assist in the assessment PROCESS.

Subclause 14.3 – RISK MANAGEMENT plan

Subclause 4.2.2 requires that a RISK MANAGEMENT plan be prepared and maintained in the RISK MANAGEMENT FILE.

In addition to elements of the RISK MANAGEMENT plan required by 4.2.2, a PEMS VALIDATION plan is required because validation is seen as a necessary activity when developing a PEMS.

Copyright International Electrotechnical Commission
Provided by IHS Markit under license with IEC
No reproduction or networking permitted without license from IHS Not for Resale, 08/26/2020 19:12:41 MDT

Subclause 14.4 – PEMS DEVELOPMENT LIFE-CYCLE

A documented life-cycle helps ensure that safety issues are considered throughout a product's development. This is important for all products and it is vital for PEMS. Safety cannot be added to a PEMS after it has been developed. Two reasons for this are as follows.

a) The actual PROCESSES used in the development of a PEMS, and the quality and rigour of those PROCESSES, are decided as a result of RISK ASSESSMENT. If it is discovered later on that inappropriate PROCESSES were used or that inadequate quality and rigour were applied, then the development will have to be repeated with correct PROCESSES.

b) Changes made at a late stage in the PEMS DEVELOPMENT LIFE-CYCLE are likely to be expensive (both in time and money). This is particularly true if a system requirement is incorrect or missing. System architecture can also be vulnerable to late changes. Often, the architecture is part of the safety case. Late changes can require significant rework in order to maintain the integrity of an architectural solution.

Framework

A life-cycle for the development of a product provides a framework that allows the necessary safety activities to take place in a timely and systematic manner. It should not impose unnecessary restrictions and it should ensure that all the required safety activities take place. The life-cycle needs to be decided early. Different life-cycle models are acceptable. Clause H.2 explains PEMS DEVELOPMENT LIFE-CYCLES in more detail. Clauses 5, 7, 8 and 9 of IEC 62304:2006 and IEC 62304:2006/AMD1:2015 describe the PROCESSES to be included in the software development life-cycle for the development of safe medical device software.

Milestones and activities

The requirement for milestones, and activities with inputs and outputs for each, ensures that due consideration is given to:

– the activities,

– what needs to be done before the activity can start, and

– what the activity needs to provide,

so that VERIFICATION of the results can be performed.

The sequence of activities in the life-cycle is required to be defined in terms of milestones because this offers the greatest flexibility to the MANUFACTURER. No requirement is made concerning the number or nature of the milestones, nor is there any implication that all project activities have to pass through the milestones simultaneously. This standard has not used the term "phases" although this term was used in IEC 60601-1-4 [14]. The term has been avoided because it is difficult to express concurrency and overlap in a phase model.

In a good life-cycle:

– the necessary activities are defined in advance of their performance;

– the PROCESSES used in development activities could be specified as an outcome of RISK MANAGEMENT;

– the sequence of activities is defined so as to ensure that necessary inputs to an activity are available before the activity starts;

– criteria are defined for deciding whether the activity has been satisfactorily completed; and

– accountability is facilitated.

Activities are defined in terms of inputs and outputs because it is simple to measure whether those inputs and outputs exist. The MANUFACTURER is responsible for deciding how the milestones are achieved and how the required documentation is produced.

In order to determine whether each activity has been satisfactorily completed, it is required that the criteria for VERIFICATION of each activity be defined. VERIFICATION examines whether

Copyright International Electrotechnical Commission
Provided by IHS Markit under license with IEC
No reproduction or networking permitted without license from IHS Not for Resale, 08/26/2020 19:12:41 MDT

the inputs have been transformed into the outputs completely, correctly and according to the required PROCESS. No requirement is made concerning the type or extent of VERIFICATION, except for VERIFICATION of RISK CONTROL measures and ESSENTIAL PERFORMANCE (see 14.10).

Subclause 14.5 – Problem resolution

Where appropriate, a documented system for problem resolution is required by this standard.

Problems can arise:

– with the product;
– within a PROCESS;
– between PROCESSES.

Examples of problems are:

– inconsistent requirements;
– ambiguous requirements;
– missing specifications;
– coding errors;
– incorrect operation of the PEMS.

A system for problem resolution is needed to ensure that when a problem arises, its impact on HAZARDS and their consequent RISK is managed. Ad hoc methods for resolving problems can undermine the benefits obtained by using a systematic life-cycle approach. An appropriate place to document the system for problem resolution is as part of the PEMS DEVELOPMENT LIFE-CYCLE.

Subclause 14.6.1 – Identification of known and foreseeable HAZARDS

PEMS have extra initiating causes for HAZARDS.

Subclause 14.6.2 – RISK CONTROL

As the choice of the PROCEDURES and tools used by a MANUFACTURER for the development of a PEMS will be influenced by many factors, this subclause requires that one of the factors for the choice is the RISK reduction required for the RISK CONTROL measure. A RISK CONTROL measure that is developed using PROCEDURES and tools that are known to be good is more likely to carry out its intended functions than one developed using PROCEDURES and tools that are of unknown quality.

Subclause 14.7 – Requirement specification

RISK CONTROL measures are used to control the RISK of identified HAZARDS. The requirements for these measures are documented in requirement specifications. The requirement should both specify what the measure does and how well it does it. Subclause 4.2 does not demand a requirements specification.

Verifiable requirements

Requirements should be verifiable. This applies to both the function of the RISK CONTROL measure and how likely it is to perform correctly. Quantitative VERIFICATION of failure rates is, generally, impractical for software. VERIFICATION of a qualitative approach would be by verifying that the appropriate PROCESSES were used.

Identifiable safety requirements

The requirement to distinguish the RISK CONTROL measures and ESSENTIAL PERFORMANCE is needed to ensure that they are implemented and to ensure that if there is a need to change

Copyright International Electrotechnical Commission
Provided by IHS Markit under license with IEC
No reproduction or networking permitted without license from IHS Not for Resale, 08/26/2020 19:12:41 MDT

the ESSENTIAL PERFORMANCE or a RISK CONTROL measure, the impact of the change on the RESIDUAL RISK can be assessed.

Decomposition

Examples of a PEMS structure are shown in Annex H. Requirements to implement the RISK CONTROL measures should be specified for the PEMS and for any PESS that implements or partially implements one or more RISK CONTROL measure. This can be in a single document or in several documents.

Subclause 14.8 – Architecture

An architecture specification is not required by 4.2. It is an additional requirement for PEMS because:

– often the architecture chosen will be part of a RISK CONTROL measure. RISK CONTROL measures need to be explicit for complex systems such as a PEMS;

– architecture specifications are recognized as a necessary part of a good software development PROCESS such as is required for a PEMS.

There is a list of architecture features for inclusion in the specification where appropriate. This list has been selected because in particular circumstances one or more of the features could be used to control the RISK of a HAZARD. For example, the use of a COMPONENT WITH HIGH-INTEGRITY CHARACTERISTICS will effectively remove any RISK that would result from the failure of that component.

Subclause 14.8 e)

Partitioning of functionality can be useful when there is a significant need for rigorous safety validation of PEMS.

The software (firmware and application layers) is distinctly divided into critical, non-critical and supervisory sections. Partitioning is used so that the instructions and data of the critical, non-critical and supervisory sections do not interfere with each other and that there is separation of duties among the sections of the software. If there is no separation of duties among the sections of the software, all software should be defined as critical, to make sure that the analysis has taken into consideration the critical section of the software.

Requirements for separating critical code from non-critical code include RISK ASSESSMENT of the entire system, RISK CONTROL strategies employed, analysis of physical resources and an analysis of logical properties (e.g., control and data coupling). In general, partitioning should separate and isolate the safety-related functionality from the non-safety-related functionality in the design and implementation. This PROCESS can minimize, or at least reduce, the VERIFICATION necessary to assure that data shared by or passed to the critical section does not affect the specified operation of the safety critical code.

Partitioning includes the following steps:

a) identification of critical, non-critical and supervisory sections. The means of identification depends upon the modularity of the code, the programming language, the code design and other specification attributes;

b) description of the interfaces between the critical and non-critical sections:

   1) identification of data or variables global to the critical and non-critical sections, modules, etc., identified in step a);

   2) identification of any parameters that are passed between critical and non-critical sections, modules, etc., identified in step a);

   3) description of the flow of the data, variables or parameters identified in steps b) 1) and b) 2);

--`,,```,,,,````-`-`,,`,,`,`,,`---

Copyright International Electrotechnical Commission
Provided by IHS Markit under license with IEC
No reproduction or networking permitted without license from IHS Not for Resale, 08/26/2020 19:12:41 MDT

4) description of the mechanism which is used to prevent data corruption, overwriting or other errors of the above identified data, variables or parameters which would affect safety critical performance;

c) validation of the integrity of the partition. This can be accomplished by functional testing and stress testing techniques.

Subclause 14.8 g) to n)

There is a list of items to be taken into consideration in the architecture specification. This list has been selected because each of these items could influence the choice of architecture.

Subclause 14.9 – Design and implementation

The technical solutions chosen need to be defined. It is often appropriate to decompose a PEMS into subsystems. Figure H.1 shows examples of PEMS/ PESS structures with different amounts of decomposition. Reasons for decomposing a PEMS could include the following.

Keeping the complexity of subsystems manageable

The less complex the system the easier it is to understand and consequently easier to design and then maintain. The resulting design is more likely to be correct and easier to test. Coding standards should specify limits for complexity.

Architecture

The system architecture could make it logical to separate systems e.g. if diverse systems are needed they should be implemented as distinct subsystems.

Modularity

Modularity can facilitate the provision of different system options, reuse of an existing proven subsystem and the extension of system functionality.

Physical components

A sensible division of physical subsystems will help the diagnosis and repair of hardware faults.

Different technologies

Often different engineers will implement the hardware and the software design. In this case specifying each as a separate subsystem will enable each to be implemented independently.

The overall system will only function correctly if each of its constituent subsystems has been adequately specified. This leads to the requirement for a design specification for each subsystem. A design specification for a subsystem would typically include a detailed interface specification, and could include implementation details, e.g. algorithms.

Each subsystem should be tested to show that the design specification has been correctly implemented. This leads to the requirement for a test specification for each subsystem.

The design and test specifications can be documented in whatever form is practicable, e.g. they can be separate documents or they can be combined in a larger document. The design specification and the test specification for each subsystem should be identifiable.

Examples of the elements of the design environment are given in H.4 a). Such elements will have an influence on the quality and correctness of the design. Some elements will have been identified as the suitably validated tools and PROCEDURES (see 14.6.2). The descriptive data regarding the design environment facilitates VERIFICATION that the suitably validated tools and PROCEDURES have been used.

--`,,```,,,,````-`-`,,`,,`,`,,`---

Copyright International Electrotechnical Commission
Provided by IHS Markit under license with IEC
No reproduction or networking permitted without license from IHS Not for Resale, 08/26/2020 19:12:41 MDT

Subclause 14.10 – VERIFICATION

Subclause 4.2 requires VERIFICATION of RISK CONTROL measures. There are additional requirements for PEMS. These are that:

– the ESSENTIAL PERFORMANCE is verified; and

– there is a VERIFICATION plan.

ESSENTIAL PERFORMANCE is significant for PEMS because the PEMS uses a PESS to control its functions. ESSENTIAL PERFORMANCE will often depend on the PEMS functions being carried out correctly.

A VERIFICATION plan leaves it up to the MANUFACTURER how to achieve the requirements of this clause. This is a better and more flexible approach than specifying how to verify a PEMS in this clause. The MANUFACTURER is responsible for planning the VERIFICATION so that it is adequately thorough and then to implement the plan.

The requirement lists activities that affect the thoroughness of the VERIFICATION and which need to be planned.

Subclause 14.11 – PEMS VALIDATION

The final phase of any PEMS DEVELOPMENT LIFE-CYCLE model is PEMS VALIDATION. PEMS VALIDATION is intended to assure that the right product is built. Validation is important for PEMS because unexpected interactions between functions might occur that can only be discovered by validation.

PEMS VALIDATION can include tests for a high volume of data, heavy loads or stresses, human factors, security, performance, configuration compatibility, fault testing, documentation and safety.

Independence is needed to avoid conflicts of interest and because the assumptions of the designer should not influence or limit the extent of the PEMS VALIDATION. Examples of level of independence include:

– separate person;

– separate management;

– separate organization.

Subclause 14.12 – Modification

Typically the design of a PEMS is not completely new but is partly or even largely derived from earlier design(s). Nevertheless, it might be possible to treat the design as if it were completely new and to establish the RISK MANAGEMENT report and demonstrate compliance with the requirements of this standard without reference to previous documentation. If however the RISK MANAGEMENT report does need to include some information from the documentation of the previous design(s), it is then necessary to confirm that all such information remains valid despite the changes introduced in the new design.

Subclause 14.13 – PEMS intended to be incorporated into an IT-NETWORK

Many hospitals are operating ME EQUIPMENT in a networked environment today. Originally, these IT-NETWORKS were installed to optimize business economic and technical area. For this, a fast electronic data interchange is required. Today, these IT-NETWORKS are used for medical applications within the hospital, between hospitals, and from home.

Initially, the use was only the exchange of laboratory data. Now there are large amounts of data transported over the IT-NETWORKS, such as medical image data. There are further requests from the user to get “real time” solutions (e.g. control of operation robots via an IT-NETWORK).

Additional guidance on incorporation of a PEMS into an IT-NETWORK is found in Annex H.

Copyright International Electrotechnical Commission
Provided by IHS Markit under license with IEC
No reproduction or networking permitted without license from IHS Not for Resale, 08/26/2020 19:12:41 MDT

Subclause 15.1– Arrangements of controls and indicators of ME EQUIPMENT

Controls, instruments, indicating lamps, etc. that are associated with a specific function of the ME EQUIPMENT should be grouped together.

Subclause 15.2 – Serviceability

The exchange of such parts is expected to be easy to perform, preferably without special TOOLS. In addition, the disassembly of the worn out part or of the part exchanged preventively and the assembly of the spare one should not result in a HAZARDOUS SITUATION. To ensure this, the instructions for performing such activities have to be easy to understand and to follow, without introducing any RISK of mix-up.

Subclause 15.3.2 – Push test

ENCLOSURES need to have adequate rigidity if they are to maintain a level of protection from internal live parts. This requirement is harmonized with the force test of IEC 60950-1:2005. The force is dependent on the person handling the ME EQUIPMENT, not the weight of the ME EQUIPMENT. In most cases, the application of a force of 250 N is considered reasonably foreseeable. However there can be cases where a RISK ASSESSMENT finds that the 45 N force applied over an area of 625 mm^2, as required by the second edition of this standard, would continue to be an acceptable VERIFICATION method for determining an acceptable level of RISK. For example, ultrasound transducers and similar small HAND-HELD APPLIED PARTS, which balance the needs of robustness with other needs relating to efficacy and biocompatibility,have established track RECORDS of safety and effectiveness over many years, and therefore could continue to use the older VERIFICATION test.

Internal components are not subjected to the force test of IEC 60950-1 because their robustness is verified per the tests of 15.3.4 and 15.3.5.

Subclause 15.3.3 – Impact test

An ENCLOSURE'S resistance to impact is required to prevent unacceptable RISK during reasonably foreseeable misuse. The energy of the test impact approximates ME EQUIPMENT being accidentally struck by an object in the hand of a passer-by or by a broomstick or mop handle during cleaning of the floor. The test equipment has been simplified and harmonized with other standards containing ENCLOSURE impact requirements, including IEC 60950-1.

Where a MANUFACTURER feels the requirements of this subclause are not necessary to mitigate an unacceptable RISK, justification is documented in the RISK MANAGEMENT FILE per 4.5, along with an identification of alternate requirements met. For example, FIXED ME EQUIPMENT can have one side of the ENCLOSURE protected by the floor, wall or ceiling. The MANUFACTURER documents the evaluation of the probability that the ME EQUIPMENT could be moved or installed incorrectly. The MANUFACTURER also evaluates and identifies, through the RISK MANAGEMENT PROCESS, what resistance to impact the protected side of the ENCLOSURE needs to have to ensure no unacceptable RISKS are generated by failure to comply with the original requirements of this subclause.

Subclause 15.3.4 – Drop test

The tests for HAND-HELD ME EQUIPMENT or its parts that are hand held are different from the test for PORTABLE and MOBILE ME EQUIPMENT because of the difference in practical application.

A drop surface of wood of density > 600 kg/m^3 allows selection of most common hardwoods. Oak, beech, birch, ash and maple are acceptable. These varieties have similar hardness while hardwoods of density < 600 kg/m^3 (e.g. mahogany, elm, sweet gum, cherry) and softwoods have greatly decreased hardness in comparison.

Subclause 15.3.4.2 – PORTABLE ME EQUIPMENT

This test represents NORMAL USE, as explained in the rationale for 15.3.5. This test is not intended to represent reasonably foreseeable misuse. There is not currently a test that directly addresses free fall type reasonably foreseeable misuse, however it is felt the ball

Copyright International Electrotechnical Commission
Provided by IHS Markit under license with IEC
No reproduction or networking permitted without license from IHS Not for Resale, 08/26/2020 19:12:41 MDT

impact test in 15.3.3 represents foreseeable misuse, albeit indirectly. As stated in 4.2, if the RISK MANAGEMENT PROCESS concludes that a more severe test is appropriate, this should be done.

Subclause 15.3.5 – Rough handling test

Contrary to what is often assumed, ME EQUIPMENT can be used in a hostile environment. In case of emergency, ME EQUIPMENT is carried or wheeled on trolleys over doorsteps and into elevators and subjected to bumps and vibration. Such conditions can in fact typify NORMAL USE for some ME EQUIPMENT. Encountering obstacles is considered commonplace and quite reasonably foreseeable misuse. Not all obstacles are clearly marked and the OPERATOR cannot always stop the ME EQUIPMENT in time after having become aware of the obstacle

The 0,8 m/s speed together with the severity of the obstacles chosen, are considered to represent worst case reasonably foreseeable misuse levels of stress/shock energies. The intent of tis test is to ascertain the risks from damage caused by rough handling shock/stress. Instability is evaluated in 9.4.

The meaning of “in its normal direction of travel” is the direction(s) the ME EQUIPMENT is likely to travel at the maximum normal speed. For most cases, this would be the forward direction. Some ME EQUIPMENT, such as a bed, is likely to travel in a forward or backward direction, at normal speed, and therefore each test should be considered for each direction.

Subclause 15.3.6 – Mould stress relief test

Many thermoforming PROCESSES can leave residual stresses in plastics. Because polymer chains are held together by weak van der Waals bonds, these residual stresses can result in viscous flow (deformation). Elevated temperature results in weakening of van der Waals bonds and an increase in the rate of viscous flow. Thermoplastics with low melting temperatures, such as polyethylene and polypropylene, are more susceptible to stress relief deformation than polymers with higher melting temperatures, such as polycarbonate and polyetheramide.

Compliance should be verified by analysis of the polymer properties, when possible. This VERIFICATION should consist of a documented comparison of the maximum temperature the polymer will be exposed to in NORMAL USE and the polymer manufacturer’s recommended temperature use range.

Subclause 15.3.7 – Environmental influences

a) ME EQUIPMENT is often used or stored in environmental conditions that are within the INTENDED USE as declared by the MANUFACTER. In such cases no HAZARD is expected. However the environmental conditions could differ from those declared and still the ME EQUIPMENT is expected to remain safe. To ensure this, the RESPONSIBLE ORGANISATION has to perform the periodic inspection and maintenance prescribed by the MANUFACTURER. These activities are expected to prevent any deterioration of the safety level and also detect signs of commencing of any such deterioration. To ensure this, the instructions for preventive maintenance have to be easy to understand and to follow, without introducing any RISK for mix-ups or for overlooking of safety-relevant symptoms.

b) The exchange of such parts is expected to be easy to perform, preferably without special TOOLS. In addition, the disassembly of the worn out part or of the part exchanged preventively and the assembly of the spare one should not create a HAZARD. To ensure this, the instructions for performing such activities have to be easy to understand and to follow, without introducing any RISK of mix-up.

c) Corrosion of metal to metal interfaces should be taken into account.

Subclause 15.4.3 – Batteries

If a HAZARDOUS SITUATION might develop as a result of exhaustion of the battery, means should be provided to forewarn of this condition.

Copyright International Electrotechnical Commission
Provided by IHS Markit under license with IEC
No reproduction or networking permitted without license from IHS Not for Resale, 08/26/2020 19:12:41 MDT

Where appropriate, particular standards should specify the corresponding requirement.

Subclause 15.4.3.5 – Excessive current and voltage protection

Subclause 4.7 requires the ME EQUIPMENT to be SINGLE FAULT SAFE. One possible fault could be the bridging of a CREEPAGE DISTANCE between the positive and negative terminals of an INTERNAL ELECTRICAL POWER SOURCE in the area between the INTERNAL ELECTRICAL POWER SOURCE and any protective device (see Figure A.23).

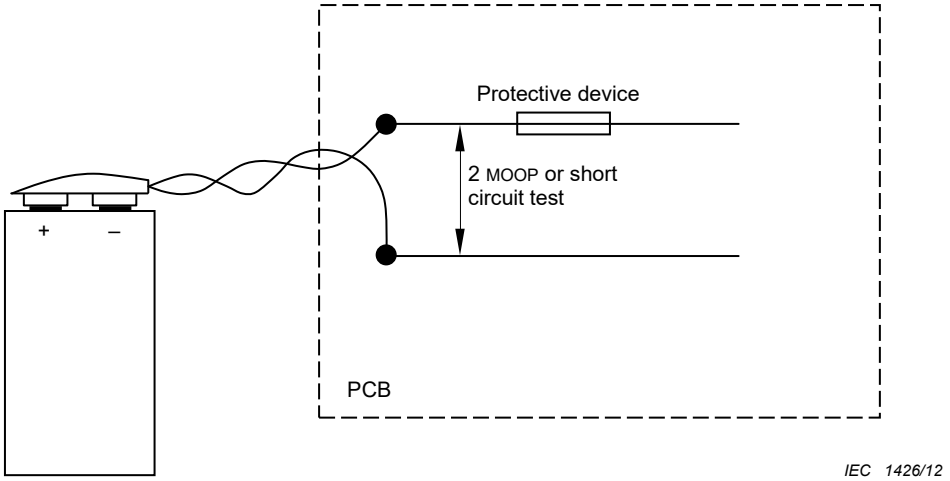

Figure A.23 – Example of the needed MEANS OF OPERATOR PROTECTION between the terminals of an INTERNAL ELECTRICAL POWER SOURCE and a subsequent protective device

A short circuit test would be required to demonstrate that this area is SINGLE FAULT SAFE unless two MEANS OF OPERATOR PROTECTION are present. In that case, the test can be omitted.

Subclause 15.4.4 – Indicators

It is important for an OPERATOR and SERVICE PERSONNEL to be able to determine the functional status of ME EQUIPMENT. In NORMAL USE, the OPERATOR needs to be able to distinguish between ME EQUIPMENT in stand-by and ME EQUIPMENT in a fully functional state. Some ME EQUIPMENT has an extended warm-up period. Other ME EQUIPMENT has standby or battery charging modes.

It can be hazardous for ME EQUIPMENT to be left unattended in the wrong state. SERVICE PERSONNEL need to be able to determine when ME EQUIPMENT is energized to avoid HAZARDS.

Subclause 15.4.7.3 – Entry of liquids

The former IPX8 rating requirement for foot switches amounts to no more than “greater protection than IPX7.” By making this requirement IPX6 minimum, the requirement sets a defined level of protection while allowing higher levels where appropriate.

For equipment used on the floor in areas where liquids are usually not found, the IPX1 requirement is included because it is considered extremely likely that some wetting will occur.

Subclause 15.5 – MAINS SUPPLY TRANSFORMERS of ME EQUIPMENT and transformers providing separation in accordance with 8.5

The addition of “and transformers providing separation in accordance with 8.5” to the original title that only identified “Mains transformers” is intentional. The tests for transformers should be utilized any time that the transformer is used to establish separation between OPERATORS, PATIENTS, etc. and a HAZARD.

Copyright International Electrotechnical Commission
Provided by IHS Markit under license with IEC
No reproduction or networking permitted without license from IHS Not for Resale, 08/26/2020 19:12:41 MDT

Revisions to 15.5 do not change significantly current methods (including those of the second edition of this standard) of testing. The methods and requirements were simplified and now include all different types of protectors like: PTCs, feedback control (switch mode power supplies), primary or secondary over-current devices, etc. Those transformers that have not been tested in accordance with the 5X frequency and 5X voltage tests of 15.5.2 to establish the adequacy of insulation between the turns of a winding that are shorted at the terminals (rather than external to the transformer) to assure that failure of that insulation will not cause maximum allowable temperatures to be exceeded.

Because of the difficulties that would be encountered when trying to test transformers that are RATED for high frequencies (such as those used in switch mode power supplies), the 2X frequency and voltage tests are specified in those cases as well. The second edition only applied this test where the voltage exceeded 500 V.

Subclause 15.5.1.1 – Transformers

Output windings are required to be “tested in turn” because under overload conditions, testing all windings simultaneously can cause over temperature devices to operate which would not operate if only one winding was being overloaded. A single output winding being overloaded is actually quite likely. Therefore this combination of conditions is considered the likely worst case scenario.

The intent of the requirement is to test under the worst-case condition (nearly always with either a full load or no-load). Such a worst case can be determined through evaluation of the transformer design or by performing a few spot tests. Generally, testing all possible conditions to determine worst case is unnecessary.

The limits of Table 31 are applied at a 25 °C ambient because of the impracticality of performing the overload and short tests inside of a thermal chamber.

Subclause 15.5.2 – Dielectric strength

It is necessary to raise the frequency of the test voltage in proportion to the voltage to prevent saturation of the magnetic core and consequent very high current.

The electrical insulation between the primary winding and other windings, screens and the core of a MAINS SUPPLY TRANSFORMER is presumed to have been investigated by the dielectric strength tests performed on the assembled ME EQUIPMENT as described in 8.8.3. The dielectric strength tests of 8.8.3 need not be repeated.

Subclause 15.5.3 – Construction of transformers used to provide separation as required by 8.5

The original citation of subclause 5.12 of IEC 61558-1 was made incorrect by modifications to the 61558 series. In reviewing the revised IEC 61558 standards, it was determined that citation of the standard would not reduce the cost of transformers or provide any other benefits since the spacing and dielectric requirements of IEC 60601-1 would be required to be applied to provide MEANS OF PATIENT PROTECTION. For this reason, the citation was deleted, and the principles of the second edition of IEC 60601-1 were employed with reference to spacing and dielectric requirements of the third edition. Where only MEANS OF OPERATOR PROTECTION is required, transformers constructed for use in IEC 60950-1 equipment should be considered acceptable.

Additionally, Annex U of IEC 60950-1:2005, IEC 60950-1:2005/AMD1:2009 and IEC 60950-1/AMD2:2013 includes requirements relating to the use of triple-insulated winding wire in transformers instead of a separate layer of insulation between windings (as would be traditionally be provided by bobbins for example). Transformers which use this method of separation between windings and which comply with all other requirements of this standard should generally be considered to provide an adequate level of BASIC SAFETY.

It was noticed during the evaluation, that transformers complying with IEC 62368-1:2018, will use FIW (fully insulated winding wire) instead of TIW (triple-insulated winding wire). As a result of the comparison, it was considered that the use of this FIW is acceptable for MEANS OF

--`,,```,,,,````-`-`,,`,,`,`,,`---

Copyright International Electrotechnical Commission
Provided by IHS Markit under license with IEC
No reproduction or networking permitted without license from IHS Not for Resale, 08/26/2020 19:12:41 MDT

OPERATOR PROTECTION (MOOP) only. The use of FIW as MEANS OF PATIENT PROTECTION (MOPP) needs further investigation during the development of the fourth edition before an alternative test method to comply with the requirements for MOPP can be implemented in the normative text of Annex L.

Clause 16 – ME SYSTEMS

Increasingly, ME EQUIPMENT is being combined with other pieces of equipment that might not have originally been intended for medical application to create systems where one or more of the elements of the system come into contact with the PATIENT. Clause 16 provides requirements to ensure the safety of the PATIENT who could come into contact with ME SYSTEMS.

Clause 16 on ME SYSTEMS is intended to be used by MANUFACTURERS of combinations of electrical equipment that include one or more items of ME EQUIPMENT. The equipment can be separate items or can be in a single ENCLOSURE or a combination of these cases.

Clause 16 is also intended to be used by personnel from institutions for medical practice who assemble or adapt ME SYSTEMS, as they can become the MANUFACTURER by that action. In this case, engineering expertise in the application of the electrical equipment design standards is required to ensure that the ME SYSTEM complies with all requirements of Clause 16.

More and more, such ME SYSTEMS comprise equipment originally manufactured for use in different specific application fields, not necessarily medical, that are connected with each other in a direct or indirect way. ME EQUIPMENT complying with this standard can be connected with other, non-ME EQUIPMENT. The latter equipment might fully meet the requirements in the safety standards applicable in their specific application field. However, they do not always comply with the safety requirements for ME EQUIPMENT and, thereby, influence the safety of the whole ME SYSTEM. It is for this reason that the MANUFACTURER is required to apply RISK MANAGEMENT to the whole ME SYSTEM. One example of an additional HAZARD is the ignition of fire when an ME SYSTEM containing non-ME EQUIPMENT is used in an OXYGEN RICH ENVIRONMENT, possibly accidentally.

The electrical equipment can be situated either in a medically used room that is intended for diagnosis, treatment or monitoring of PATIENTS, or in a non-medically used room where no medical practice is performed. Within a medically used room, electrical equipment might be placed inside or outside a volume that is defined as PATIENT ENVIRONMENT.

There are two situations possible in medical practice.

a) Where Clause 16 does not apply

   Simultaneously operated ME EQUIPMENT, i.e. different ME EQUIPMENT connected at the same time to a PATIENT but not connected to each other. Such ME EQUIPMENT can influence each other. For example, high-frequency surgical equipment in the operating theatre can influence PATIENT monitoring.

   NOTE Assistance can be available from the instructions for use for each ME EQUIPMENT.

b) Where Clause 16 applies

   ME SYSTEMS, consisting of ME EQUIPMENT and possibly also non-ME EQUIPMENT, interconnected permanently or temporarily for a certain purpose such as diagnosis or treatment of a PATIENT. Examples: ME SYSTEMS for diagnostic X-ray examination, endoscopes with video camera, PATIENT monitoring, ultrasound equipment with a personal computer, computed tomography or magnetic resonance imaging.

   The various parts of such an ME SYSTEM could be situated within the PATIENT ENVIRONMENT or outside it but still within a medically used room, or parts of the ME SYSTEM could be located in a non-medically used room containing, for example, electrical power distribution or data processing equipment.

Copyright International Electrotechnical Commission
Provided by IHS Markit under license with IEC
No reproduction or networking permitted without license from IHS Not for Resale, 08/26/2020 19:12:41 MDT

Subclause 16.1 – General requirements for the ME SYSTEMS

The basic requirement for the safety of ME SYSTEMS is that, after installation or subsequent modification, an ME SYSTEM does not result in an unacceptable RISK. Compliance with the requirements imposed on ME SYSTEMS in this standard will imply that the RESIDUAL RISK is presumed to be acceptable, unless there is OBJECTIVE EVIDENCE to the contrary.

The MANUFACTURER of ME SYSTEMS that can be reconfigured by the OPERATOR or the RESPONSIBLE ORGANIZATION could be challenged to provide information on all possible combinations of the equipment, which could represent an unreasonable burden. RISK MANAGEMENT methods provide a very adequate means of determining which combination of items constitutes the largest RISKS, and which measures need to be taken to provide for the adequate level of safety. Ultimately, compliance testing can be done after assembly of the complete ME SYSTEM.

Appropriate documentation concerning the standards compliance can be a declaration of conformity by the MANUFACTURER or a certificate from a test house.

ME SYSTEMS, by their nature, can be frequently modified; Clause 16 does not apply to the modification of individual items in an ME SYSTEM

Subclause 16.2 – ACCOMPANYING DOCUMENTS of an ME SYSTEM

The documents that accompany an ME SYSTEM intended for DIRECT CARDIAC APPLICATION should provide data on such items as:

– use of rubber gloves;

– use of stop-cocks made of insulating material;

– minimum distances between PATIENT and equipment being part of the ME SYSTEM (PATIENT ENVIRONMENT);

– instructions about how to use the ME EQUIPMENT in the typical medical application, for example, use of a catheter.

For safety reasons, particular attention should be paid to the different levels of RISK when, within the PATIENT ENVIRONMENT, electrodes or other body sensors are used on the PATIENT, externally and internally, including direct connections to the heart.

Possible connections to the heart of a PATIENT should be kept isolated from the equipment.

The warning not to place MULTIPLE SOCKET-OUTLETS on the floor is to prevent the ingress of liquids and to prevent mechanical damage.

Furthermore, measures should be taken to ensure that, when assembling or modifying an ME SYSTEM incorporating MULTIPLE SOCKET-OUTLETS, these are mounted in such a way as to prevent ingress of liquids and to avoid mechanical damage during NORMAL USE and transportation.

Relevant safety standards for non-ME EQUIPMENT could specify or require disclosure of permissible environmental conditions. Accordingly, the environmental conditions permitted for various items in an ME SYSTEM can be different. The permissible environmental conditions for the ME SYSTEM is to be specified so that no HAZARDOUS SITUATION will arise when operating it within these specified limits.

Subclause 16.3 – Power supply

This requirement is to ensure the safety according to IEC 60601-1 at the ME SYSTEM level.

BASIC SAFETY after assembly is maintained, for example, by one or more of the following measures:

– measures that are built-in within the ME EQUIPMENT, for example, separation of relevant circuits;

– SEPARATION DEVICES provided as ACCESSORIES to the ME EQUIPMENT (see 16.5);

Copyright International Electrotechnical Commission
Provided by IHS Markit under license with IEC
No reproduction or networking permitted without license from IHS Not for Resale, 08/26/2020 19:12:41 MDT

– SEPARATION DEVICES provided as ACCESSORIES to the ME SYSTEM;

– separating transformer;

– additional PROTECTIVE EARTH CONDUCTORS.

Non-ME EQUIPMENT can provide the specified power supply for ME EQUIPMENT in accordance with 5.5 f), 7.9.2.14 and 8.2.1.

Subclause 16.5 – SEPARATION DEVICES

The BASIC SAFETY of some ME EQUIPMENT depends on the precondition that any SIGNAL INPUT/OUTPUT PARTS are connected only to equipment that is specified for this purpose, otherwise LEAKAGE CURRENTS could be increased by unwanted currents flowing through signal cables.

HAZARDOUS SITUATIONS could occur if the SIGNAL INPUT/OUTPUT PART of ME EQUIPMENT is connected to equipment outside the medically used room, possibly in another building and therefore connected to another mains supply branch circuit.

A SEPARATION DEVICE prevents a HAZARDOUS SITUATION to the PATIENT or OPERATOR. Additionally, the inclusion of the SEPARATION DEVICE helps to avoid HAZARDOUS SITUATIONS through malfunction of equipment caused by unwanted currents flowing through cables.

The need for a SEPARATION DEVICE depends on the configuration of the ME SYSTEM.

Subclause 16.6 – LEAKAGE CURRENTS

Relevant standards for some non-ME EQUIPMENT can have limits for TOUCH CURRENTS that are higher than required by Clause 16; these higher limits are acceptable only outside the PATIENT ENVIRONMENT. It is essential to reduce TOUCH CURRENTS when non-ME EQUIPMENT is to be used within the PATIENT ENVIRONMENT. LEAKAGE CURRENT reduction measures can include:

– additional PROTECTIVELY EARTHED parts;

– a separating transformer;

– an additional non-conductive ENCLOSURE.

Interconnecting cables and their connector housings are parts of the ENCLOSURE and therefore the LEAKAGE CURRENT limits within the PATIENT ENVIRONMENT, as required in 16.6.1, are applicable.

If a MULTIPLE SOCKET-OUTLET without a separating transformer is used, the interruption of its protective earthing could result in TOUCH CURRENTS equal to the sum of the individual EARTH LEAKAGE CURRENTS.

Subclause 16.6.3 – PATIENT LEAKAGE CURRENT

For ME EQUIPMENT, the maximum allowed values for PATIENT LEAKAGE CURRENT and total PATIENT LEAKAGE CURRENT (applicable with several APPLIED PARTS connected to the ME EQUIPMENT) are given in Table 3 and Table 4; see also 8.7.3. An ME SYSTEM is to provide the equivalent level of safety as provided by ME EQUIPMENT within the PATIENT ENVIRONMENT (see 16.1). Therefore, the same maximum values for PATIENT LEAKAGE CURRENT and total PATIENT LEAKAGE CURRENT apply, regardless whether the APPLIED PARTS are connected to the same element of the ME SYSTEM or not. This holds for the operation of the ME SYSTEM in NORMAL CONDITION, as the single fault concept is not applicable to an ME SYSTEM.

It should be noted that combinations of equipment or of APPLIED PARTS, made by the RESPONSIBLE ORGANIZATION or OPERATOR, that are outside the range of combinations indicated by the MANUFACTURER, could lead to HAZARDOUS SITUATIONS. This warning holds in particular when combinations of equipment are used for medical purposes on the same PATIENT, which have not been intended by their MANUFACTURER(S) to be used in such combinations.

--`,,```,,,,````-`-`,,`,,`,`,,`---
Copyright International Electrotechnical Commission
Provided by IHS Markit under license with IEC
No reproduction or networking permitted without license from IHS Not for Resale, 08/26/2020 19:12:41 MDT

Subclause 16.7 – Protection against MECHANICAL HAZARDS

Attention should be paid to the effects of interruptions causing unplanned movements, removal of compression forces, and the safe removal of PATIENTS from the PATIENT ENVIRONMENT when a HAZARDOUS SITUATION occurs.

Subclause 16.9.2.1 – MULTIPLE SOCKET-OUTLET

The second edition of this standard used the defined term “auxiliary mains socket-outlet (AMSO)” to describe a socket-outlet intended for provision of mains supply to other ME EQUIPMENT or to other separate parts of the ME EQUIPMENT. The systems collateral standard, IEC 60601-1-1 [13], defined a term “multiple portable socket-outlet (MPSO)”. The two terms have been combined into a new term, “MULTIPLE SOCKET-OUTLET (MSO).” Subclause 57.2 e) of the second edition required that an AMSO be designed so that it could not accept a MAINS PLUG. An exception for emergency trolleys was allowed. With the combination of the two definitions and the change to 8.11.2 to require any MSO on ME EQUIPMENT to comply with 16.9.2.1, the need for rapid exchange in an emergency situation is reconciled with the need to restrict LEAKAGE CURRENT.

Reassignment of the mains connection for the ME SYSTEM is a dangerous practice and beyond the scope of this clause. See 16.2 for disclosure requirements.

Excessive TOUCH CURRENTS can occur unless casual access for additional equipment connections is impeded or prevented.

Subclause 16.9.2.1 d)

The TOUCH CURRENT of the ME SYSTEM must be less than 500 μA in SINGLE FAULT CONDITION. A separating transformer can be used as a measure to reduce that TOUCH CURRENT. Therefore a separating transformer with BASIC INSULATION is sufficient. The DOUBLE or REINFORCED INSULATION as required for isolating transformers is not needed.

Transformers providing a greater degree of safety e.g. ones constructed to IEC 60601-1 requirements or to the isolating transformer requirements in other parts of the IEC 61558 series, e.g. IEC 61558-2-4 [63] or IEC 61558-2-23 [64], are also acceptable.

The CLASS I requirement for the transformer assembly is necessary to provide connected equipment with a PROTECTIVE EARTH CONNECTION.

Isolation monitoring of the separating transformer is not necessary. SINGLE FAULT CONDITION can be detected during routine maintenance and the occurrence of two independent SINGLE FAULT CONDITIONS is of no concern. The transformer construction can be of a type with or without a PROTECTIVELY EARTHED centre tapped secondary winding.

Subclause 16.9.2.2 – PROTECTIVE EARTH CONNECTIONS in ME SYSTEMS

All PROTECTIVE EARTH CONDUCTORS and POWER SUPPLY CORDS should be routed together.

When a MULTIPLE SOCKET-OUTLET is used to construct an ME SYSTEM, each individual item of equipment plugged in to the MULTIPLE SOCKET-OUTLET needs to meet the relevant ME EQUIPMENT or non-ME EQUIPMENT requirements. The total protective earth impedance when tested as a complete system according to 8.6.4 needs to meet the highest impedance requirement from 8.6.4. a) (i.e. shall not exceed 200 mΩ). This might require measures such as using short power supply cords within the ME SYSTEM and using a POWER SUPPLY CORD for the MULTIPLE SOCKET-OUTLET of greater cross-sectional area than is necessary for current carrying purposes to reduce its protective earth impedance. It is unacceptable practice to connect MULTIPLE SOCKET-OUTLETS in series.

In the design of some ME SYSTEMS, pathway of a fault current caused by a live part to a PROTECTIVE EARTH CONNECTION fault is protected by additional intermediate circuit breakers or fuses. Provided that such intermediate circuit breakers or fuses have a current ratings 13 A or lower, a total protective earth impedance up to 400 mΩ is acceptable.

Copyright International Electrotechnical Commission
Provided by IHS Markit under license with IEC
No reproduction or networking permitted without license from IHS Not for Resale, 08/26/2020 19:12:41 MDT

In the presence of a fault from SUPPLY MAINS to PROTECTIVELY EARTHED parts for certain allowed SUPPLY MAINS installation configurations, a touch voltage can appear on earthed conductive ACCESSIBLE PARTS for an extended time if the protective earth resistance is greater than 400 mΩ and the SUPPLY MAINS fuse is greater than 13 A.

Data in IEC 60479-1 [73] indicates that it is possible for such touch voltage (which results in a touch current) combined with an extended disconnection time present a RISK of ventricular fibrillation (see Figure 20 and Table 11 in IEC 60479-1:2018).

Within the PATIENT ENVIRONMENT it is important to limit potential differences between different parts of an ME SYSTEM, and an adequate connection with a protective earthing system plays an important role in limiting that potential difference. It is therefore important to prevent interruption of that protective means to any part of the ME SYSTEM.

– The additional protective earthing could be used when the TOUCH CURRENT in SINGLE FAULT CONDITION exceeds the allowable limits.
– The additional protective earthing is not necessary for ME EQUIPMENT complying with this standard. However, in the case of non-ME EQUIPMENT this will prevent TOUCH CURRENTS exceeding allowable limits.
– The use of a TOOL is not required to disconnect the MAINS PLUG because the MAINS PLUG will disconnect both the mains and the protective earth.

Clause 17 – Electromagnetic compatibility of ME EQUIPMENT and ME SYSTEMS

IEC 60601-1-2 specifies electromagnetic immunity test levels to minimize the effect of the electromagnetic environment on the ME EQUIPMENT and ME SYSTEMS covered by this standard. It specifies electromagnetic emissions limits to minimize the effect on other equipment of electromagnetic disturbances that could be emitted, intentionally or unintentionally, by ME EQUIPMENT and ME SYSTEMS. It also specifies requirements for identification, marking and documents so that the MANUFACTURER of the ME EQUIPMENT or ME SYSTEM provides information to the RESPONSIBLE ORGANIZATION that is essential in determining the suitability of the ME EQUIPMENT or ME SYSTEM for the electromagnetic environment of use, and in managing the electromagnetic environment of use to permit the ME EQUIPMENT or ME SYSTEM to maintain BASIC SAFETY and provide its ESSENTIAL PERFORMANCE without disturbing other equipment.

Electromagnetic emission requirements are necessary for the protection of:

– safety services (e.g. police, fire and ambulance communications);
– other ME EQUIPMENT and ME SYSTEMS;
– non-ME EQUIPMENT (e.g. computers);
– telecommunications (e.g. radio/TV, telephone, radio-navigation).

More importantly, electromagnetic immunity requirements are necessary to assure that ME EQUIPMENT and ME SYSTEMS maintain BASIC SAFETY and continue to provide their ESSENTIAL PERFORMANCE in the presence of the electromagnetic disturbances to which they can be expected to be exposed during NORMAL USE.

Annex G – Protection against HAZARDS of ignition of flammable anaesthetic mixtures (see also the rationale for 11.4)

Section six of the second edition of this standard has been moved to a normative annex. This was done in recognition of the fact that flammable anaesthetics are rarely used and their use is expected to cease entirely within a short period. However, it is also recognized that the practice of medicine changes frequently and that even now some MANUFACTURERS might still want to offer ME EQUIPMENT for such applications. In order to assure that the material contained in Section six along with the associated CATEGORY AP and CATEGORY APG RATINGS remain available while improving the readability of the standard for most users, the material has been moved to Annex G.

Copyright International Electrotechnical Commission
Provided by IHS Markit under license with IEC
No reproduction or networking permitted without license from IHS Not for Resale, 08/26/2020 19:12:41 MDT

Subclause G.1.3 – Requirements for ME EQUIPMENT

The most devastating accidents with flammable anaesthetic agents occur when the mixture of the agent with oxygen normally used is that which will cause the most rapid combustion, a state that sometimes is described as “detonation optimum.” The worst example of such an agent is cyclopropane, while the oxygen/ether mixture normally used is far below that point.

Subclause G.5.3 – Low-energy circuits

The graphs of Figure G.1, Figure G.2 and Figure G.3 are given to assist in the design of circuits that fulfil the requirements for allowable limits stated for CATEGORY AP ME EQUIPMENT without performing the ignition test.

Extrapolation for higher voltages is not valid because the ignition condition of gases changes at higher voltages. The limit for inductances is introduced because high inductance values generally produce higher voltages.

Subclause G.5.4 – External ventilation with internal overpressure

The amount of air or inert gas escaping from the ME EQUIPMENT by leakage is assumed to be limited so that hygienic conditions in the medically used room are not disturbed appreciably.

For the purposes of G.5.4 and G.5.5 the term “enclosure” can represent either the ENCLOSURE as defined in 3.26 or a distinct compartment or housing.

Subclause G.5.5 – ENCLOSURES with restricted breathing

Subclause G.5.5 a)

This requirement is regarded as sufficient to prevent ignition in NORMAL USE during an operational period of several hours since average conditions in NORMAL USE are less stringent.

Subclause G.6.2 – Power supply

This requirement prevents the introduction of voltages higher than those permitted by G.6.3. Such voltages can exist on earth wiring.

Subclause G.6.3 – Temperatures and low-energy circuits

The graphs of Figure G.4, Figure G.5 and Figure G.6 are given to assist in the design of circuits that fulfil the requirements for allowable limits stated for CATEGORY APG ME EQUIPMENT, without performing the ignition test.

Copyright International Electrotechnical Commission
Provided by IHS Markit under license with IEC
No reproduction or networking permitted without license from IHS Not for Resale, 08/26/2020 19:12:41 MDT

Annex B
(informative)

Sequence of testing

B.1 General

Tests should, if applicable, be performed in the sequence indicated below, unless otherwise stated by particular standards. See also 5.8.

However, this does not preclude the possibility of conducting a test that preliminary inspection suggests might cause failure.

The tests for radiation HAZARDS in Clause 10, biocompatibility in 11.7, USABILITY in 12.2, ALARM SYSTEMS in 12.3, PEMS in Clause 14 and electromagnetic compatibility in Clause 17 can be performed independently from the tests in the following sequence.

The tests specified for ME SYSTEMS in Clause 16 should be performed in the same sequence as the tests for ME EQUIPMENT.

B.2 RISK MANAGEMENT PROCESS for ME EQUIPMENT or ME SYSTEMS and ESSENTIAL PERFORMANCE

See 4.2 and 4.3.

B.3 General requirements

See 4.1, 4.5 to 4.10 (inclusive) and 5.1 to 5.7(inclusive).

B.4 Classification of ME EQUIPMENT and ME SYSTEMS

See Clause 6.

B.5 Determination of APPLIED PARTS and ACCESSIBLE PARTS

See 5.9.

B.6 ME EQUIPMENT identification, marking and documents

See 7.2 to 7.9 (inclusive), Annex C.

B.7 Energy consumption (power input)

See 4.11.

B.8 Limitation of voltage, current or energy

See 8.4.

B.9 Separation of parts

See 8.5.1 to 8.5.4 (inclusive).

--`,,```,,,,````-`-`,,`,,`,`,,`---

Copyright International Electrotechnical Commission
Provided by IHS Markit under license with IEC
No reproduction or networking permitted without license from IHS Not for Resale, 08/26/2020 19:12:41 MDT

B.10 CREEPAGE DISTANCES and AIR CLEARANCES

See 8.9.

B.11 HAZARDS associated with moving parts

See 9.2 except 9.2.2.4.1.

B.12 HAZARD associated with surfaces, corners and edges

See 9.3.

B.13 Serviceability

See 15.2.

B.14 Accuracy of controls and instruments and protection against hazardous outputs

See 12.1 and 12.4.

B.15 Instability HAZARDS

See 9.4.

B.16 Noise, vibration and acoustic energy

See 9.6.

B.17 Interruption of the power supply / SUPPLY MAINS to ME EQUIPMENT

See 11.8.

B.18 Protective earthing, functional earthing and potential equalization of ME EQUIPMENT

See 8.6.

B.19 Excessive temperatures in ME EQUIPMENT

See 11.1.

B.20 LEAKAGE CURRENTS and PATIENT AUXILIARY CURRENTS and dielectric strength at steady-state operating temperature

See 8.4.2 and 8.7 and 8.8.3.

B.21 Humidity preconditioning treatment

See 5.7.

Copyright International Electrotechnical Commission
Provided by IHS Markit under license with IEC
No reproduction or networking permitted without license from IHS Not for Resale, 08/26/2020 19:12:41 MDT

B.22 LEAKAGE CURRENTS and PATIENT AUXILIARY CURRENTS and dielectric strength after humidity preconditioning at ambient temperature in the laboratory

See 8.4.2 and 8.7 and 8.8.3.

B.23 Defibrillation protection

See 8.5.5.

B.24 Expelled parts HAZARD

See 9.5.

B.25 Pressure vessels and parts subject to pneumatic and hydraulic pressure

See 9.7.

B.26 HAZARDS associated with support systems

See 9.8.

B.27 Mechanical strength

See 15.3 and 9.2.2.4.1.

B.28 HAZARDOUS SITUATIONS and fault conditions

See Clause 13.

B.29 MAINS SUPPLY TRANSFORMERS of ME EQUIPMENT and transformers providing separation in accordance with 8.5

See 15.5.

B.30 ME EQUIPMENT components and general assembly

See 15.4 and 8.10.

B.31 MAINS PARTS, components and layout

See 8.11.

B.32 Insulation other than wire insulation

See 8.8.4.

--`,,```,,,,````-`-`,,`,,`,`,,`---
Copyright International Electrotechnical Commission
Provided by IHS Markit under license with IEC
No reproduction or networking permitted without license from IHS Not for Resale, 08/26/2020 19:12:41 MDT

B.33 Fire prevention and constructional requirements for fire ENCLOSURES of ME EQUIPMENT

See 11.2 and 11.3.

B.34 Overflow, spillage, leakage, ingress of water, cleaning, disinfection, sterilization and compatibility with substances used with the ME EQUIPMENT

See 11.6.

B.35 CATEGORY AP and CATEGORY APG ME EQUIPMENT

See 11.4 and Annex G.

B.36 VERIFICATION of markings

See 7.2 to 7.6 (inclusive), Annex C and 7.1.

--`,,```,,,,````-`-`,,`,,`,`,,`---

Copyright International Electrotechnical Commission
Provided by IHS Markit under license with IEC
No reproduction or networking permitted without license from IHS Not for Resale, 08/26/2020 19:12:41 MDT

Annex C
(informative)

Guide to marking and labelling requirements for ME EQUIPMENT and ME SYSTEMS

C.1 Marking on the outside of ME EQUIPMENT, ME SYSTEMS or their parts

The requirements for marking on the outside of ME EQUIPMENT and its parts are found in 7.2. Additional requirements for marking on the outside of ME EQUIPMENT, ME SYSTEMS and their parts are found in the subclauses listed in Table C.1. Symbols and SAFETY SIGNS used in marking on the outside of ME EQUIPMENT are found in Annex D.

Table C.1– Marking on the outside of ME EQUIPMENT, ME SYSTEMS or their parts [10)]

Description of marking	Subclause
CATEGORY APG ME EQUIPMENT: marking of	G.3.1
CATEGORY AP ME EQUIPMENT: marking of	G.3.2
CATEGORY AP and APG: marking of major parts	G.3.3
CATEGORY AP and APG ME EQUIPMENT: marking of parts	G.3.5
Depressurizing pressure system elements: warning about	9.7.2
Emergency stop device actuator: marking of	9.2.4
Hazardous voltage: warning of	8.11.1 i)
Mass of PATIENT, if designed for less than 135 kg: marking of	9.8.3.1
Moving parts: warning of	9.2.1
MULTIPLE SOCKET-OUTLET: marking of	16.9.2.1 b)
Overbalancing during transport: warning about	9.4.2.2
POTENTIAL EQUALIZATION CONDUCTOR terminal: marking of	8.6.7
Prohibition against pushing, leaning, resting: warning of	9.4.2.3 a)
Prohibition against sitting or stepping: warning of	9.4.2.3 b)
Reservoir or liquid storage chamber: marking of overflow HAZARD	11.6.2
MECHANICAL PROTECTIVE DEVICE intended to function only once: marking of	9.8.4.3
Separating transformer assembly: marking of	16.9.2.1 d)
Surfaces where application of force results in a RISK of overbalancing: marking of	9.4.2.3
Transport conditions: warning for	9.4.2.2

C.2 Marking on the inside of ME EQUIPMENT, ME SYSTEMS or their parts

The requirements for marking on the inside of ME EQUIPMENT and its parts are found in 7.3. Additional requirements for marking on the inside of ME EQUIPMENT, ME SYSTEMS and their parts are found in the subclauses listed in Table C.2. Symbols used in marking on the inside of ME EQUIPMENT are found in Annex D.

10) See 7.2.1 for the minimum requirements for marking on ME EQUIPMENT and on interchangeable parts.

--`,,`,,`-`-`,,`,,`,`,,`---
Copyright International Electrotechnical Commission
Provided by IHS Markit under license with IEC
No reproduction or networking permitted without license from IHS Not for Resale, 08/26/2020 19:12:41 MDT

Table C.2 – Marking on the inside of ME EQUIPMENT, ME SYSTEMS or their parts

Description of marking	Subclause
Hazardous energies: marking of capacitors or the connected circuit parts	8.4.4
Hazardous voltage: marking of parts	8.11.1 i)
MAINS TERMINAL DEVICES: marking of terminals other than terminal blocks	8.11.4.1
Marking of pressure vessels and pipes: national certification mark	9.7.5
Separating transformer assembly: marking of	16.9.2.1 d)

C.3 Marking of controls and instruments

The requirements for marking of controls and instruments are found in 7.4. Additional requirements for marking of controls and instruments are found in the subclauses listed in Table C.3.

Table C.3 – Marking of controls and instruments

Description of marking	Subclause
Controls: scale marking of	15.4.6.1 b)
Varying the temperature setting of THERMOSTATS: clear indication of	15.4.2.2

C.4 ACCOMPANYING DOCUMENTS, general

The requirements for general information to be included in the ACCOMPANYING DOCUMENTS are found in 7.9.1. Additional requirements for general information to be included in the ACCOMPANYING DOCUMENTS are found in the subclauses listed in Table C.4.

Table C.4 – ACCOMPANYING DOCUMENTS, general

Description of requirement	Clause
CATEGORY AP and CATEGORY APG ME EQUIPMENT and parts	G.3.4
CLASS II ME EQUIPMENT with isolated internal screens: explanation of	8.6.9
Defibrillation voltage, any necessary recovery time	8.5.5.1 b)
Fixing of structures to floor, wall, ceiling, etc.	9.8.1
Instability excluding transport: placement and loading of doors, drawers and shelves	9.4.2.2 e)
IT-NETWORK: instructions for connecting ME EQUIPMENT	14.13
Isolation device: requirements for	8.11.4.4
Lifting points: indication of	9.4.4 a)
Mass of PATIENT, if support systems designed for less than 135 kg	9.8.3.1
Mass of PATIENT, if support systems designed for more than 135 kg	9.8.3.1
MECHANICAL PROTECTIVE DEVICE intended to function only once: instruction to call SERVICE PERSONNEL	9.8.4.3
ME EQUIPMENT: placement of SAFE WORKING LOAD	9.4.2.4.3
ME SYSTEMS: addition requirements	16.2
Noise: protective means	9.6.2.1 b)
Passing over an obstruction: instructions for	9.4.2.4.3
Working conditions	5.4 a)

--`,,```,,,,````-`-`,,`,,`,`,,`---

Copyright International Electrotechnical Commission
Provided by IHS Markit under license with IEC
No reproduction or networking permitted without license from IHS Not for Resale, 08/26/2020 19:12:41 MDT

C.5 ACCOMPANYING DOCUMENTS, Instructions for use

The requirements for information to be included in the instructions for use are found in 7.9.2. Additional requirements for information to be included in the instructions for use are found in the subclauses listed in Table C.5.

Table C.5 – ACCOMPANYING DOCUMENTS, instructions for use

Description of requirement	Subclause
ACCESSIBLE PARTS: instruction not to touch them and the PATIENT simultaneously	8.4.2 c)
ACCESSIBLE PARTS: instructions to the OPERATOR to open ACCCESS COVERS	8.4.2 c)
APPLIED PARTS (hot or cold): temperatures and clinical effects of	11.1.2.1
APPLIED PARTS not intended to deliver heat: temperature exceeding 41 °C	11.1.2.2
Cleaning or disinfection PROCESSES: specification of	11.6.6
Effect of multiple cleanings/disinfections	11.6.6
Foot-operated controls: intended for use in areas where liquids are likely to be found	15.4.7.3 b)
Mass of ACCESSORIES	9.8.3.1
ME SYSTEMS: other equipment intended to provide power to ME EQUIPMENT	16.3
MOBILE ME EQUIPMENT: requirement that more than one person is needed to move	9.4.2.4.2
Moving parts: warning of	9.2.1
POTENTIAL EQUALIZATION CONDUCTOR terminal: information on the function and use of	8.6.7
Reservoir or liquid storage chamber: information on overflow HAZARD	11.6.2
Transport conditions: warning for	9.4.2.2

C.6 ACCOMPANYING DOCUMENTS, technical description

The requirements for information to be included in the technical description are found in 7.9.3. Additional requirements for information to be included in the technical description are found in the subclauses listed in Table C.6.

Table C.6 – ACCOMPANYING DOCUMENTS, technical description

Description of requirement	Clause
External means of isolation: description of	8.11.1 b)
ME SYSTEM large transient currents: disclosure of	16.3
Non-automatic discharging device for internal capacitors: specification of	8.4.4

Copyright International Electrotechnical Commission
Provided by IHS Markit under license with IEC
No reproduction or networking permitted without license from IHS Not for Resale, 08/26/2020 19:12:41 MDT

Annex D
(informative)

Symbols on marking
(see Clause 7)

Symbols are frequently used on ME EQUIPMENT in preference to words with the intention of obviating language differences and permitting easier comprehension of a marking or indication, sometimes in a restricted space. New and improved symbols and SAFETY SIGNS have been introduced since the publication of the second edition of IEC 60601-1 which necessitates changes in the list of approved symbols and SAFETY SIGNS for use on ME EQUIPMENT.

Chief among these changes is the revision of the usage of symbol 24 in Table D.1. This symbol was formally used to indicate a warning as well as an informative marking (e.g. this is where the HIGH VOLTAGE is connected). A new SAFETY SIGN (3) in Table D.2 has been added to indicate, “Warning: Dangerous Voltage.” In this edition of the standard, the SAFETY SIGNS of Table D.2 are required where a warning is intended while the symbols in Table D.1 are used when the intention is solely to inform.

Similarly is the revision of the usage of symbol 10 in Table D.1, which was formerly used to indicate “attention: consult ACCOMPANYING DOCUMENTS”. That symbol is now used to indicate caution. A new symbol (11) in Table D.1 has been added to indicate, “follow operating instructions”. Additionally, a new SAFETY SIGN (10) in Table D.2 has been added to mark ME EQUIPMENT where failure to follow operating instructions could place the PATIENT or OPERATOR at RISK.

Consistent use of these symbols and SAFETY SIGNS in all fields of use (e.g., medical, consumer products, and general transportation) will help ME EQUIPMENT OPERATORS to become familiar with their meaning. Conversely, any inconsistent use will lead to confusion and mistakes and jeopardize safety.

IEC 60878 [60] provides a useful compendium of graphical symbols and SAFETY SIGN used on electrical equipment in medical practice that were complied from relevant ISO and IEC standards. See also 7.5 and 7.6.

For symbol requirements not met by the symbols in IEC 60878, refer in the first instance to published IEC or ISO symbols, noting that, where necessary, two or more symbols can be grouped together to convey a particular meaning and that, provided the essential communicative characteristics of the basic symbol are maintained, some latitude in graphic design is permissible. The colours of symbols are not specified, except for the background of the AP and APG symbols (see Clause G.3). The colours of SAFETY SIGNS are specified in ISO 3864-1.

In the following tables, the symbol graphic and title are provided for information.

--`,,```,,,,````-`-`,,`,,`,`,,`---

Copyright International Electrotechnical Commission
Provided by IHS Markit under license with IEC
No reproduction or networking permitted without license from IHS Not for Resale, 08/26/2020 19:12:41 MDT

Table D.1 – General symbols

No.	Symbol	Reference	Title
1	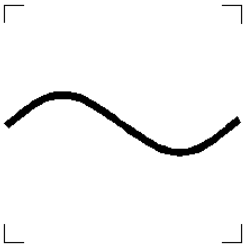	IEC 60417-5032	Alternating current
2		IEC 60417-5032-1	Three-phase alternating current
3		IEC 60417-5032-2	Three-phase alternating current with neutral conductor
4	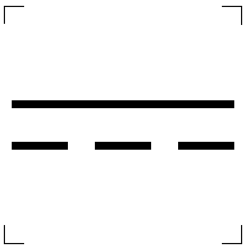	IEC 60417-5031	Direct current
5	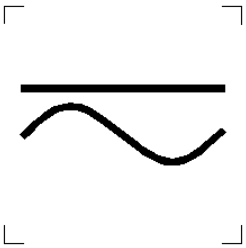	IEC 60417-5033	Both direct and alternating current
6	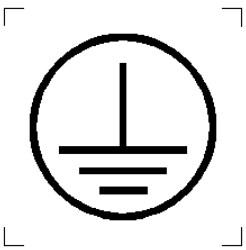	IEC 60417-5019	Protective earth (ground)

Copyright International Electrotechnical Commission
Provided by IHS Markit under license with IEC
No reproduction or networking permitted without license from IHS
Not for Resale, 08/26/2020 19:12:41 MDT

Table D.1 *(continued)*

No.	Symbol	Reference	Title
7	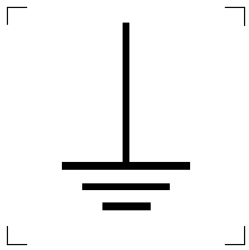	IEC 60417-5017	Earth (ground)
8	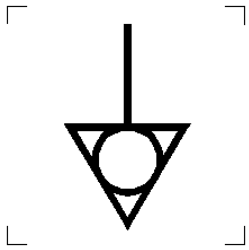	IEC 60417-5021	Equipotentiality
9	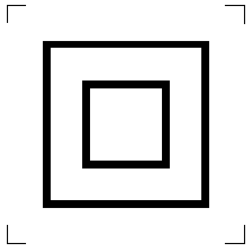	IEC 60417-5172	CLASS II equipment
10		ISO 7000-0434A	Caution In case of application as a SAFETY SIGN, the rules according to ISO 3864-1 are to be adhered to. See SAFETY SIGN ISO 7010-W001 (Table D.2, SAFETY SIGN 2).
11	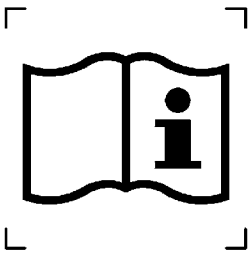	ISO 7000-1641	Operating instructions
12	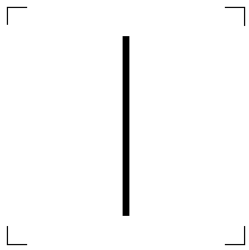	IEC 60417-5007	“ON” (power)

--`,``````,,`,``,,,,,,,,,```-`-`,,`,,`,`,,`---

Copyright International Electrotechnical Commission
Provided by IHS Markit under license with IEC
No reproduction or networking permitted without license from IHS
Not for Resale, 08/26/2020 19:12:41 MDT

Table D.1 *(continued)*

No.	Symbol	Reference	Title
13	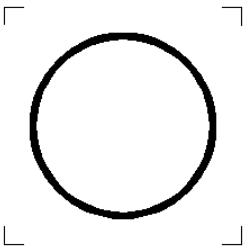	IEC 60417-5008	“OFF” (power)
14	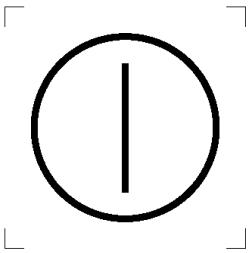	IEC 60417-5010	“ON” / “OFF” (push-push) NOTE Each position, "ON" or "OFF", is a stable position.
15	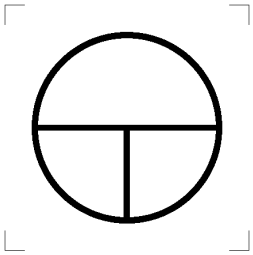	IEC 60417-5011	“ON” / “OFF” (push button) NOTE "OFF" is a stable position, whilst the "ON" position only remains during the time the button is depressed.
16	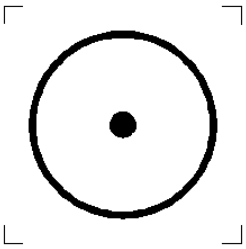	IEC 60417-5264	“ON” for part of equipment
17	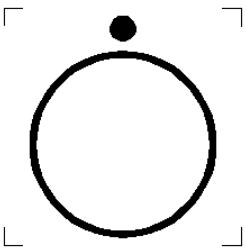	IEC 60417-5265	“OFF” for part of the equipment
18	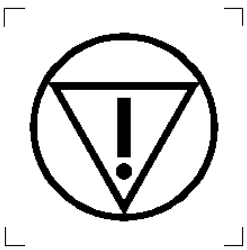	IEC 60417-5638	Emergency stop

Copyright International Electrotechnical Commission
Provided by IHS Markit under license with IEC
No reproduction or networking permitted without license from IHS Not for Resale, 08/26/2020 19:12:41 MDT

Table D.1 *(continued)*

No.	Symbol	Reference	Title
19	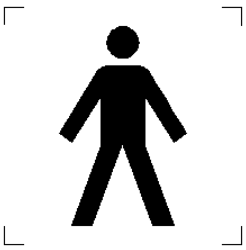	IEC 60417-5840	TYPE B APPLIED PART NOTE Subclause 7.2.10 requires that, for clear differentiation with symbol 20, symbol 19 is not to be applied in such a way as to give the impression of being inscribed within a square.
20	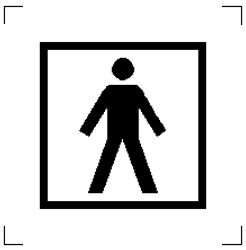	IEC 60417-5333	TYPE BF APPLIED PART
21	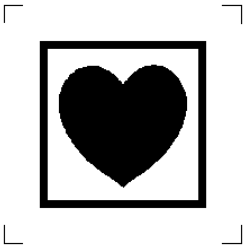	IEC 60417-5335	TYPE CF APPLIED PART
22		IEC 60417-5331	CATEGORY AP equipment
23	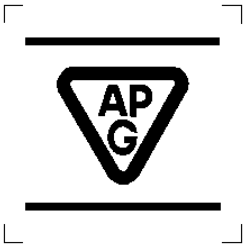	IEC 60417-5332	CATEGORY APG equipment
24	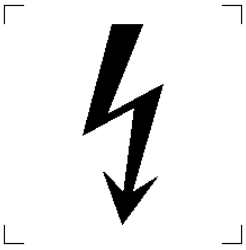	IEC 60417-5036	Dangerous voltage

Copyright International Electrotechnical Commission
Provided by IHS Markit under license with IEC
No reproduction or networking permitted without license from IHS Not for Resale, 08/26/2020 19:12:41 MDT

Table D.1 *(continued)*

No.	Symbol	Reference	Title
25	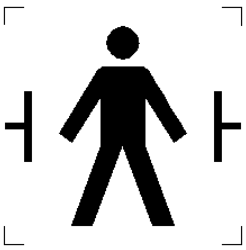	IEC 60417-5841	DEFIBRILLATION-PROOF TYPE B APPLIED PART
26	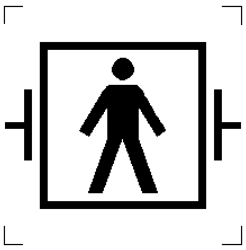	IEC 60417-5334	DEFIBRILLATION-PROOF TYPE BF APPLIED PART
27	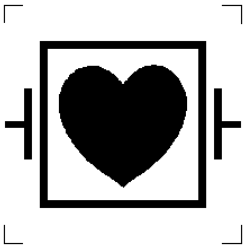	IEC 60417-5336	DEFIBRILLATION-PROOF TYPE CF APPLIED PART
28	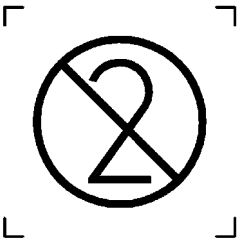	ISO 7000-1051	Do not reuse
29	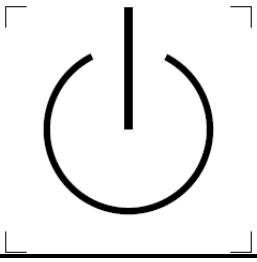	IEC 60417-5009	Stand-by

Copyright International Electrotechnical Commission
Provided by IHS Markit under license with IEC
No reproduction or networking permitted without license from IHS
Not for Resale, 08/26/2020 19:12:41 MDT

Table D.2 – SAFETY SIGNS

No.	SAFETY SIGN	Reference	Title
1		ISO 3864-1, Figure 3	Template for constructing a warning sign NOTE Background colour: yellow Triangular band: Black Symbol or text: Black
2		ISO 7010-W001	General warning sign
3	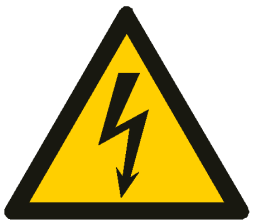	ISO 7010-W012	Warning, electricity
4		ISO 7010-P001 and ISO 3864-1, Figure 1	General prohibition sign and Template for constructing a prohibition sign NOTE Background colour: white Circular band and slash: red Symbol or text: black
5		ISO 7010-P017	No pushing
6		ISO 7010-P018	No sitting

Copyright International Electrotechnical Commission
Provided by IHS Markit under license with IEC
No reproduction or networking permitted without license from IHS
Not for Resale, 08/26/2020 19:12:41 MDT

Table D.2 *(continued)*

No.	Safety sign	Reference	Title
7		ISO 7010-P019	No stepping on surface
8	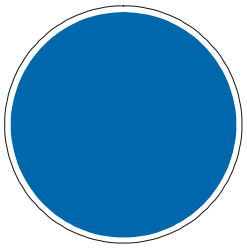	ISO 3864-1 Figure 2	Template for constructing a mandatory action sign NOTE Background colour: blue Symbol or text: white
9		ISO 7010-M001	General mandatory action sign
10		ISO 7010-M002	Refer to instruction manual/ booklet NOTE On ME EQUIPMENT "Follow instructions for use"

Copyright International Electrotechnical Commission
Provided by IHS Markit under license with IEC
No reproduction or networking permitted without license from IHS
Not for Resale, 08/26/2020 19:12:41 MDT

Table D.3 – General codes

1	**N**	IEC 60445	Connection point for the neutral conductor on PERMANENTLY INSTALLED equipment
2	**IPN_1N_2**	IEC 60529	N_1 = 0 Non-protected 1 Protected against solid foreign objects of 50 mm ∅ and greater 2 Protected against solid foreign objects of 12,5 mm ∅ and greater 3 Protected against solid foreign objects of 2,5 mm ∅ and greater 4 Protected against solid foreign objects of 1,0 mm ∅ and greater 5 Dust-protected 6 Dust-tight N_2 = 0 Non-protected 1 Protection against vertically falling water drops 2 Protection against vertically falling water drops when ENCLOSURE tilted up to 15° 3 Protected against spraying water 4 Protected against splashing water 5 Protected against water jets 6 Protected against powerful water jets 7 Protected against the effects of temporary immersion in water 8 Protected against the effects of continuous immersion in water NOTE When a characteristic numeral is not required to be specified, it is replaced by the letter “X” (“XX” if both numerals are omitted).

--`,```,,,,,,,,,,```-`-`,,`,,`,`,,`---
Copyright International Electrotechnical Commission
Provided by IHS Markit under license with IEC
No reproduction or networking permitted without license from IHS
Not for Resale, 08/26/2020 19:12:41 MDT

Annex E
(informative)

Examples of the connection of the measuring device (MD) for measurement of the PATIENT LEAKAGE CURRENT and PATIENT AUXILIARY CURRENT
(see 8.7)

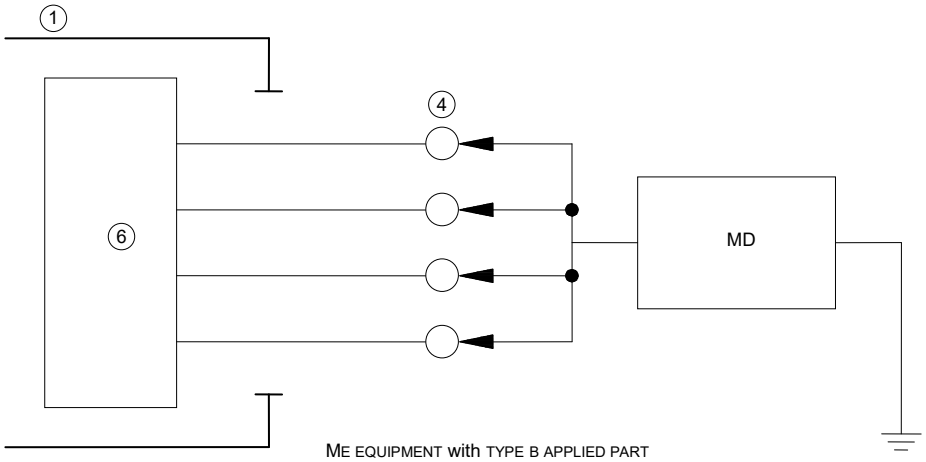

Figure E.1 – TYPE B APPLIED PART

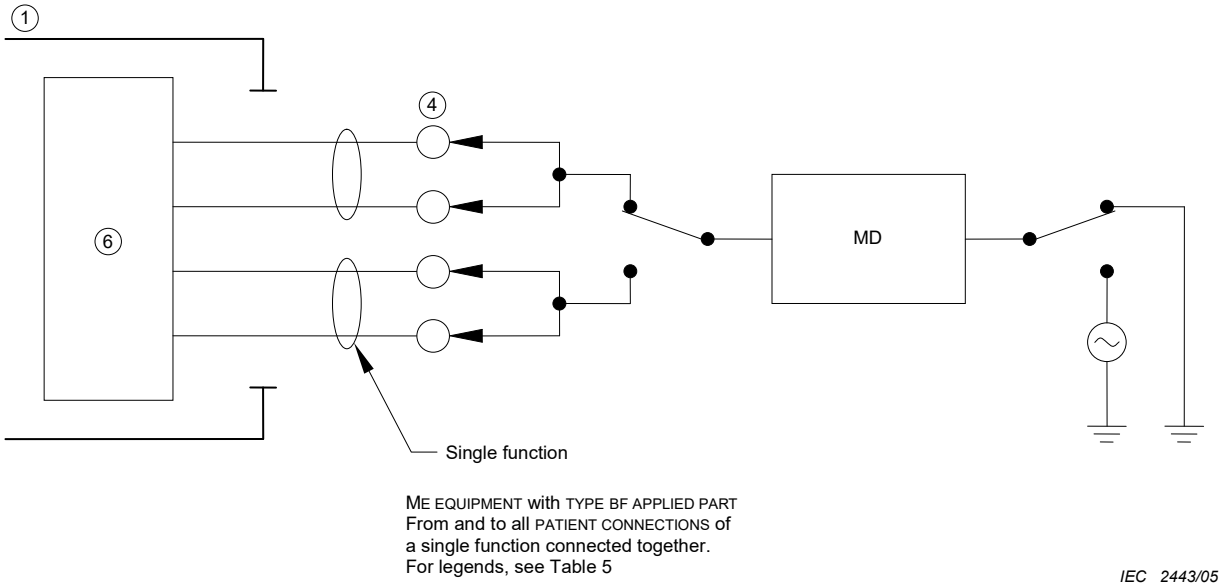

Figure E.2 – TYPE BF APPLIED PART

Copyright International Electrotechnical Commission
Provided by IHS Markit under license with IEC
No reproduction or networking permitted without license from IHS
Not for Resale, 08/26/2020 19:12:41 MDT

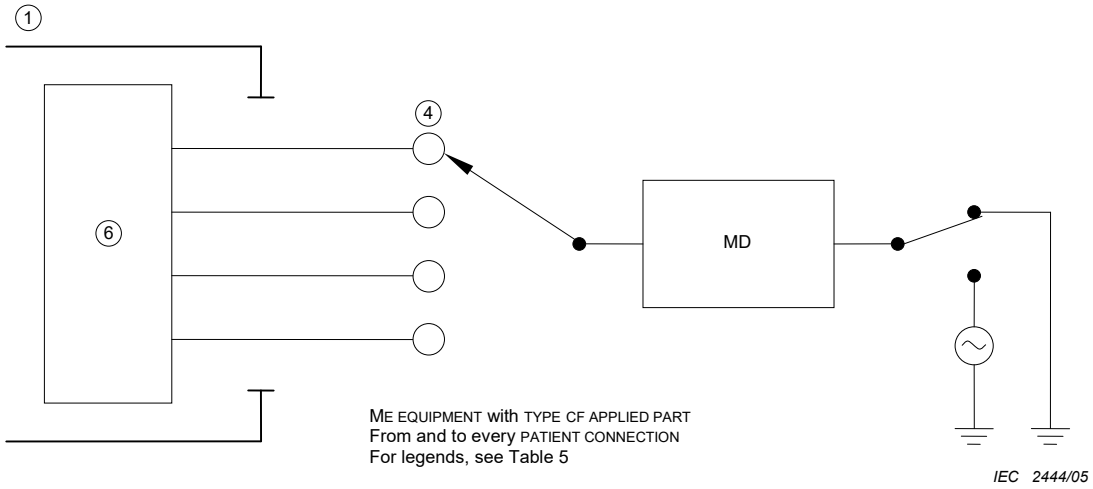

Figure E.3 – TYPE CF APPLIED PART

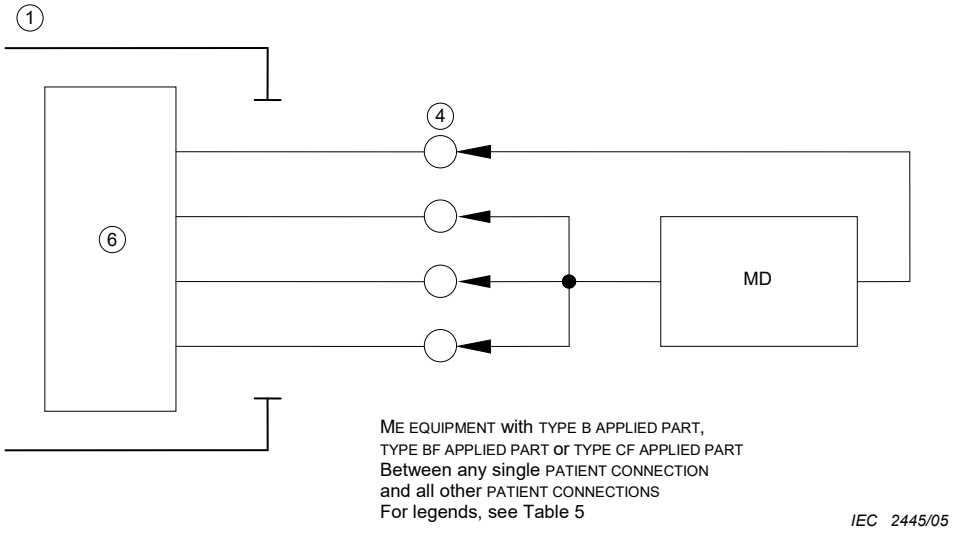

Figure E.4 – PATIENT AUXILIARY CURRENT

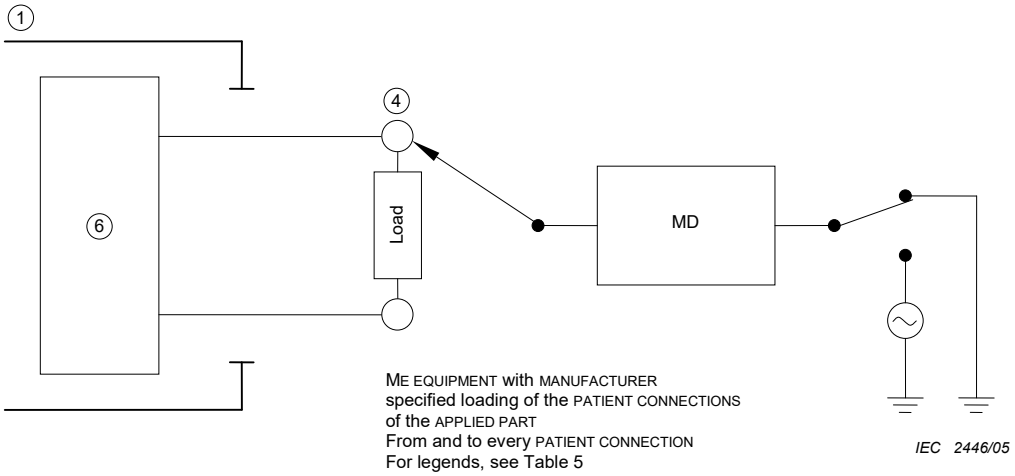

Figure E.5 – Loading of the PATIENT CONNECTIONS if specified by the MANUFACTURER

Copyright International Electrotechnical Commission
Provided by IHS Markit under license with IEC
No reproduction or networking permitted without license from IHS
Not for Resale, 08/26/2020 19:12:41 MDT

Annex F
(informative)

Suitable measuring supply circuits

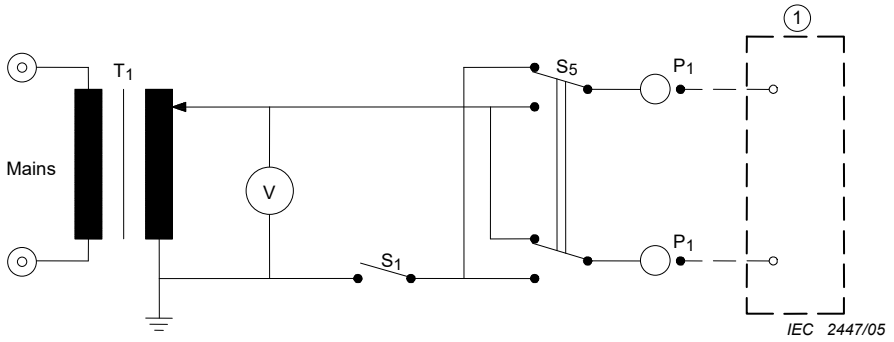

For legends, see Table 5.

Figure F.1 – Measuring supply circuit with one side of the SUPPLY MAINS at approximately earth potential
(see 8.7.4.2)

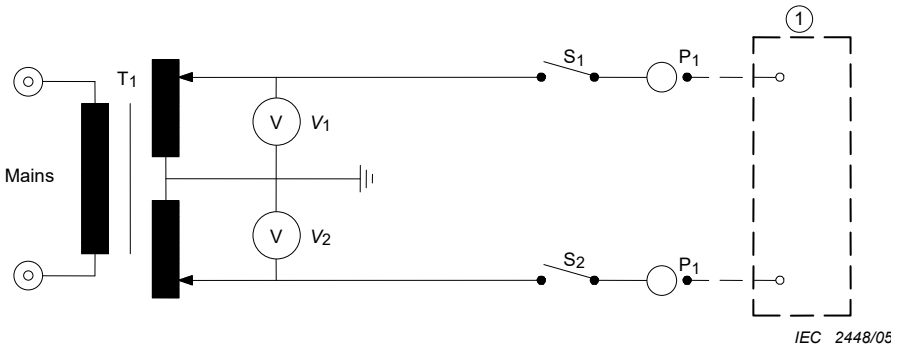

For legends, see Table 5.

Figure F.2 – Measuring supply circuit with SUPPLY MAINS approximately symmetrical to earth potential
(see 8.7.4.2)

Copyright International Electrotechnical Commission
Provided by IHS Markit under license with IEC
No reproduction or networking permitted without license from IHS
Not for Resale, 08/26/2020 19:12:41 MDT

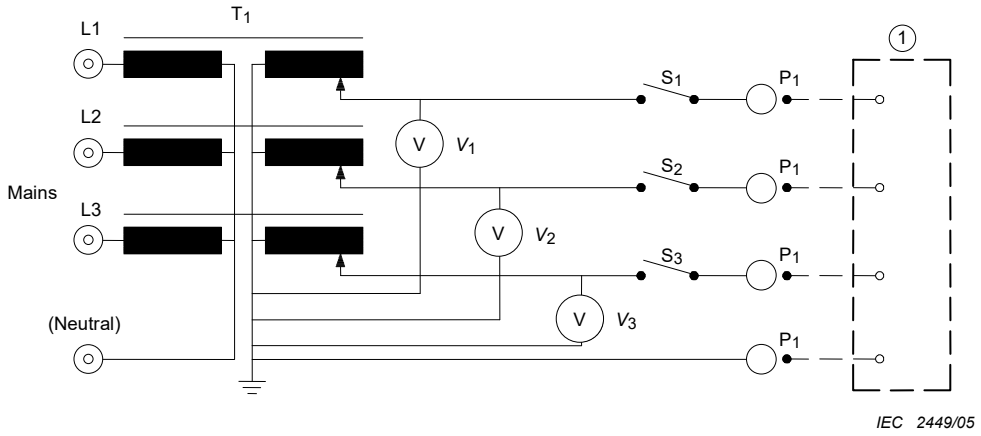

For legends, see Table 5.

Figure F.3 – Measuring supply circuit for polyphase ME EQUIPMENT specified for connection to a polyphase SUPPLY MAINS
(see 8.7.4.2)

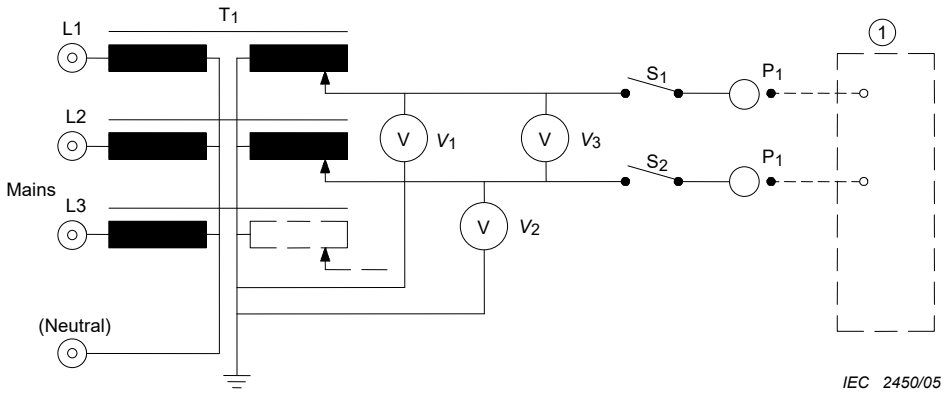

For legends, see Table 5.

Figure F.4 – Measuring supply circuit for single-phase ME EQUIPMENT specified for connection to a polyphase SUPPLY MAINS
(see 8.7.4.2)

Copyright International Electrotechnical Commission
Provided by IHS Markit under license with IEC
No reproduction or networking permitted without license from IHS
Not for Resale, 08/26/2020 19:12:41 MDT

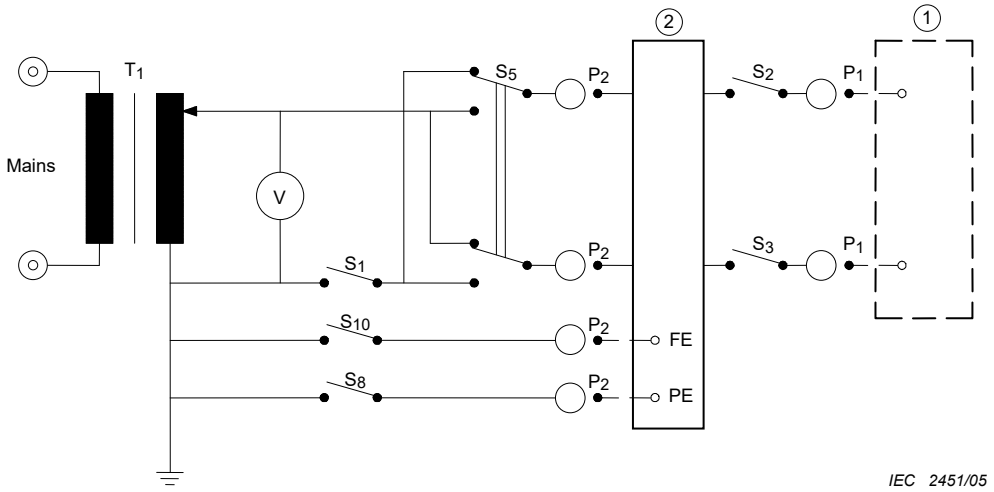

For legends, see Table 5.

Figure F.5 – Measuring supply circuit for ME EQUIPMENT having a separate power supply unit or intended to receive its power from another equipment in an ME SYSTEM
(see 8.7.4.2)

Copyright International Electrotechnical Commission
Provided by IHS Markit under license with IEC
No reproduction or networking permitted without license from IHS
Not for Resale, 08/26/2020 19:12:41 MDT

Annex G
(normative)

Protection against HAZARDS of ignition of flammable anaesthetic mixtures

NOTE This annex replaces the former Section Six: "Protection against HAZARDS of ignition of flammable anaesthetic mixtures" of the second edition.

G.1 Introduction

G.1.1 Applicability

Where ME EQUIPMENT is used in areas in which flammable anaesthetics or flammable agents for disinfection or skin cleaning are applied, an explosion RISK can exist if such anaesthetics or agents are mixed with air, or with oxygen or nitrous oxide.

Ignition of such a mixture can be caused by sparks or by contact with parts having a high surface temperature.

Sparks can be caused where electrical circuits are opened or closed by operation of switches, connectors, fuses or OVER-CURRENT RELEASES and the like.

In HIGH VOLTAGE parts, sparks can be caused by corona. Static discharges can cause sparks.

The probability of occurrence of the ignition of such anaesthetic mixtures depends on their concentration, the appropriate minimum ignition energy, the presence of high surface temperatures and the energy of sparking.

G.1.2 Industrial equipment and components

The constructional requirements of IEC 60079-0 are generally not appropriate for ME EQUIPMENT for several reasons:

a) they lead to constructions of a size, weight or design that are not applicable for medical reasons or that cannot be sterilizable;

b) some constructions allow an explosion inside an ENCLOSURE, but prevent propagation outside it. Such a construction, which might be inherently safe, would be unacceptable in an operating theatre where continuity of operation of ME EQUIPMENT is essential;

c) industrial requirements were made for flammable agents mixed with air. They cannot be applied to mixtures with oxygen or nitrous oxide used in medical practice;

d) in medical practice flammable anaesthetic mixtures occur only in relatively small quantities.

However some of the constructions described in IEC 60079-0 are acceptable for CATEGORY AP ME EQUIPMENT (see G.5.1).

G.1.3 * Requirements for ME EQUIPMENT

In this annex, the location of flammable anaesthetic mixtures is described:

– as much as necessary for the construction of ME EQUIPMENT, as minimum for specified conditions of exhaust and absorption;

– as much as necessary for the allocation of ME EQUIPMENT and the construction of the electrical installation in the IEC 60364 series.

Copyright International Electrotechnical Commission
Provided by IHS Markit under license with IEC
No reproduction or networking permitted without license from IHS Not for Resale, 08/26/2020 19:12:41 MDT

The recommendations, limits and tests of this annex are based on the results of statistical considerations obtained from experiments with the most readily flammable mixtures of ether vapour with air and with oxygen, using the test apparatus described in Clause G.7. This is justified because combinations with ether have the lowest ignition temperatures and the lowest ignition energies of commonly used agents.

Where temperatures or circuit parameters of ME EQUIPMENT used in a FLAMMABLE ANAESTHETIC MIXTURE WITH AIR exceed allowable limits and sparking cannot be avoided the relevant parts and circuits can be enclosed in ENCLOSURES with pressurized inert gas or clean air or in ENCLOSURES with restricted breathing.

ENCLOSURES with restricted breathing delay the build-up of an ignitable concentration. They are recognized because it is assumed that a period in which ME EQUIPMENT is used in a FLAMMABLE ANAESTHETIC MIXTURE WITH AIR is followed by a period of ventilation during which such a concentration will disappear.

For ME EQUIPMENT containing or used in a FLAMMABLE ANAESTHETIC MIXTURE WITH OXYGEN OR NITROUS OXIDE, requirements, limits and tests are far more stringent.

These recommendations apply not only to NORMAL CONDITION but, additionally, in the SINGLE FAULT CONDITION, as indicated in 4.7. Only two exemptions from an actual ignition test are recognized, these being either the absence of sparks and limited temperature or limited temperature and restricted circuit parameters.

G.2 Locations and basic requirements

G.2.1 Parts of CATEGORY APG ME EQUIPMENT

Parts of CATEGORY APG ME EQUIPMENT in which a FLAMMABLE ANAESTHETIC MIXTURE WITH AIR occurs shall be CATEGORY AP or APG ME EQUIPMENT and shall comply with the requirements of Clause G.3, G.4 and G.5.

G.2.2 FLAMMABLE ANAESTHETIC MIXTURE WITH AIR

Where a FLAMMABLE ANAESTHETIC MIXTURE WITH AIR occurs because of a leakage or discharge of a FLAMMABLE ANAESTHETIC MIXTURE WITH OXYGEN OR NITROUS OXIDE from an ENCLOSURE, it is considered to propagate to a volume surrounding the leakage or discharge point at a distance from 5 cm to 25 cm from such a point.

G.2.3 FLAMMABLE ANAESTHETIC MIXTURE WITH OXYGEN OR NITROUS OXIDE

A FLAMMABLE ANAESTHETIC MIXTURE WITH OXYGEN OR NITROUS OXIDE may be contained in a completely or partly enclosed ME EQUIPMENT part and in the PATIENT'S respiratory tract. Such a mixture is considered to propagate to a distance of 5 cm from an ENCLOSURE part where leakage or discharge occurs.

G.2.4 ME EQUIPMENT specified for use with FLAMMABLE ANAESTHETIC MIXTURE WITH AIR

ME EQUIPMENT or parts thereof specified for use with FLAMMABLE ANAESTHETIC MIXTURE WITH AIR (in a location defined in G.2.2) shall be CATEGORY AP or APG ME EQUIPMENT and shall comply with the requirements of Clause G.4 and G.5.

Copyright International Electrotechnical Commission
Provided by IHS Markit under license with IEC
No reproduction or networking permitted without license from IHS Not for Resale, 08/26/2020 19:12:41 MDT

G.2.5 ME EQUIPMENT specified for use with FLAMMABLE ANAESTHETIC MIXTURE WITH OXYGEN OR NITROUS OXIDE

ME EQUIPMENT or parts thereof specified for use with FLAMMABLE ANAESTHETIC MIXTURE WITH OXYGEN OR NITROUS OXIDE (in a location defined in G.2.2) shall be CATEGORY APG ME EQUIPMENT and shall comply with the requirements of G.4 and G.6.

Compliance with the requirements of G.2.4 and G.2.5 is checked by inspection and by the appropriate tests of Clause G.3, G.4, G.5 and G.6.

These tests shall be performed after applicable tests according to 11.6.6 and 11.6.7.

G.3 Marking, ACCOMPANYING DOCUMENTS

G.3.1 CATEGORY APG marking

CATEGORY APG ME EQUIPMENT shall be marked on a prominent location with a green-coloured band at least 2 cm wide imprinted with the characters “APG” (see symbol IEC 60417-5332 (2002-10) (Table D.1, symbol 23)). The length of the green-coloured band should be at least 4 cm. The size of the marking should be as large as possible for the particular case. If this marking is impossible, the relevant information shall be given in the instructions for use.

Compliance is checked by inspection and by application of the tests and criteria in 7.1.2 and 7.1.3.

G.3.2 CATEGORY AP marking

CATEGORY AP ME EQUIPMENT shall be marked on a prominent location with a green-coloured circle of at least 2 cm diameter, imprinted with the characters “AP” (see symbol IEC 60417-5331 (2002-10) (Table D.1, symbol 22)).

The size of the marking should be as large as possible for the particular case. If this marking is impossible, the relevant information shall be given in the instructions for use.

Compliance is checked by inspection and by application of the tests and criteria in 7.1.2 and 7.1.3.

G.3.3 Placement of markings

The marking according to G.3.1 and G.3.2 shall be present on the major part of the ME EQUIPMENT if this part is CATEGORY AP or CATEGORY APG. It need not be repeated on detachable parts that can only be used together with the marked ME EQUIPMENT.

Compliance is checked by inspection.

G.3.4 ACCOMPANYING DOCUMENTS

ACCOMPANYING DOCUMENTS shall contain an indication to enable the RESPONSIBLE ORGANIZATION to distinguish the parts of ME EQUIPMENT (see G.3.5) that are CATEGORY AP and CATEGORY APG.

Compliance is checked by inspection.

G.3.5 Marking when parts of ME EQUIPMENT are CATEGORY AP or CATEGORY APG

On ME EQUIPMENT in which only certain ME EQUIPMENT parts are CATEGORY AP or CATEGORY APG, the marking shall clearly indicate which parts are CATEGORY AP or CATEGORY APG.

Compliance is checked by inspection.

--`,,```,,,,````-`-`,,`,,`,`,,`---

Copyright International Electrotechnical Commission
Provided by IHS Markit under license with IEC
No reproduction or networking permitted without license from IHS Not for Resale, 08/26/2020 19:12:41 MDT

G.4 Common requirements for CATEGORY AP and CATEGORY APG ME EQUIPMENT

G.4.1 Electrical connections

a) CREEPAGE DISTANCES and AIR CLEARANCES between the connection points of POWER SUPPLY CORD shall be according to THE Table 12 values for one MEANS OF PATIENT PROTECTION.

b) Connections, except those in the circuits described in G.5.3 and G.6.3, shall be protected against accidental disconnection in NORMAL USE or shall be so designed that connection or disconnection can be performed only with the use of a TOOL.

c) CATEGORY AP and CATEGORY APG ME EQUIPMENT shall not be provided with a DETACHABLE POWER SUPPLY CORD unless the circuit complies with the requirements of G.5.3 and G.6.3.

Compliance is checked by inspection or measurement.

G.4.2 Construction details

a) Opening of an ENCLOSURE providing protection against the penetration of gases or vapours into the ME EQUIPMENT or into parts thereof shall be possible only with the aid of a TOOL.

Compliance is checked by inspection.

b) To minimize arcing and sparking due to foreign objects penetrating the ENCLOSURE:

- top covers of ENCLOSURES shall have no openings; openings for controls are permitted if these openings are covered by the control knob;
- openings in side-covers shall have such dimensions that penetration by a solid cylindrical object of more than 4 mm diameter is prevented;
- openings in base plates shall have such dimensions that penetration by a solid cylindrical object of more than 12 mm diameter is prevented.

Compliance is checked by means of a cylindrical test rod of 4 mm diameter for side-covers and 12 mm diameter for base plates. The test rod is not to enter the ENCLOSURE when applied in all possible directions without appreciable force.

c) Where insulation of electrical conductors equal to one MEANS OF PATIENT PROTECTION may contact a part containing a FLAMMABLE ANAESTHETIC MIXTURE WITH OXYGEN OR NITROUS OXIDE or ignitable gases alone or oxygen, a short circuit of these conductors or a short circuit of one conductor to a conductive part containing the gas or mixture shall not result in loss of integrity of such a part or result in an inadmissible temperature in such a part (see G.6.3 a)) or in any HAZARDOUS SITUATION.

Compliance is checked by inspection. In case of doubt, a short-circuit test (without explosive gases) should be performed and the temperature in the relevant part should be measured if possible. The short-circuit test need not be performed if the product of the open-circuit voltage in volts and the short-circuit current in amperes does not exceed 10.

G.4.3 Prevention of electrostatic charges

a) Electrostatic charges shall be prevented on CATEGORY AP and CATEGORY APG ME EQUIPMENT by a combination of appropriate measures such as:

- the use of antistatic materials with a limited electrical resistance as specified in G.4.3 b), and

Copyright International Electrotechnical Commission
Provided by IHS Markit under license with IEC
No reproduction or networking permitted without license from IHS Not for Resale, 08/26/2020 19:12:41 MDT

– provision of electrically conductive paths from ME EQUIPMENT or its parts to a conductive floor or to the protective earth system or the potential equalization system or via wheels to an antistatic floor of the medically used room.

b) The electrical resistance limits of anaesthetic tubing, mattresses and pads, castor tyres and other antistatic material shall comply with ISO 2882.

Compliance with the allowable resistance limits given in ISO 2882 is checked by measurements according to ISO 1853, ISO 2878 and ISO 23529.

G.4.4 Corona

Parts and components of ME EQUIPMENT operating at more than 2 000 V a.c. or more than 2 400 V d.c. that are not included in ENCLOSURES in compliance with G.5.4 or G.5.5 shall be so designed that corona cannot be produced.

Compliance is checked by inspection and measurement.

G.5 Requirements and tests for CATEGORY AP ME EQUIPMENT, parts and components thereof

G.5.1 General

ME EQUIPMENT, its parts or components shall not ignite FLAMMABLE ANAESTHETIC MIXTURES WITH AIR in NORMAL USE and NORMAL CONDITION.

ME EQUIPMENT, its parts or components complying with one of Subclauses G.5.2 to G.5.5 (inclusive) are considered to comply with the requirement of this subclause.

ME EQUIPMENT, its parts or components complying with the requirements of IEC 60079-0 for pressurized ENCLOSURES (IEC 60079-2), for sand-filled ENCLOSURES (IEC 60079-5) or for oil-immersed equipment (IEC 60079-6) as well as with the requirements of this standard (excluding those of G.5.2 to G.5.5), are considered to comply with the requirements for CATEGORY AP ME EQUIPMENT.

G.5.2 Temperature limits

ME EQUIPMENT, its parts or components not producing sparks and not producing operating temperatures of surfaces, in contact with gas mixtures in NORMAL USE and NORMAL CONDITION, exceeding 150 °C in case of restricted vertical air circulation by convection, or exceeding 200 °C in case of unrestricted vertical air circulation, if measured at an ambient temperature of 25 °C, are considered to comply with the requirements of G.5.1.

The operating temperatures are measured during the tests mentioned in 11.1.

G.5.3 * Low-energy circuits

ME EQUIPMENT, its parts or components that may produce sparks in NORMAL USE and NORMAL CONDITION of the ME EQUIPMENT (for example, switches, relays, plug connections that can be detached without the use of a TOOL, including connections inside ME EQUIPMENT that are not sufficiently locked or secured, and brush motors) shall comply with the temperature requirements of G.5.2 and additionally the voltage U_{max} and the current I_{max}, which can occur in their circuits, taking into account the capacitance C_{max} and the inductance L_{max} shall comply with the following:

$U_{max} \leq U_{zR}$ with a given current I_{zR}, see Figure G.1,

$U_{max} \leq U_c$ with a given capacitance C_{max}, see Figure G.2,

$I_{max} \leq I_{zR}$ with a given voltage U_{zR}, see Figure G.1, and

Copyright International Electrotechnical Commission
Provided by IHS Markit under license with IEC
No reproduction or networking permitted without license from IHS Not for Resale, 08/26/2020 19:12:41 MDT

$I_{max} \leq I_{zL}$ with a given inductance L_{max} and a $U_{max} \leq 24$ V, see Figure G.3.

– The graphs of Figure G.1, Figure G.2 and Figure G.3 have been obtained with the test apparatus according to Figure G.7 with the most readily flammable mixtures of ether vapour with air (ether volume percentage 4,3 ± 0,2 %) for an ignition probability (without safety factor) of 10^{-3}.

– Extrapolation of the graph of Figure G.1 is allowed for combinations of currents and corresponding voltages within the limitations $I_{zR} \cdot U_{zR} \leq 50$ W.

Extrapolation for voltages of more than 42 V is not valid.

– Extrapolation of the graph of Figure G.2 is allowed for combinations of capacitances and corresponding voltages within the limitations:

$$\frac{C}{2}U^2 \leq 1{,}2 \text{ mJ}$$

Extrapolation for voltages of more than 242 V is not valid.

If the equivalent resistance R is less than 8 000 Ω, U_{max} is additionally determined with the actual resistance R.

– Extrapolation of the graph of Figure G.3 is allowed for combinations of currents and corresponding inductances within the limitations

$$\frac{L}{2}I^2 \leq 0{,}3 \text{ mJ}$$

Extrapolation for inductances larger than 900 mH is not valid.

– Voltage U_{max} is taken as the highest supply voltage occurring in the circuit under investigation with the sparking contact open, taking into account the MAINS VOLTAGE variations required in 4.10.

– Current I_{max} is taken as the highest current flowing in the circuit under investigation with the sparking contact closed, taking into account the MAINS VOLTAGE variations required in 4.10.

– Capacitance C_{max} and inductance L_{max}, are taken as the values that occur at the component under investigation that produces sparks in the ME EQUIPMENT.

– If the circuit is supplied with a.c., the peak value is taken into account.

– If the circuit is complicated and consists of more than one capacitance, inductance and resistance, or a combination thereof, an equivalent circuit is calculated to determine the equivalent maximum capacitance, the equivalent maximum inductance and additionally the equivalent U_{max} and I_{max}, either as d.c. values or as a.c. peak values.

Compliance is checked either by temperature measurement and determination of U_{max}, I_{max}, R, L_{max} and C_{max} and application of Figure G.1, Figure G.2 and Figure G.3, or by examination of the design data.

Copyright International Electrotechnical Commission
Provided by IHS Markit under license with IEC
No reproduction or networking permitted without license from IHS Not for Resale, 08/26/2020 19:12:41 MDT

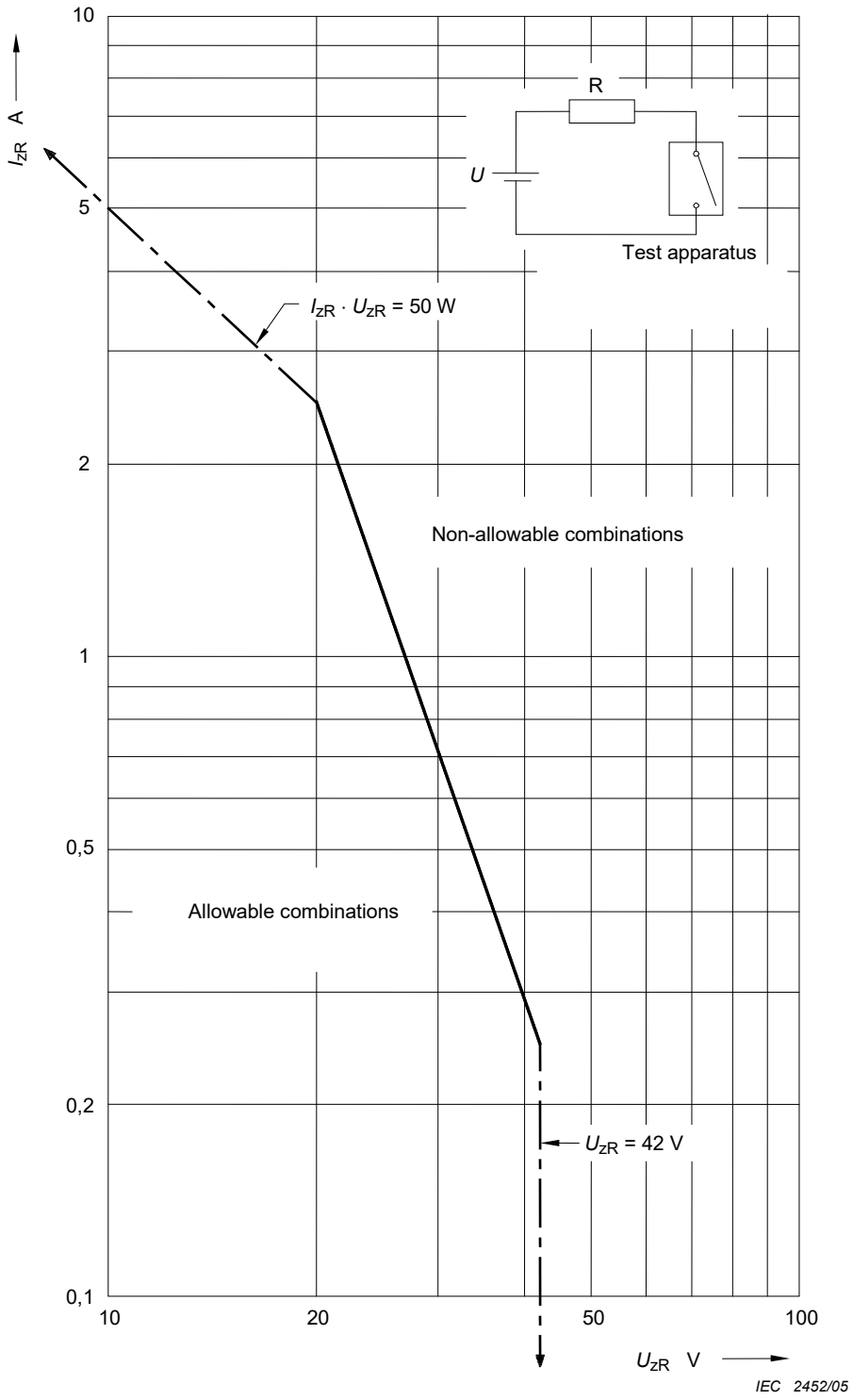

Figure G.1– Maximum allowable current I_{zR} as a function of the maximum allowable voltage U_{zR} measured in a purely resistive circuit with the most flammable mixture of ether vapour with air

Copyright International Electrotechnical Commission
Provided by IHS Markit under license with IEC
No reproduction or networking permitted without license from IHS
Not for Resale, 08/26/2020 19:12:41 MDT

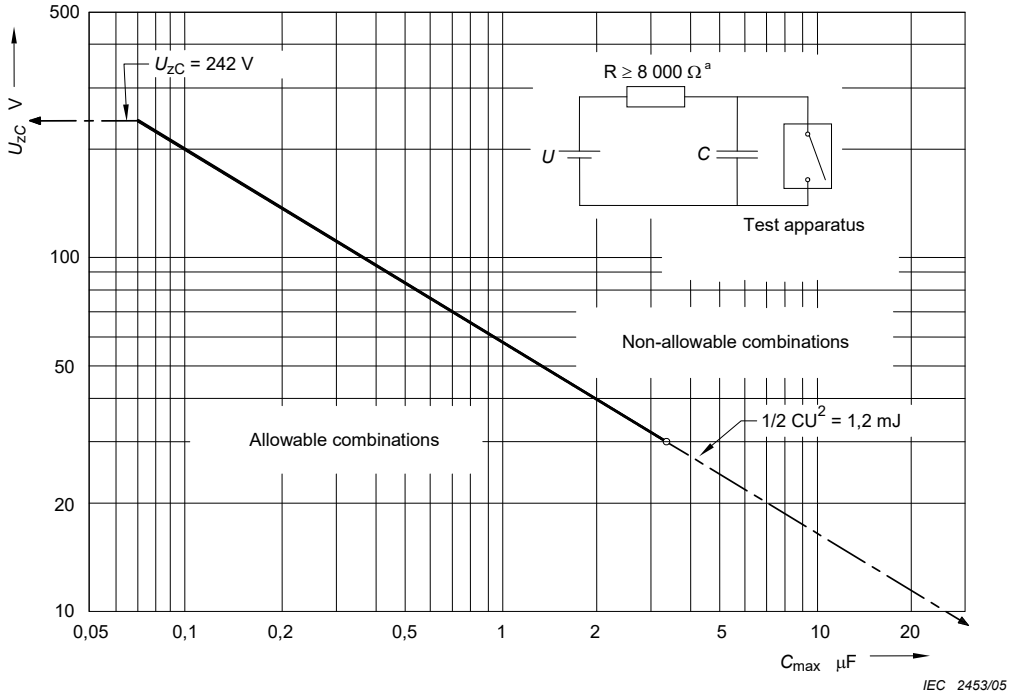

[a] 8 000 Ω or the actual resistance, if *R* is less than 8 000 Ω

Figure G.2 – Maximum allowable voltage U_{zC} as a function of the capacitance C_{max} measured in a capacitive circuit with the most flammable mixture of ether vapour with air

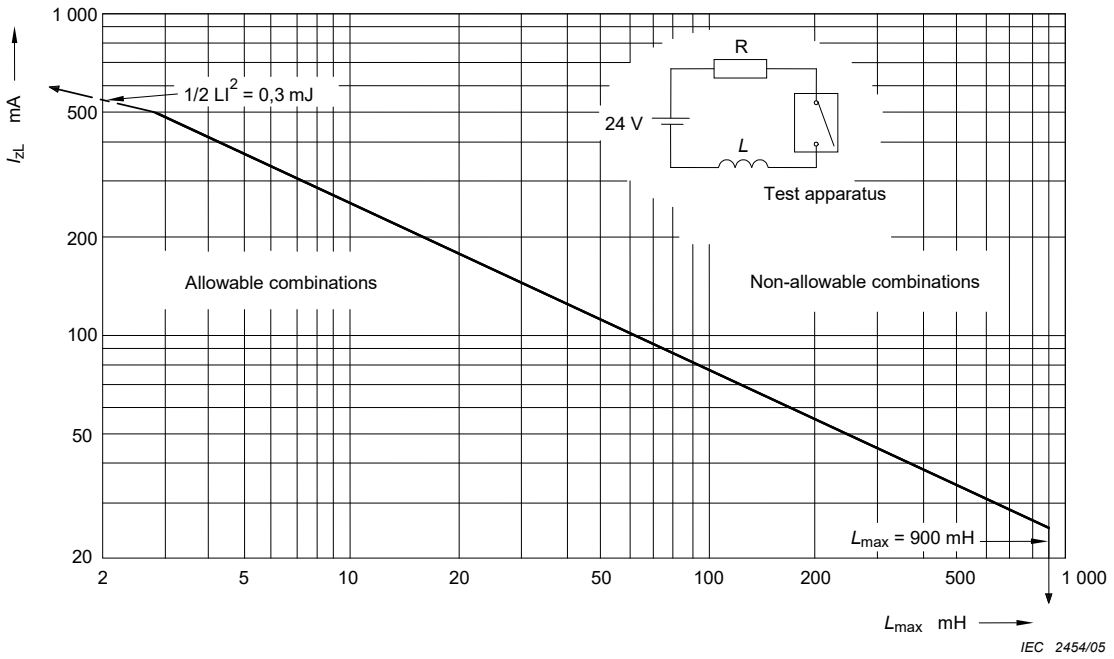

Figure G.3 – Maximum allowable current I_{zL} as a function of the inductance L_{max} measured in an inductive circuit with the most flammable mixture of ether vapour with air

Copyright International Electrotechnical Commission
Provided by IHS Markit under license with IEC
No reproduction or networking permitted without license from IHS
Not for Resale, 08/26/2020 19:12:41 MDT

G.5.4 * External ventilation with internal overpressure

Where ME EQUIPMENT, its parts or components are enclosed in an ENCLOSURE with external ventilation by means of internal overpressure the following requirements shall apply.

a) FLAMMABLE ANAESTHETIC MIXTURES WITH AIR that might have penetrated into the ENCLOSURE of ME EQUIPMENT or of an ME EQUIPMENT part shall be removed by ventilation before the ME EQUIPMENT or the ME EQUIPMENT part can be energized, and subsequently the penetration of such mixtures during operation shall be prevented by maintenance of overpressure within the ME EQUIPMENT or the ME EQUIPMENT part by means of air not containing flammable gases or vapours or by means of a physiologically acceptable inert gas (for example nitrogen).

b) The overpressure inside the ENCLOSURE shall be at least 75 Pa in NORMAL CONDITION. The overpressure shall be maintained at the site of potential ignition even if the air or inert gas can escape through openings in the ENCLOSURE that are necessary for the normal operation of ME EQUIPMENT or its parts.

   Energizing ME EQUIPMENT shall only be possible after the required minimum overpressure has been present for a time sufficient to ventilate the relevant ENCLOSURE so that the displaced volume of air or of inert gas is at least five times the volume of the ENCLOSURE. (However, ME EQUIPMENT may be energized at any time or repeatedly if the overpressure is continuously present.)

c) If the overpressure drops below 50 Pa during operation, ignition sources shall be de-energized automatically by means that either shall be located in a place where the requirements and tests of Clause G.4 do not apply, or comply with the requirements of Clause G.5.

d) The external surface of the ENCLOSURE in which the internal overpressure is maintained shall not attain in NORMAL CONDITION and NORMAL USE an operating temperature exceeding 150 °C, measured in an ambient temperature of 25 °C.

   Compliance with the requirements of G.5.4 a) to G.5.4 d) is checked by temperature, pressure and flow measurements and inspection of the pressure monitoring device.

G.5.5 ENCLOSURES with restricted breathing

Where ME EQUIPMENT, its parts or components are enclosed in an ENCLOSURE with restricted breathing the following requirements shall apply:

a) * ENCLOSURES with restricted breathing shall be so designed that the formation of a FLAMMABLE ANAESTHETIC MIXTURE WITH AIR inside the ENCLOSURE does not occur whilst the ENCLOSURE is surrounded by a FLAMMABLE ANAESTHETIC MIXTURE WITH AIR of a high concentration for a period of at least 30 min but without any pressure difference to the space inside the ENCLOSURE.

b) If the required tightness is obtained by gaskets or sealing, the material used shall therefore be resistant to ageing.

   Compliance is checked by application of test B-b of IEC 60068-2-2, Clause 15, temperature 70 °C ± 2 °C, duration 96 h.

c) If the ENCLOSURE contains inlets for flexible cords, their gas-tightness shall be maintained when the cords are stressed by bending or pulling. The cords shall be fitted with adequate anchorages to limit these stresses (see 8.11.3.5).

--`,```,,,,,,,,,,```-`-`,,`,,`,`,,`---
Copyright International Electrotechnical Commission
Provided by IHS Markit under license with IEC
No reproduction or networking permitted without license from IHS
Not for Resale, 08/26/2020 19:12:41 MDT

Compliance with the requirements of G.5.5 a), G.5.5 b) and G.5.5 c) is checked by application of the following tests:

After completion of the test of G.5.4 b) if relevant, an internal overpressure of 400 Pa is created and 30 pulls of the value shown in Table G.1 are applied to each flexible cord alternately, in the axial direction of the cord inlet and in the least favourable perpendicular direction, each pull without jerks and of 1 s duration. At the end of the test the overpressure is not be reduced to less than 200 Pa.

Table G.1 – Gas-tightness of cord inlets

Mass (*m*) of ME EQUIPMENT kg	**Pull** N
$m \leq 1$	30
$1 < m \leq 4$	60
$m > 4$	100

When the ENCLOSURE of ME EQUIPMENT parts or components is sealed or gas-tight and no doubt exists that the ENCLOSURE complies with the aforementioned requirement, the ENCLOSURE is tested by inspection only.

The operating temperature of the external surface of the ENCLOSURE shall not exceed 150 °C measured at an ambient temperature of 25 °C. The steady state operating temperature of the ENCLOSURE is also measured.

G.6 Requirements and tests for CATEGORY APG ME EQUIPMENT, parts and components thereof

G.6.1 General

ME EQUIPMENT, its parts or components shall not ignite FLAMMABLE ANAESTHETIC MIXTURE WITH OXYGEN OR NITROUS OXIDE. This requirement applies both in NORMAL USE and in the event of any applicable SINGLE FAULT CONDITION, as described in 4.7.

ME EQUIPMENT, its parts or components that do not comply with the requirements of G.6.3 are tested by a CONTINUOUS OPERATION test over a period of 10 min in an ether/oxygen mixture (ether volume percentage 12,2 % ± 0,4 %) after the thermal steady state condition has been attained, but not longer than 3 h after switching on.

G.6.2 * Power supply

Parts or components of CATEGORY APG ME EQUIPMENT that operate in a FLAMMABLE ANAESTHETIC MIXTURE WITH OXYGEN OR NITROUS OXIDE shall be supplied from a source that is isolated from earth by at least insulation equal to one MEANS OF PATIENT PROTECTION and from electrical parts by insulation equal to two MEANS OF PATIENT PROTECTION.

Compliance is checked by inspection of circuit diagrams and measurement.

G.6.3 * Temperatures and low-energy circuits

ME EQUIPMENT, and its parts or components are considered to comply with the requirements of G.6.1 without being tested according to G.6.1 if, in NORMAL USE, NORMAL CONDITION and SINGLE FAULT CONDITIONS (see 4.7):

a) no sparks are produced and no temperatures exceeding 90 °C occur, or

Copyright International Electrotechnical Commission
Provided by IHS Markit under license with IEC
No reproduction or networking permitted without license from IHS Not for Resale, 08/26/2020 19:12:41 MDT

b) a temperature limit of 90 °C is not exceeded, ME EQUIPMENT or its parts contain components that may produce sparks in NORMAL USE, NORMAL CONDITION and applicable SINGLE FAULT CONDITIONS, but the voltage U_{max} and the current I_{max} that can occur in their circuits, taking into account the capacitance C_{max} and the inductance Lmax, comply with the following:

$U_{max} \leq U_{zR}$ with a given I_{zR}, see Figure G.4, and

$U_{max} \leq U_{zC}$ with given C_{max}, see Figure G.5, as well as

$I_{max} \leq I_{zR}$ with a given voltage U_{zR}, see Figure G.4, and

$I_{max} \leq I_{zL}$ with a given inductance L_{max} and $U_{max} \leq 24$ V, see Figure G.6.

– The graphs in Figure G.4, Figure G.5 and Figure G.6 have been obtained with the test apparatus according to Figure G.7 with the most readily flammable mixture of ether vapour with oxygen (ether volume percentage 4,3 ± 0,2 %) for an ignition probability of 10^{-3}. The maximum allowable values of I_{zR} (Figure G.4), U_{zC} (Figure G.5) and I_{zL} (Figure G.6) include a safety factor of 1,5.

– Extrapolation of the curves of Figure G.4, Figure G.5 and Figure G.6 is limited to the areas indicated.

– Voltage U_{max} is taken as the highest no-load voltage occurring in the circuit under investigation, taking into account MAINS VOLTAGE variations as required in 4.10.

– Current I_{max} is taken as the highest current flowing in the circuit under investigation, taking into account MAINS VOLTAGE variations as required in 4.10.

– Capacitance C_{max} and inductance L_{max} are taken as values that occur in the relevant circuit.

– If the equivalent resistance R in Figure G.5 is less than 8 000 Ω, U_{max} is additionally determined with the actual resistance R.

– If the circuit is supplied with a.c., the peak value is taken into account.

– If the circuit is complicated and consists of more than one capacitance, inductance and resistance or a combination thereof an equivalent circuit is calculated to determine the equivalent maximum capacitance, the equivalent maximum inductance and, additionally, the equivalent U_{max} and I_{max} either as d.c. values or a.c. peak values.

– If the energy produced in an inductance or capacitance in a circuit is limited by voltage-limiting or current-limiting devices preventing the limits of Figure G.4, Figure G.5 and Figure G.6 being exceeded, two independent components shall be applied, so that the required limitation of voltage or current is obtained even in the case of a first fault (short circuit or open circuit) in one of these components.

This requirement does not apply to transformers designed and made according to this standard and to wire-wound current-limiting resistors provided with a protection against unwinding of the wire in the event of rupture.

Compliance is checked by inspection, temperature measurements, comparison with design data or by measurement of U_{max}, I_{max}, R, L_{max} and C_{max} and using Figure G.4, Figure G.5 and Figure G.6.

Copyright International Electrotechnical Commission
Provided by IHS Markit under license with IEC
No reproduction or networking permitted without license from IHS Not for Resale, 08/26/2020 19:12:41 MDT

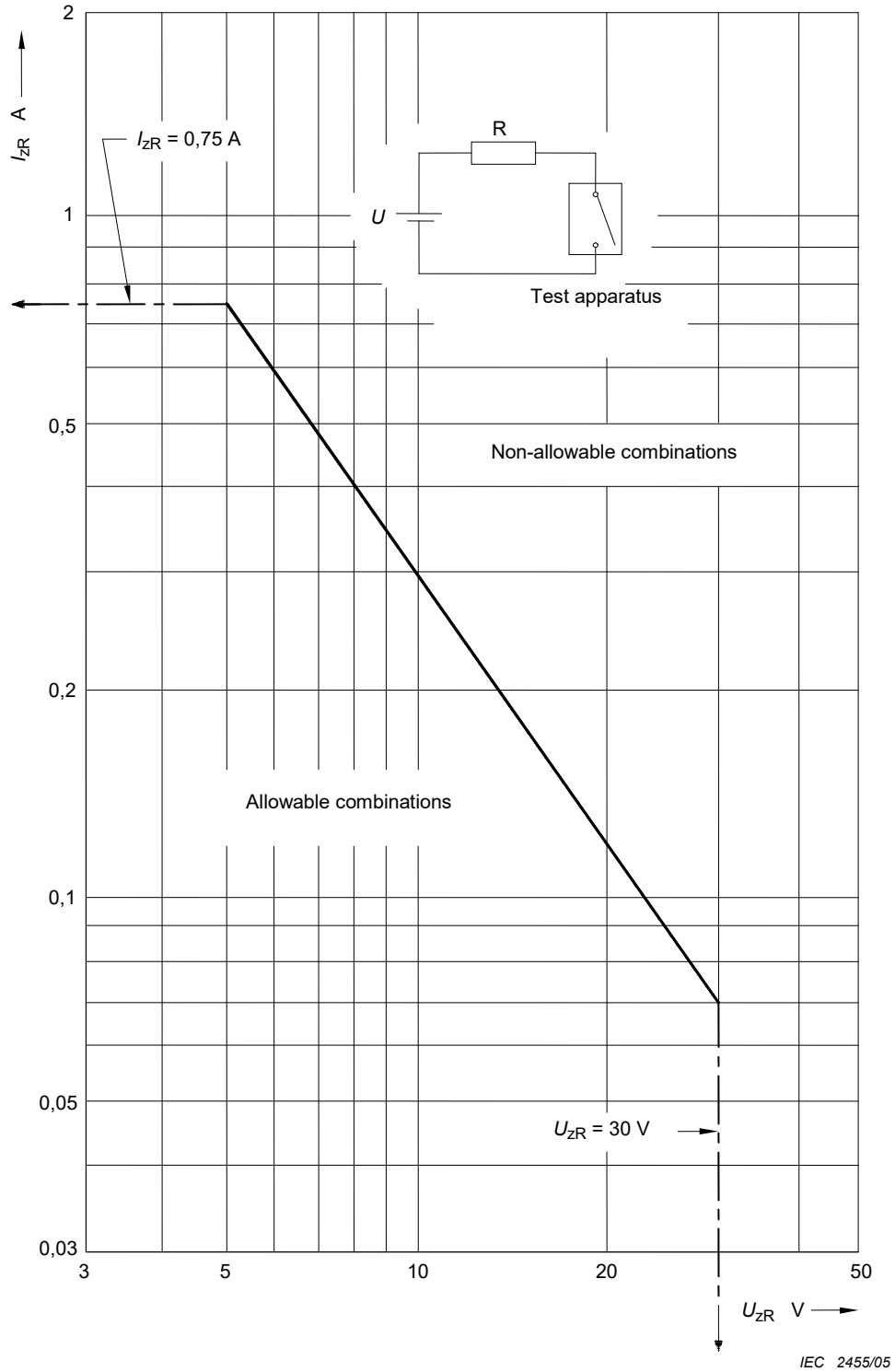

Figure G.4 – Maximum allowable current I_{zR} as a function of the maximum allowable voltage U_{zR} measured in a purely resistive circuit with the most flammable mixture of ether vapour with oxygen

Copyright International Electrotechnical Commission
Provided by IHS Markit under license with IEC
No reproduction or networking permitted without license from IHS
Not for Resale, 08/26/2020 19:12:41 MDT

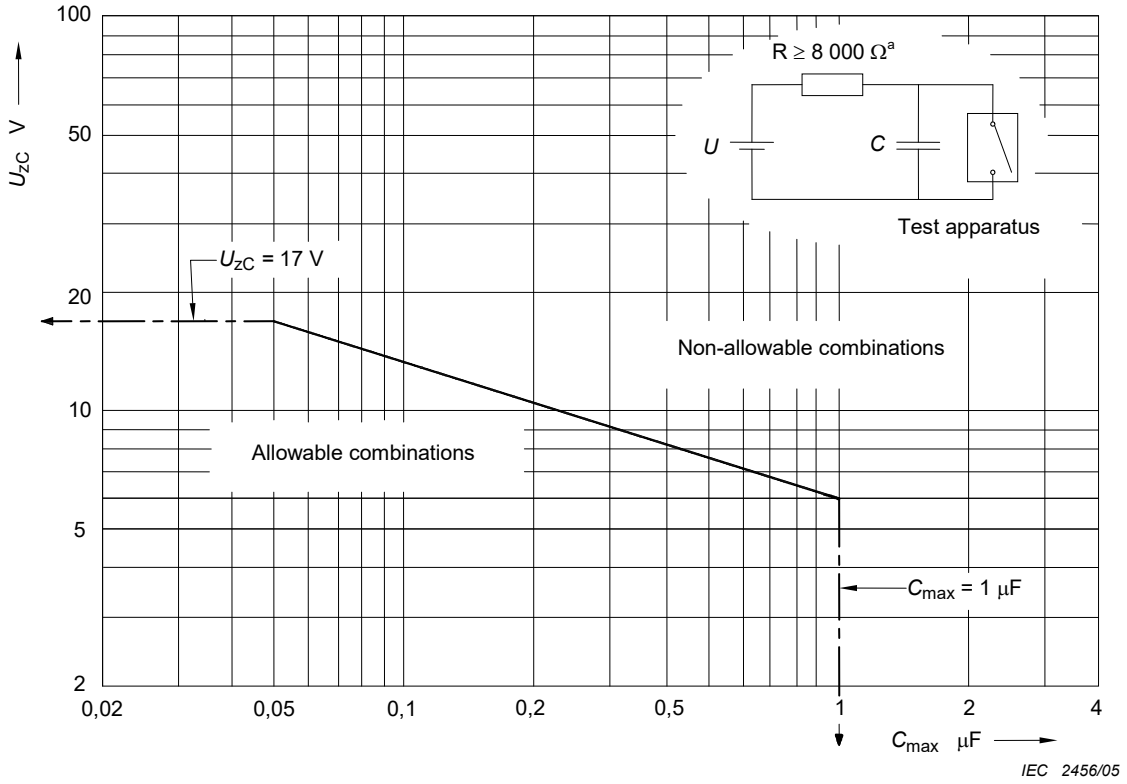

[a] 8 000 Ω or the actual resistance, if *R* is less than 8 000 Ω

Figure G.5 – Maximum allowable voltage U_{ZC} as a function of the capacitance C_{max} measured in a capacitive circuit with the most flammable mixture of ether vapour with oxygen

Copyright International Electrotechnical Commission
Provided by IHS Markit under license with IEC
No reproduction or networking permitted without license from IHS
Not for Resale, 08/26/2020 19:12:41 MDT

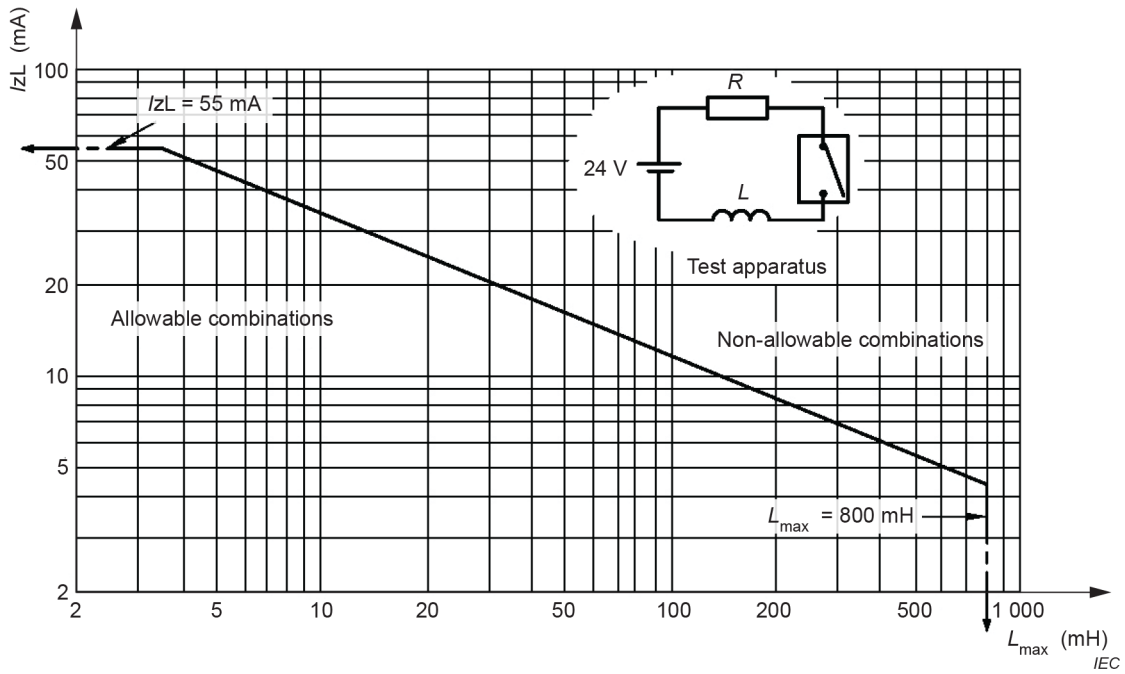

Figure G.6 – Maximum allowable current I_{zL} as a function of the inductance L_{max} measured in an inductive circuit with the most flammable mixture of ether vapour with oxygen

G.6.4 Heating elements

ME EQUIPMENT, its parts and components that heat a FLAMMABLE ANAESTHETIC MIXTURE WITH OXYGEN OR NITROUS OXIDE shall be provided with a non-SELF-RESETTING THERMAL CUT-OUT, as an additional protection against overheating.

Compliance is checked by the corresponding test of 15.4.2.1.

The current-carrying part of the heating element shall not be in direct contact with the FLAMMABLE ANAESTHETIC MIXTURE WITH OXYGEN OR NITROUS OXIDE.

Compliance is checked by inspection.

G.7 Test apparatus for flammable mixtures

NOTE Formally Appendix F of the second edition.

The test apparatus comprises an ignition space with a volume of at least 250 cm³, which contains the prescribed atmosphere or mixture and a contact arrangement (see Figure G.7) providing sparks by opening and closing.

The contact arrangement consists of a cadmium disk with two groves and a second disk with four tungsten wires having a diameter of 0,2 mm that slides over the first disk. The free length of the tungsten wires is 11 mm. The shaft to which the tungsten wires are connected rotates with a speed of 80 r/min. The shaft connected to the cadmium disk turns in opposite direction to the shaft connected to the disk with wires.

The ratio of the rotation speed of the shaft connected to the wires and the other shaft is 50:12.

Both shafts are isolated from each other and from the frame.

The ignition space must be able to support an internal overpressure of 1,5 MPa.

Copyright International Electrotechnical Commission
Provided by IHS Markit under license with IEC
No reproduction or networking permitted without license from IHS Not for Resale, 08/26/2020 19:12:41 MDT

With the contact arrangement, the circuit to be tested is closed or opened and it is checked if the sparks will ignite the atmosphere or mixture under test.

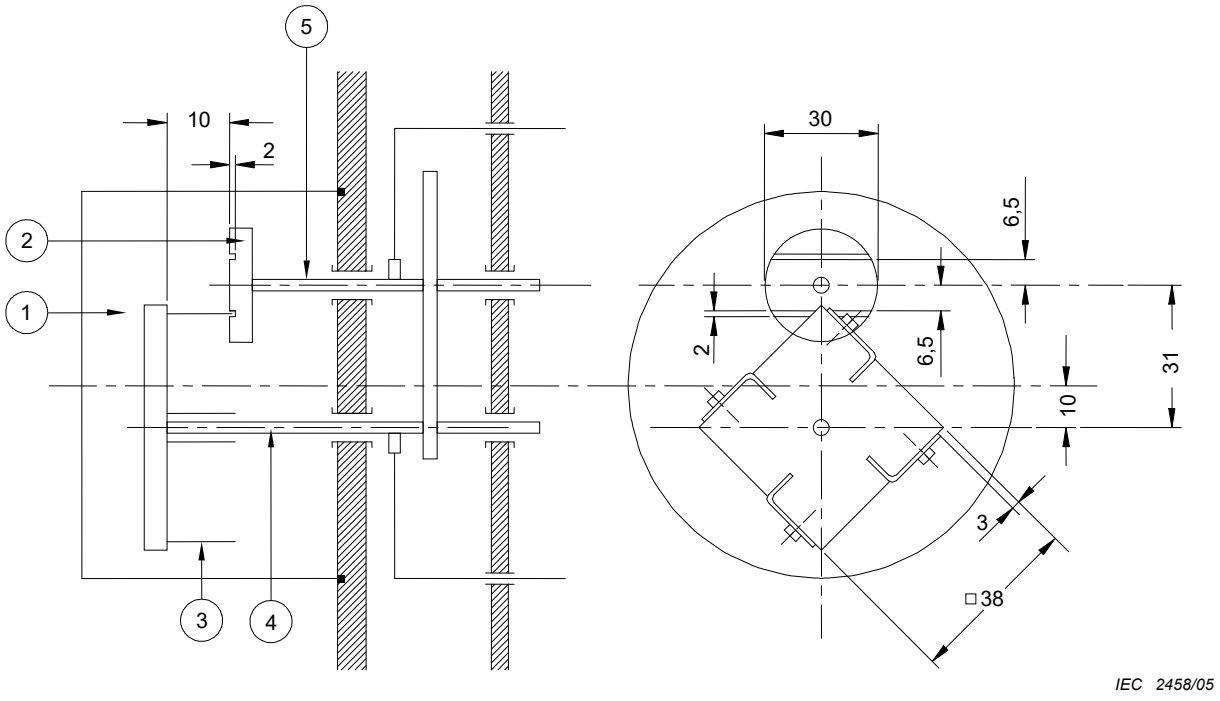

Dimensions in millimetres

Legend

1 Ignition space
2 Cadmium disk
3 Tungsten wire
4 Shaft of wire disk
5 Shaft of disk with grooves

Figure G.7 – Test apparatus

Copyright International Electrotechnical Commission
Provided by IHS Markit under license with IEC
No reproduction or networking permitted without license from IHS
Not for Resale, 08/26/2020 19:12:41 MDT

Annex H
(informative)

PEMS structure, PEMS DEVELOPMENT LIFE-CYCLE and documentation

H.1 Examples for PEMS/PESS structures

A PEMS can be a very simple piece of ME EQUIPMENT or a complex ME SYSTEM or anything in between.

Figure H.1 shows some possible examples of a PEMS.

Figure H.1 a) shows a complex system. The PEMS breaks down into a number of major subsystems, which in turn are made up of subsystems, which include a PESS.

Figure H.1 b) shows a simpler implementation. In this case the intermediate major subsystem level is missing and the PESS is a subsystem of the PEMS itself.

Figure H.1 c) illustrates the simplest implementation of a PEMS. In this case the PEMS and the PESS are the same.

The structure of the PEMS is extremely important for implementing safety requirements. An architecture should be documented for the PEMS that describes the structure of the PEMS and the relationship between each PESS and the PEMS as a whole. The architecture should indicate:

– the division of the PEMS into components, especially those implemented in each PESS and including software components;
– the functions to be performed by each PESS and its components (including where appropriate safety-related functions);
– the interfaces between software components;
– the interfaces between software components and components external to the software.

H.2 PEMS DEVELOPMENT LIFE-CYCLE model

Compliance with the PEMS clause of this standard (Clause 14) requires that a PEMS DEVELOPMENT LIFE-CYCLE be specified and then followed; it does not require that any particular PEMS DEVELOPMENT LIFE-CYCLE is used, but it does require that the PEMS DEVELOPMENT LIFE-CYCLE has certain attributes. These requirements can be found in 14.4.

The PEMS DEVELOPMENT LIFE-CYCLE is a part of the overall product life-cycle.

Figure H.2 is a view of the PEMS DEVELOPMENT LIFE-CYCLE which shows activities grouped into two main PROCESSES. On the left is decomposition PROCESS and on the right is the integration PROCESS.

Figure H.2 illustrates:

– layered design activities;
– for each layer of design, a corresponding layer of integration and VERIFICATION;
– verified parts are integrated to assemble the next higher layer;
– problem resolution PROCESS interactions.

Copyright International Electrotechnical Commission
Provided by IHS Markit under license with IEC
No reproduction or networking permitted without license from IHS Not for Resale, 08/26/2020 19:12:41 MDT

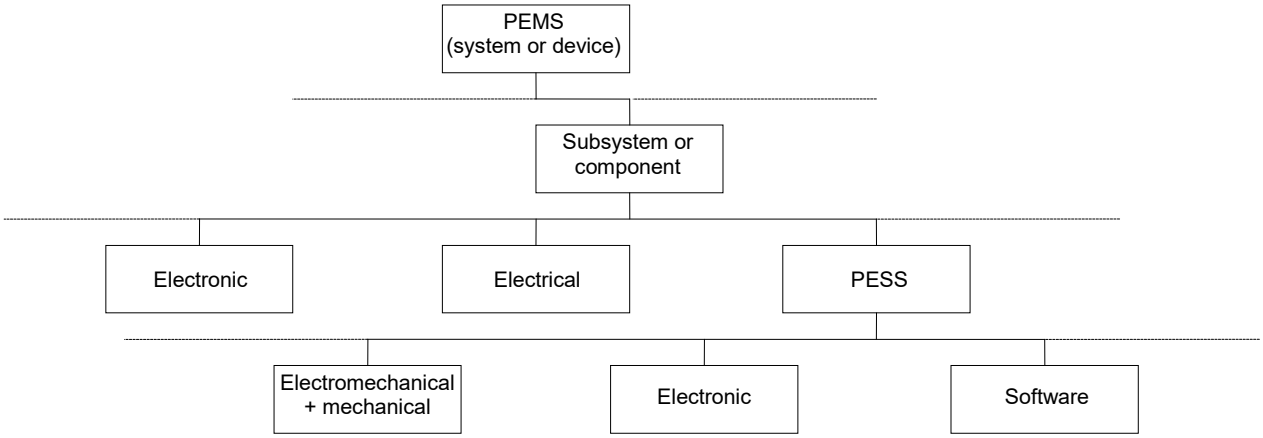

a) Example of a complex system

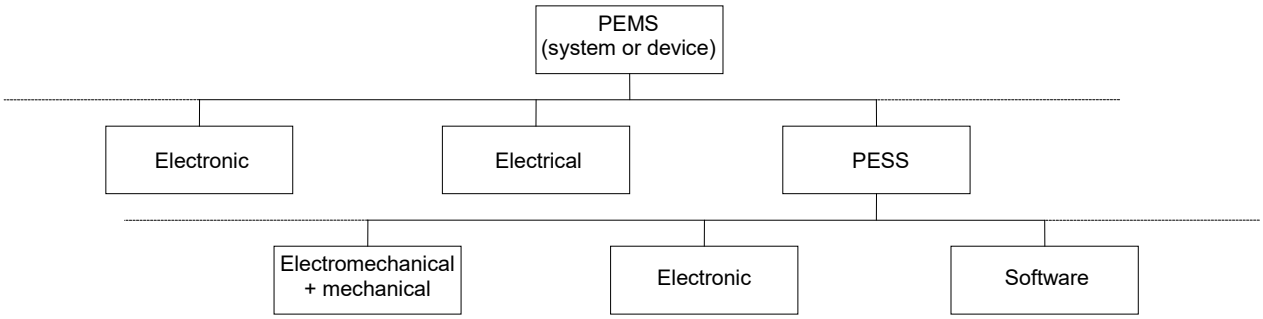

b) Example of a simpler implementation

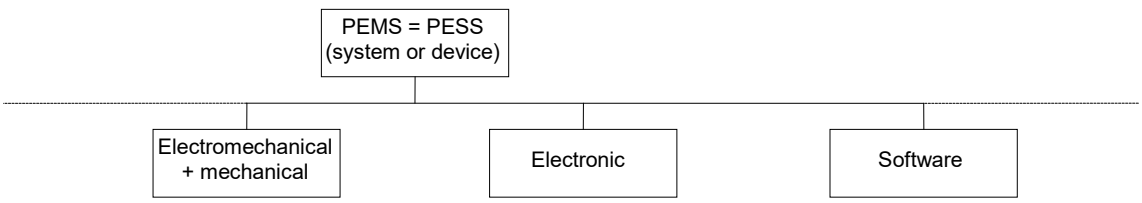

c) Example of the simplest implementation

IEC 2459/05

Figure H.1 – Examples of PEMS/ PESS structures

Copyright International Electrotechnical Commission
Provided by IHS Markit under license with IEC
No reproduction or networking permitted without license from IHS
Not for Resale, 08/26/2020 19:12:41 MDT

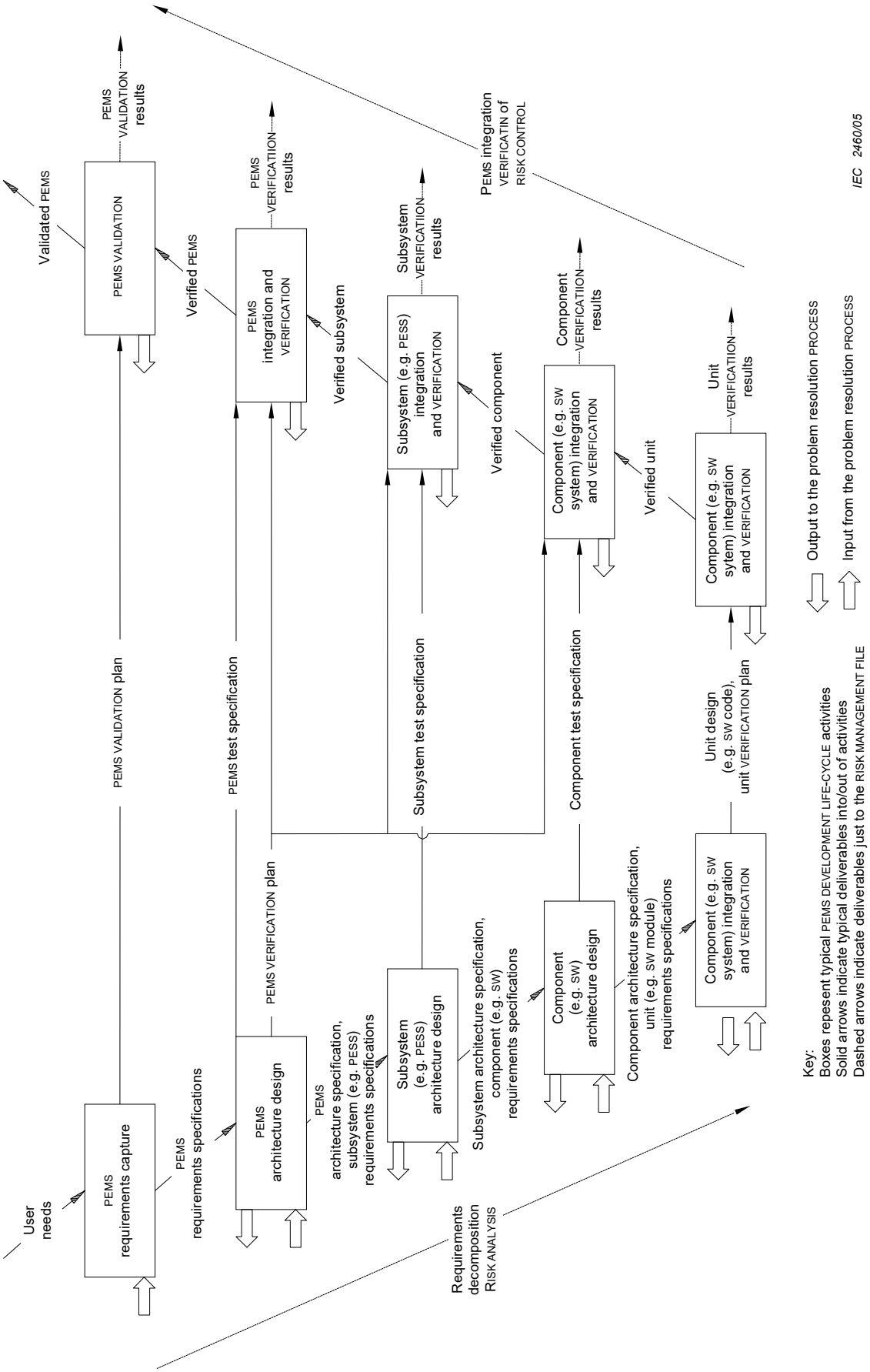

Figure H.2 – A PEMS DEVELOPMENT LIFE-CYCLE model

Copyright International Electrotechnical Commission
Provided by IHS Markit under license with IEC
No reproduction or networking permitted without license from IHS
Not for Resale, 08/26/2020 19:12:41 MDT

As the design is decomposed from the requirements, the functional building blocks, architecture and technology are decided. The decomposition PROCESS concludes when the design information enables the components of the PEMS to be built (examples of such design information are circuit diagrams and software code). The decomposition components are integrated together. VERIFICATION is performed as the components are integrated to determine whether or not the implementation satisfies the requirements. At the conclusion of the integration PROCESS, a PEMS VALIDATION is performed to determine whether or not the PEMS works as intended.

H.3 Software PROCESSES

IEC 62304 describes the processes to be included in the software development life-cycle for the development of safe medical device software.

H.4 Design and implementation

During application of the PEMS DEVELOPMENT LIFE-CYCLE model, design and implementation will include the selection of:

a) the design environment, for example:
   - software development methods;
   - computer aided software engineering (CASE) tools;
   - programming language;
   - hardware and software development platforms;
   - simulation tools;
   - design and coding standards;
b) electronic components;
c) redundant hardware;
d) human-PEMS interface;
e) energy sources;
f) environmental conditions;
g) third-party software;
h) networking options.

These elements of the design environment can be characterized in general and in the specific manner of their use in the design and implementation PROCESS.

H.5 Documentation

Not used.

Copyright International Electrotechnical Commission
Provided by IHS Markit under license with IEC
No reproduction or networking permitted without license from IHS Not for Resale, 08/26/2020 19:12:41 MDT

Figure H.3 – Not used

H.6 PEMS intended to be incorporated into an IT-NETWORK

H.6.1 General

In the context of this standard, the information transmitted over an IT-NETWORK is that intended by the MANUFACTURER to be transmittable (i.e. not through illegal or illicit actions of unauthorized persons).

H.6.2 System integration responsibilities

ME EQUIPMENT and ME SYSTEMS will sometimes be used together on an IT-NETWORK. This is likely to become more frequent with the increasing use of computers to analyze clinical data and control treatment.

Sometimes ME EQUIPMENT will have been designed by the MANUFACTURER to work on an IT-NETWORK with other ME EQUIPMENT, however, it will often be the case that ME EQUIPMENT will not have been designed to work with all other ME EQUIPMENT on an IT-NETWORK. Someone has to be responsible for ensuring that all the separate ME EQUIPMENT on an IT-network work together satisfactorily; in other words, someone has to be responsible for designing the IT-NETWORK.

It is recognized that the IT-NETWORK integrator often has to comply with particular regulatory requirements.

In order to perform its function, the IT-NETWORK integrator needs to know:

– how the integrated IT-NETWORK is intended to be used;
– the required performance of the integrated IT-NETWORK;
– the intended configuration of the IT-NETWORK;
– the constraints on the extendibility of the IT-NETWORK;
– the specifications of all ME EQUIPMENT and other equipment to be integrated;
– the performance of each ME EQUIPMENT and other equipment; and
– the information flow in and around the IT-NETWORK.

This information will not be available to the individual MANUFACTURERS, and for this reason each individual MANUFACTURER cannot carry out the role of IT-NETWORK integrator. In any case the IT-NETWORK integrator has to be a single person or organisation that has overall responsibility, this overall responsibility can not be shared between several different MANUFACTURERS. The responsibility of a MANUFACTURER is limited to providing the required information on their equipment (see 14.13).

Obviously a RESPONSIBLE ORGANIZATION can employ a MANUFACTURER to integrate their IT-NETWORK. In this case the whole IT-NETWORK can become an ME SYSTEM and it will be the MANUFACTURER'S responsibility to provide a correctly integrated system. In this case the system could be separately regulated.

The IT-NETWORK integrator should be competent to assess and address the HAZARDS that are likely to arise from integrating a IT-NETWORK and to ensure that the RESIDUAL RISKS of the individual PEMS are maintained.

Typically a IT-NETWORK integrator would:

– plan the integration of any ME EQUIPMENT or ME SYSTEM and non-medical equipment in accordance with the instructions provided by the various MANUFACTURERS;
– perform RISK MANAGEMENT on the integrated IT-NETWORK; and

Copyright International Electrotechnical Commission
Provided by IHS Markit under license with IEC
No reproduction or networking permitted without license from IHS Not for Resale, 08/26/2020 19:12:41 MDT

– pass on any MANUFACTURER'S instructions to the RESPONSIBLE ORGANIZATION where these are required for the safe operation of the integrated IT-NETWORK. These instructions should include warnings about the HAZARDS of any change of configuration.

H.7 Design considerations for IT-NETWORKS

H.7.1 Overview

From the viewpoint of a PEMS MANUFACTURER, any type of an IT-NETWORK is a source of additional HAZARDOUS SITUATIONS. In principle any IT-NETWORK that is outside the control of the PEMS MANUFACTURER should never be presumed to be 100 % reliable.

H.7.2 Causes of HAZARDOUS SITUATIONS associated with IT-NETWORKS

In IT-NETWORKS, likely causes for HAZARDOUS SITUATIONS are:

– loss of data;
– inappropriate data interchange;
– corrupted data;
– inappropriate timing of data;
– unexpected receipt of data;
– unauthorized access to data.

Supplementing Annex C of ISO 14971:2019, at least the following initiating events or circumstances that can lead to HAZARDOUS SITUATIONS associated with IT-NETWORKS should be considered:

– remote servicing (external access to the network);
– operating system (compatibility of operating systems);
– modification/upgrades of software (operating systems, applications, etc.);
– interface compatibility (data collisions, data formats):
  - connections (modification of hardware, network connectors);
  - network interface boards (compatibility);
  - network protocols (DICOM, HL7, etc.);
– packet address structure/timing;
– normal network loads/bandwidth;
– peak network load;
– data media (longevity and retrievability);
– security (viruses, worms, unauthorized software updates or upgrades);
– maximum acceptable response time;
– acceptable failure rate of the network;
– availability of the network (planned and unplanned maintenance);
– inconsistency in interfaces/formats resulting in loss of fidelity during information transfer;
– heterogeneous network topologies.

The following questions should be taken into account when identifying the characteristics that could impact on safety:

a) Reasonably foreseeable misuses

   Is connection to the network inconsistent with the INTENDED USE of each constituent PEMS?

Copyright International Electrotechnical Commission
Provided by IHS Markit under license with IEC
No reproduction or networking permitted without license from IHS Not for Resale, 08/26/2020 19:12:41 MDT

b) Incorrect data flow to or from each constituent PEMS

What are the data transferred by the network used for, and to which tasks are they related? What are the consequences of a breakdown of the IT-NETWORK ?

c) Deviation from the specified operational characteristics of any constituent PEMS

What are the operational characteristics of the PEMS and to what degree are they affected by the IT-NETWORK?

d) Incomplete characterization of IT-NETWORK parameters

Is the network topology, configuration, parameters (e.g. open or closed, bandwidth, transmission protocol) completely characterized? Are there any breakdown characteristics/concepts and what are these?

e) Excessive use/load of the IT-NETWORK by the network nodes

What is the planned number of network nodes and their assumed degree of use? Are the resources sufficient to meet the needs of both the IT-NETWORK itself and the devices connected to it?

f) Use errors

What skills are required by the OPERATOR for the effective operation of the system?

g) Inadequate configuration management

Do periodic service tasks alter the IT-NETWORK'S characteristics (e.g. after remote access, updates or upgrades)? Does the RESPONSIBLE ORGANIZATION ensure that modifications to each constituent PEMS are reviewed and approved?

h) Information in wrong place

Does data arrive at a convenient and predictable location? Is it accompanied by irrelevant data that could confuse the OPERATOR or obscure the wanted data? When it arrives, is its source adequately indicated?

H.7.3 Not used

Table H.1 – Not used

H.7.4 IT-NETWORK parameters

The use of an IT-NETWORK for exchange of data either between PEMS or between PEMS and other information technology equipment requires the knowledge about both the structure of the IT-NETWORK and the PROCESSES/functions running inside them. This is important because MANUFACTURERS of PEMS or IT-NETWORKS should select the configuration of their products such that:

– they comply with internationally recognized network standards (Ethernet, Fast Ethernet, GigaBitEthernet, FDDI, etc.) and use the available bandwidth appropriately according to the INTENDED USE;

– they achieve the optimal performance for their application

A mixture of different IT-NETWORK configurations/parameter settings can emerge which are not always compatible for the different IT-NETWORK nodes in spite of the fact that they comply to valid international standards.

To avoid or at least to minimize the resulting potential of disruption, a match of a minimum set of IT-NETWORK parameters derived from the relevant standards is required.

Figure H.4 contains a list of parameters potentially required to be specified. Due to the rapid evolution of IT-NETWORK technology, this table should be seen as a starting point. It should be clear if the table should be maintained and who should be responsible for maintaining it.

Copyright International Electrotechnical Commission
Provided by IHS Markit under license with IEC
No reproduction or networking permitted without license from IHS Not for Resale, 08/26/2020 19:12:41 MDT

Objects	Description		Value/Comment
Application and Operating System:			
Operating System / Version:			
Network protocols:			
Detailed data for specific application / transport protocol (if used)			
HL7	HL 7 version		
	Formats of message types used		
	Free fields (that are used)		
	Ports		
	HL7 Protocol (TCP/IP Lower Layer)		
DICOM Service classes	**A) Test:**	Verification	
	B) Transfer:	Storage	
		Query/Retrieve	
	C) Documentation:	Print management	
	D) Organization:	Modality work list management	
		Performed procedure step	
	E) Information:	Study contents notification	
		Patient management	
		Storage commitment	
		Study component management	
		Results management	
	F) External Storage:	Media storage	
DICOM Objects	e.g. COMPUTER RADIOGRAPHY IMAGE		
	Other Modality Objects		
DICOM host name			
DICOM AET called			
DICOM AET calling			
DICOM Port called			
DICOM Port calling			
Detailed Parameters with respect to the lower protocol layers			
Network data	**Physical connection**		
	Network interface card parameters		
Network-Administration			
Port number of connected Switch / HUB / Router			
IP-Address			
Subnet mask			
Host-Name			
IT-Domain			
Active-Directory / LDAP Server			
Default Gateway (Access via Router)			
Remote Control			
Remote Monitoring			
Modem Connection			
Remote Service IP-Address			
Other Parameters			

Figure H.4 – Example of potential parameters required to be specified for an IT-NETWORK

Copyright International Electrotechnical Commission
Provided by IHS Markit under license with IEC
No reproduction or networking permitted without license from IHS Not for Resale, 08/26/2020 19:12:41 MDT

Annex I
(informative)

ME SYSTEMS aspects

I.1 Combinations of ME EQUIPMENT and non-ME EQUIPMENT

I.1.1 Introduction

This annex provides a summary of situations that could occur when different combinations of equipment are used in various medical environments. To keep this summary short, no more than two items of equipment (A and B) are used per situation.

I.1.2 Localities in a medical environment

The following localities are foreseen (see also Table I.1):

– the PATIENT ENVIRONMENT as part of a medically used room;

– a medically used room, excluding the PATIENT ENVIRONMENT;

– the non-medically used room (a room not designed for medical treatment, for example, an office or a storage room).

A protective earth can be dedicated to each of the three localities listed above.

NOTE A potential difference *(V)* can exist between the protective earths in different localities. In case of an interruption of protective earthing (fault condition) for equipment in the PATIENT ENVIRONMENT, this potential difference can appear on the ENCLOSURE of the equipment resulting in a HAZARDOUS SITUATION for the OPERATOR or for the PATIENT if the OPERATOR simultaneously touches the equipment and the PATIENT, or for the PATIENT if the APPLIED PART is of TYPE B.

I.1.3 Basic principles

– PATIENTS should only be connected to APPLIED PARTS of ME EQUIPMENT complying with this standard. Other equipment should comply with relevant IEC or ISO standards.

– In fault condition the allowable TOUCH CURRENT is 500 μA.

– All equipment complying with the safety standard applicable to the originally intended, non-medical use, herein called IEC XXXXX, and placed in the PATIENT ENVIRONMENT needs measures to limit the TOUCH CURRENT, if this exceeds the values specified in 16.6.1.

I.1.4 Examples of ME SYSTEMS

Two items of equipment are placed within the PATIENT ENVIRONMENT (see situation No. 1 in Table I.1).

There are several possibilities designated 1a through 1f:

1a: Items A and B both comply with IEC 60601: Subclause 16.6 is satisfied.

1b: Items A and B both comply with IEC 60601 and are powered through a MULTIPLE SOCKET-OUTLET: LEAKAGE CURRENTS might be too high when the earth conductor in the MULTIPLE SOCKET-OUTLET is broken.

1c: Item A complies with IEC 60601 and item B complies with IEC XXXXX: only the TOUCH CURRENT of item B has to be limited when any single PROTECTIVE EARTH CONDUCTOR or the equivalent conductor of the equipment, is interrupted, if necessary, by applying an additional protective earth or a separating transformer to item B.

1d: Same as 1c, with both items powered through a MULTIPLE SOCKET-OUTLET: LEAKAGE CURRENTS might be too high for causes as listed under 1b and 1c.

--`,,```,,,,````-`-`,,`,,`,`,,`---
Copyright International Electrotechnical Commission
Provided by IHS Markit under license with IEC
No reproduction or networking permitted without license from IHS Not for Resale, 08/26/2020 19:12:41 MDT

1e: Item A is powered from item B with item A complying to IEC 60601 and being an insert to item B, complying to IEC XXXXX. Item B needs the measures for a power supply as described by the MANUFACTURER and needs to fulfil the requirement of 16.3. If necessary, apply an additional protective earth or a separating transformer to item B.

1f: Same as 1e, with item A not being an insert to item B: see 1e.

Situations 2 and 3 can be derived from situation 1 of Table I.1.

NOTE The practical means of compliance indicated in Table I.1 are not intended to be an exhaustive list.

Copyright International Electrotechnical Commission
Provided by IHS Markit under license with IEC
No reproduction or networking permitted without license from IHS Not for Resale, 08/26/2020 19:12:41 MDT

Table I.1 – Some examples of ME SYSTEMS for illustration

Situation No.		Medically used room		Non-medically used room	Examples of possible causes for exceeding LEAKAGE CURRENT limits	Practical means of compliance Apply 16.5 in all situations
		Inside the PATIENT ENVIRONMENT	Outside the PATIENT ENVIRONMENT			
1	**1a** Items A and B are ME EQUIPMENT	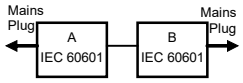			Multiplied APPLIED PARTS of the same type can cause the total PATIENT LEAKAGE CURRENT to exceed limits See Note 1.	– Verify total PATIENT LEAKAGE CURRENT
	1b Items A and B are ME EQUIPMENT powered via a MULTIPLE SOCKET-OUTLET	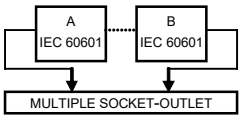			Earth conductor of the MULTIPLE SOCKET-OUTLET is broken See also 1a.	– Additional PROTECTIVE EARTH CONNECTION (for A or B) or, – Separating transformer
	1c Item A is ME EQUIPMENT and B is Non-ME EQUIPMENT	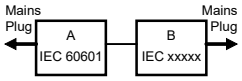			Due to high TOUCH CURRENT of B	– Additional PROTECTIVE EARTH CONNECTION (for B) or, – Separating transformer (for B)
	1d Item A is ME EQUIPMENT and B is non-ME EQUIPMENT powered via a MULTIPLE SOCKET-OUTLET	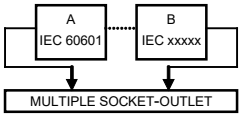			The earth conductor of the MULTIPLE SOCKET-OUTLET is broken or, Due to high TOUCH CURRENT of B	– Additional PROTECTIVE EARTH CONNECTION (for A or B) or, – Separating transformer
	1e Item A is ME EQUIPMENT powered from specified power supply in item B	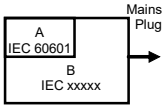			Due to high TOUCH CURRENT of B	– Additional PROTECTIVE EARTH CONNECTION (for B) or, – Separating transformer (for B)
	1f Item A is ME EQUIPMENT powered from NON-ME EQUIPMENT power supply in B	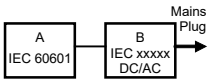				

Copyright International Electrotechnical Commission
Provided by IHS Markit under license with IEC
No reproduction or networking permitted without license from IHS
Not for Resale, 08/26/2020 19:12:41 MDT

Table I.1 *(continued)*

Situation No.		Medically used room: Inside the PATIENT ENVIRONMENT	Medically used room: Outside the PATIENT ENVIRONMENT	Non-medically used room	Examples of possible causes for exceeding LEAKAGE CURRENT limits	Practical means of compliance Apply 16.5 in all situations
2	**2a** Items A and B are ME EQUIPMENT				No causes of exceeding LEAKAGE CURRENT	– No further measures are necessary
	2b Items A and item B are ME EQUIPMENT powered via a MULTIPLE SOCKET-OUTLET	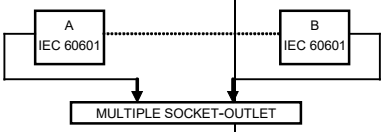			Earth conductor of the MULTIPLE SOCKET-OUTLET is broken	– Additional PROTECTIVE EARTH CONNECTION (for A or B) or, – Separating transformer
	2c Item A is ME EQUIPMENT and item B is non-ME EQUIPMENT				Due to high TOUCH CURRENT of B See rationale for 16.5.	– Do not use metal connector housing or, – SEPARATION DEVICE
	2d Item A is ME EQUIPMENT and item B is non-ME EQUIPMENT powered via a MULTIPLE SOCKET-OUTLET	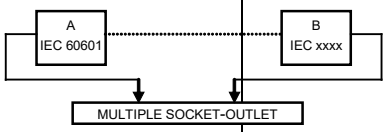			The earth conductor of the MULTIPLE SOCKET-OUTLET is broken	– Additional PROTECTIVE EARTH CONNECTION (for A or B) or, – Separating transformer
3	**3a** Items A and B are ME EQUIPMENT	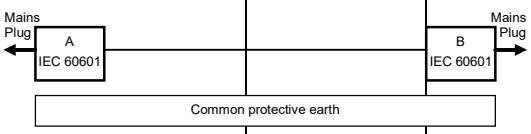			No causes of exceeding LEAKAGE CURRENT	– No further measures are necessary
	3b Item A is ME EQUIPMENT and item B is non-ME EQUIPMENT	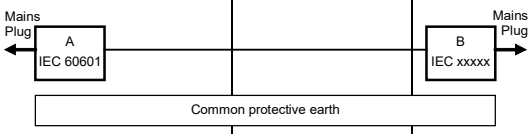			Due to high TOUCH CURRENT of B See rationale for 16.5.	– Do not use metal connector housing for SIGNAL INPUT/OUTPUT PART or, – SEPARATION DEVICE
	3c Item A is ME EQUIPMENT and item B in is ME EQUIPMENT or non-ME EQUIPMENT	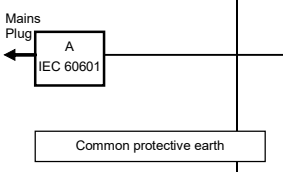	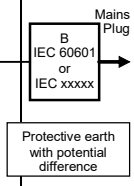		a) Potential difference between PROTECTIVE EARTH CONNECTIONS of A and B b) Due to high TOUCH CURRENT of B See rationale for 16.5.	– Additional PROTECTIVE EARTH CONNECTION for (A), or – SEPARATION DEVICE, or – Do not use metal connector housing in the PATIENT ENVIRONMENT

Copyright International Electrotechnical Commission
Provided by IHS Markit under license with IEC
No reproduction or networking permitted without license from IHS
Not for Resale, 08/26/2020 19:12:41 MDT

Table I.1 *(continued)*

NOTE 1 No causes of TOUCH CURRENT or EARTH LEAKAGE CURRENT exceeding limits.
NOTE 2 IEC 60601: MEDICAL ELECTRICAL EQUIPMENT in compliance with IEC 60601.
NOTE 3 IEC xxxxx: Non-medical equipment in compliance with relevant IEC safety standards.
NOTE 4 Separating transformer: see 16.9.2.1.
NOTE 5 If equipment "B" is outside the PATIENT ENVIRONMENT and if equipment "A" is a CLASS II equipment and has accessible conductive parts connected to the PROTECTIVE EARTH CONNECTION of equipment "B" then additional safety measures could be necessary, for example: additional protective earth for "B" or separating transformer or SEPARATION DEVICE.

I.2 Examples of application of MULTIPLE SOCKET-OUTLETS (MSO)

Figure I.1 shows an example of the construction of a MULTIPLE SOCKET-OUTLET. Figure I.2 shows some examples of application of MUPTILE SOCKET-OUTLETS.

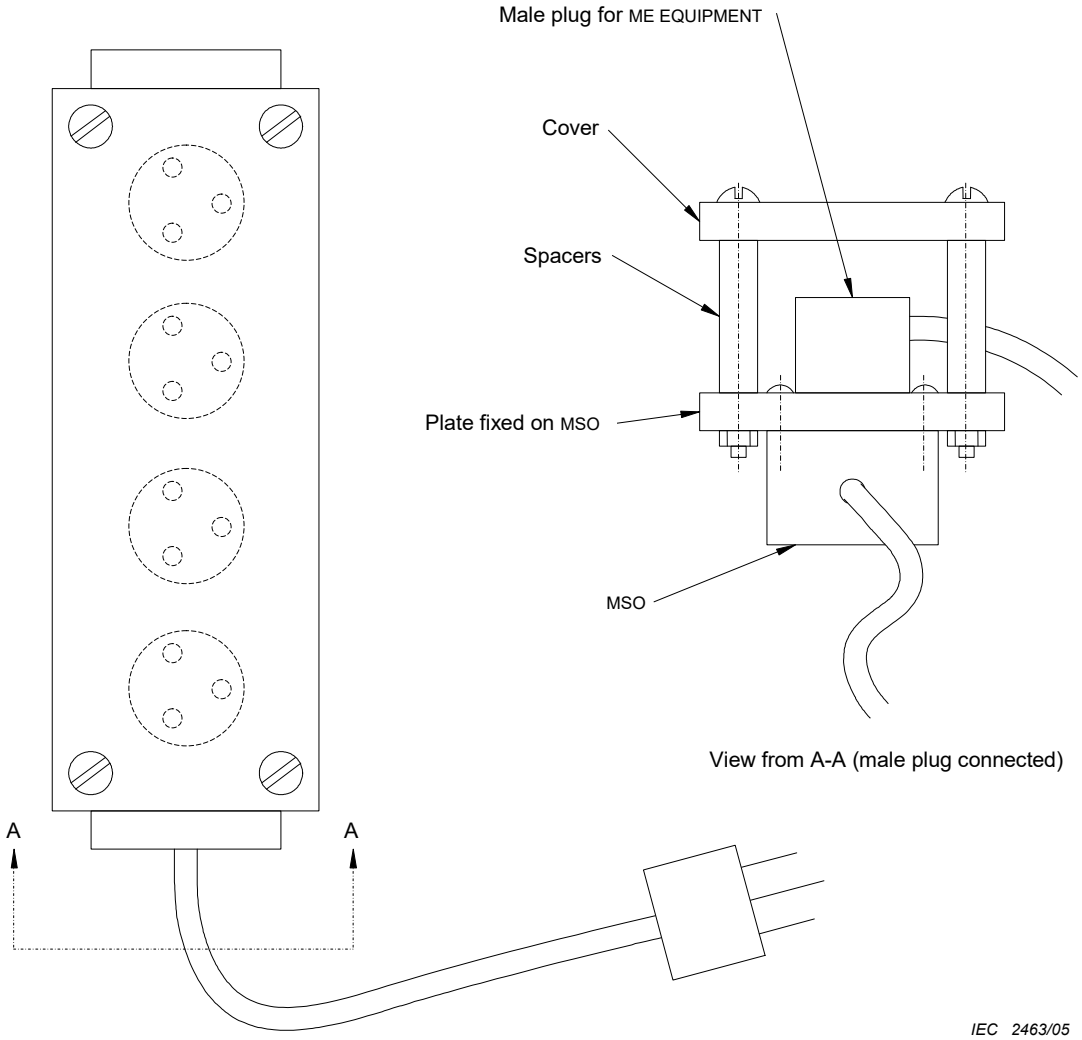

Figure I.1 – Example of the construction of a MULTIPLE SOCKET-OUTLET (MSO) (accessible only with the use of a TOOL)

--`,,`,,`-`-`,,`,,`,`,,`---

Copyright International Electrotechnical Commission
Provided by IHS Markit under license with IEC
No reproduction or networking permitted without license from IHS Not for Resale, 08/26/2020 19:12:41 MDT

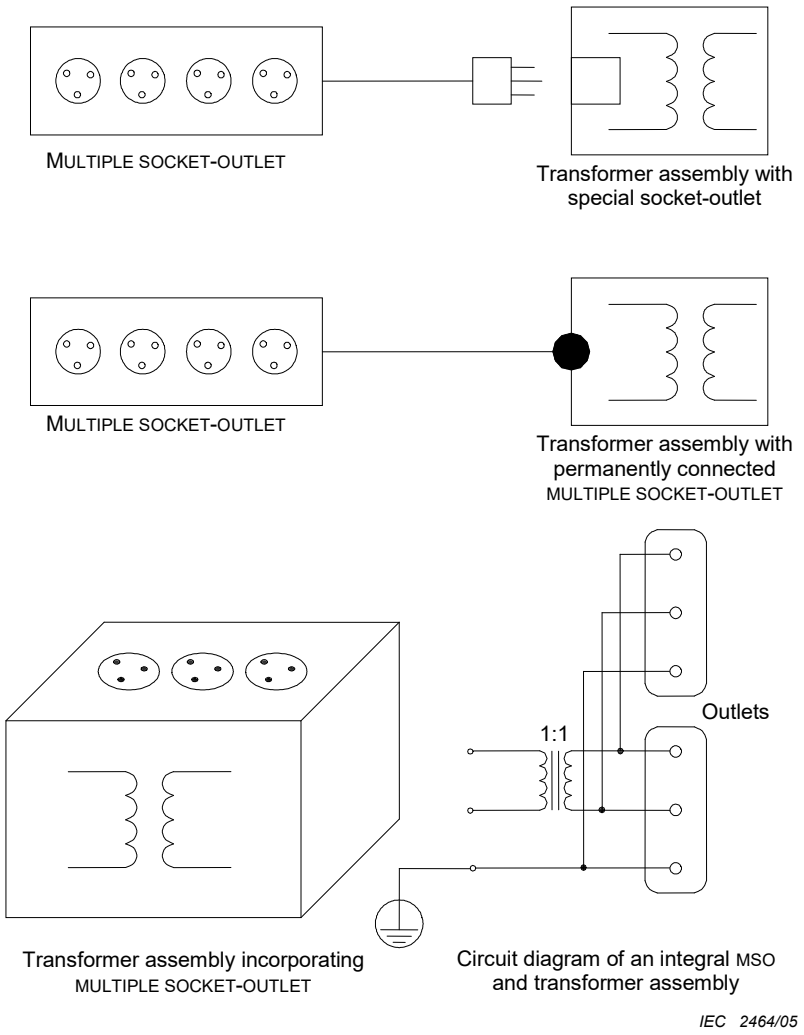

Figure I.2 – Examples of application of MULTIPLE SOCKET-OUTLETS (MSO)

Copyright International Electrotechnical Commission
Provided by IHS Markit under license with IEC
No reproduction or networking permitted without license from IHS
Not for Resale, 08/26/2020 19:12:41 MDT

Annex J
(informative)

Survey of insulation paths

(see 8.5.1)

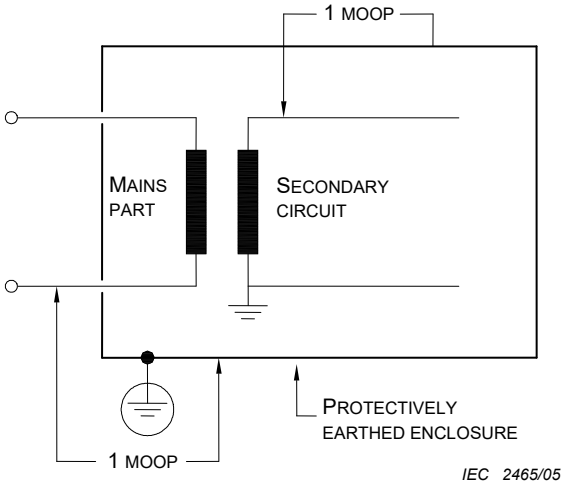

Figure J.1 – Insulation example 1

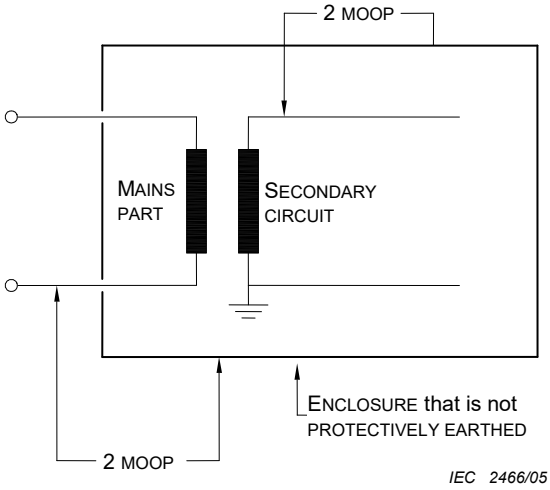

Figure J.2 – Insulation example 2

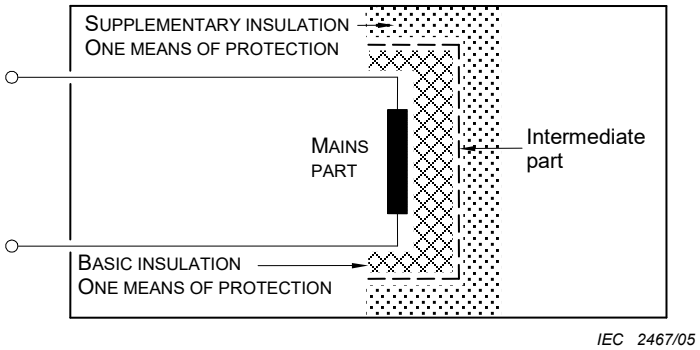

Figure J.3 – Insulation example 3

Copyright International Electrotechnical Commission
Provided by IHS Markit under license with IEC
No reproduction or networking permitted without license from IHS
Not for Resale, 08/26/2020 19:12:41 MDT

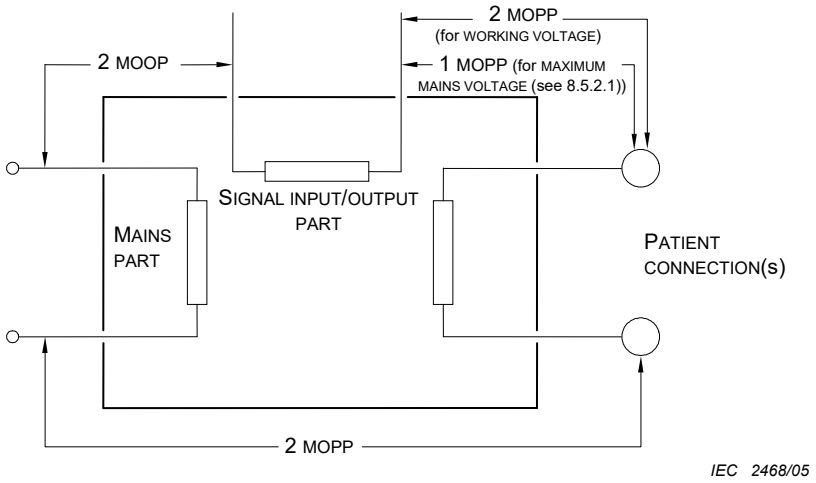

Figure J.4 – Insulation example 4

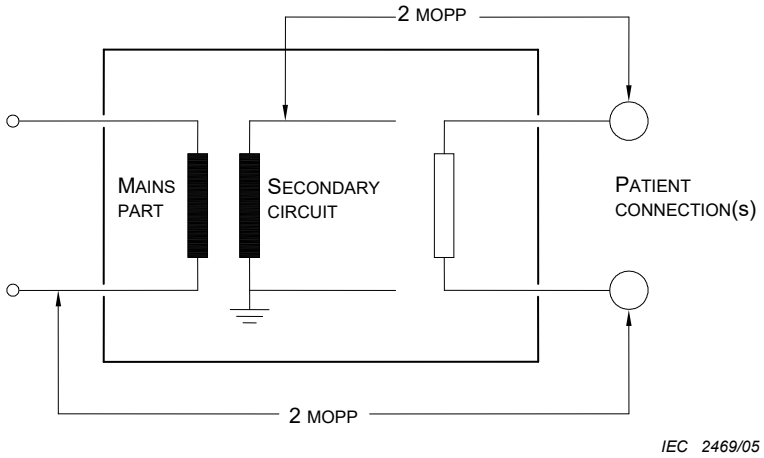

Figure J.5 – Insulation example 5

Copyright International Electrotechnical Commission
Provided by IHS Markit under license with IEC
No reproduction or networking permitted without license from IHS
Not for Resale, 08/26/2020 19:12:41 MDT

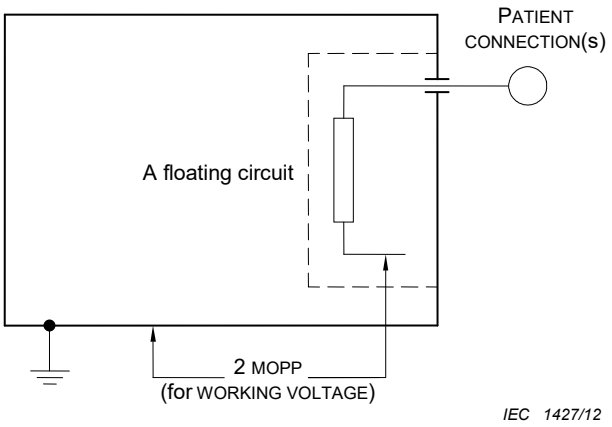

Figure J.6 – Insulation example 6

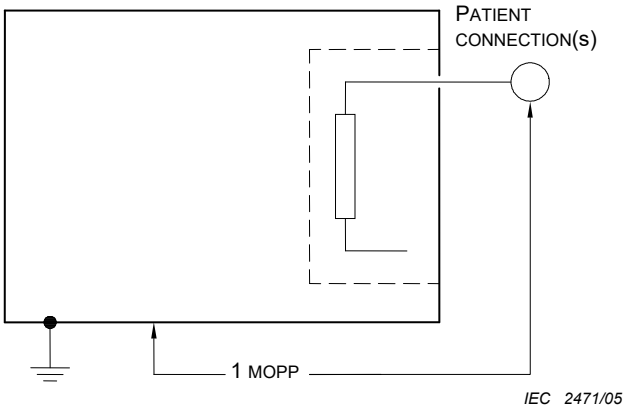

NOTE WORKING VOLTAGE is the MAXIMUM MAINS VOLTAGE.

Figure J.7 – Insulation example 7

--`,,```,,,,````-`-`,,`,,`,`,,`---

Copyright International Electrotechnical Commission
Provided by IHS Markit under license with IEC
No reproduction or networking permitted without license from IHS
Not for Resale, 08/26/2020 19:12:41 MDT

Annex K
(informative)

Simplified PATIENT LEAKAGE CURRENT diagrams

Figure K.2, Figure K.4 and Figure K.5 illustrate a special test condition in Table 4, which is neither a NORMAL CONDITION nor a SINGLE FAULT CONDITION.

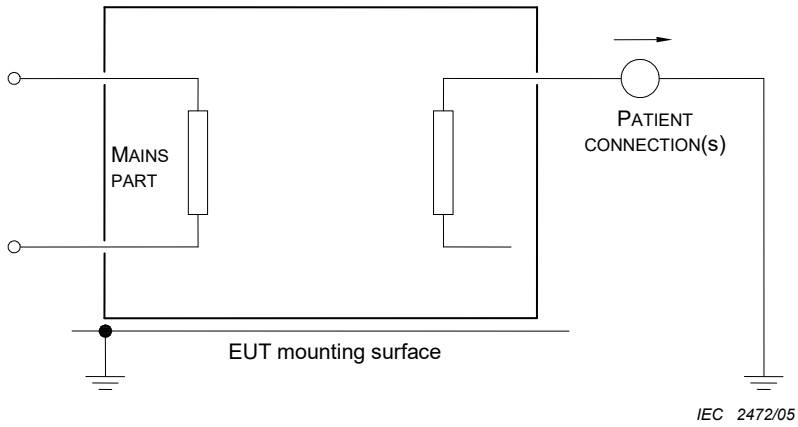

Current in μA

APPLIED PART TYPE	NORMAL CONDITION	SINGLE FAULT CONDITION
CF	10	50
BF	100	500
B	100	500

Example with the measuring supply circuit of Figure F.1.

Figure K.1 – ME EQUIPMENT with an ENCLOSURE made of insulating material
(simplified Figure 15)
(see 8.7.4.7 a))

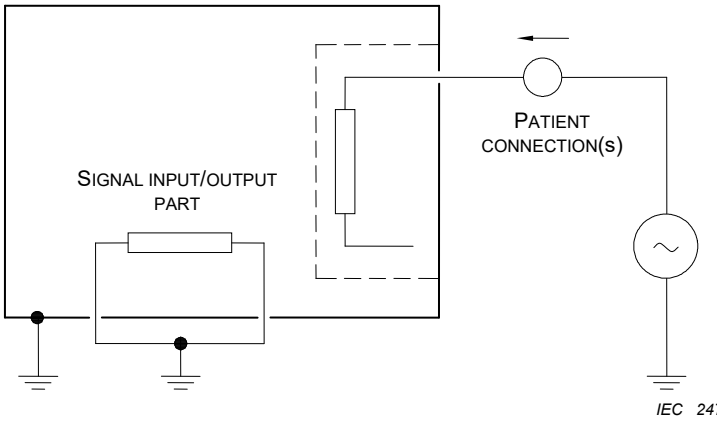

Current in μA

APPLIED PART TYPE	Special test condition
CF	50
BF	5 000
B	—

Example with the measuring supply circuit of Figure F.1.

Figure K.2 – ME EQUIPMENT with an F-TYPE APPLIED PART
(simplified Figure 16)
(see 8.7.4.7 b))

--`,,```,,,,````-`-`,,`,,`,`,,`---

Copyright International Electrotechnical Commission
Provided by IHS Markit under license with IEC
No reproduction or networking permitted without license from IHS
Not for Resale, 08/26/2020 19:12:41 MDT

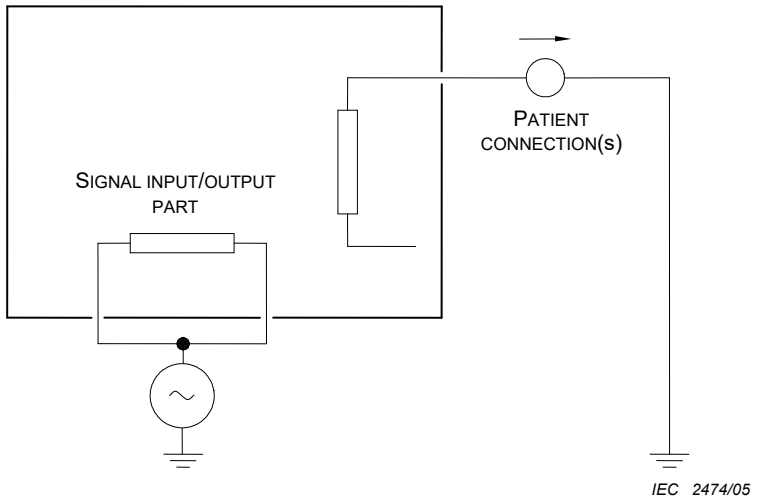

Current in μA

APPLIED PART TYPE	NORMAL CONDITION	SINGLE FAULT CONDITION
CF	10	50
BF	100	500
B	100	500

Example with the measuring supply circuit of Figure F.1.

Figure K.3 – ME EQUIPMENT with an APPLIED PART and a SIGNAL INPUT/OUTPUT PART
(simplified Figure 17)
(see 8.7.4.7 c))

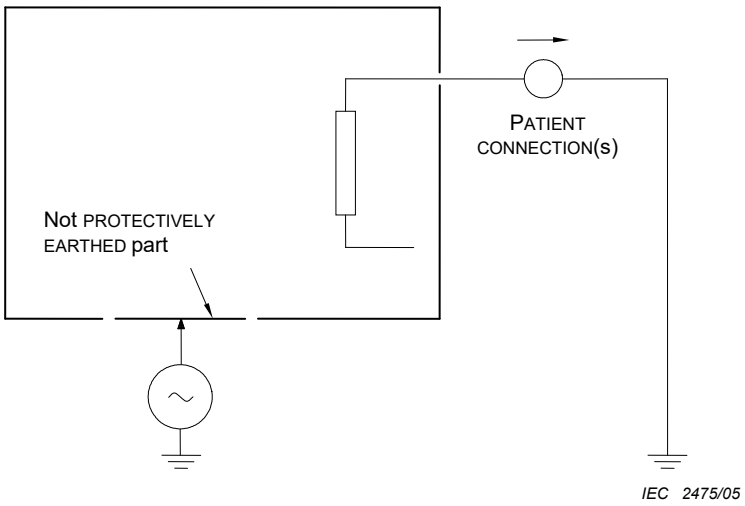

Current in μA

APPLIED PART TYPE	Special test condition
CF	—
BF	—
B	500

Example with the measuring supply circuit of Figure F.1.

Figure K.4 – ME EQUIPMENT with a PATIENT CONNECTION of a TYPE B APPLIED PART that is not PROTECTIVELY EARTHED
(simplified Figure 18)
(see 8.7.4.7 d))

Copyright International Electrotechnical Commission
Provided by IHS Markit under license with IEC
No reproduction or networking permitted without license from IHS
Not for Resale, 08/26/2020 19:12:41 MDT

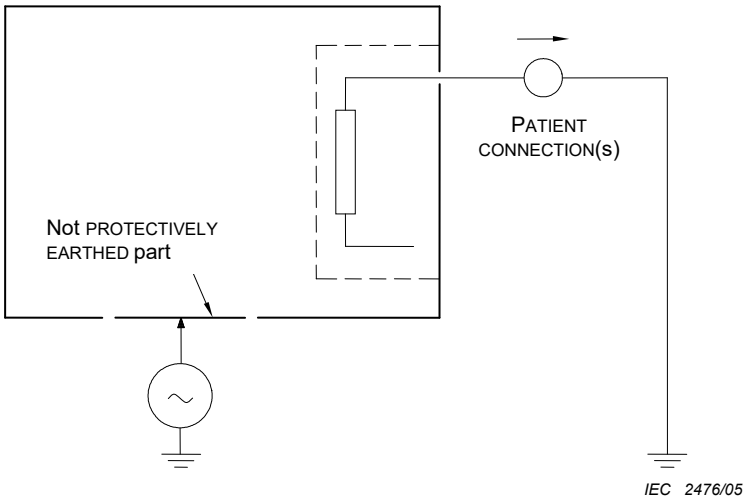

Current in μA

APPLIED PART TYPE	Special test condition
CF	—
BF	500
B	—

Example with the measuring supply circuit of Figure F.1.

Figure K.5 – ME EQUIPMENT with a PATIENT CONNECTION of a TYPE BF APPLIED PART that is not PROTECTIVELY EARTHED
(simplified Figure 18)
(see 8.7.4.7 d))

Copyright International Electrotechnical Commission
Provided by IHS Markit under license with IEC
No reproduction or networking permitted without license from IHS
Not for Resale, 08/26/2020 19:12:41 MDT

Annex L
(normative)

Insulated winding wires for use without interleaved insulation
(see 8.8.2)

L.1 Introduction

This annex specifies winding wire whose insulation may be used to provide BASIC INSULATION, SUPPLEMENTARY INSULATION, DOUBLE INSULATION or REINFORCED INSULATION in wound components without interleaved insulation.

This annex covers round winding wires having diameters between 0,05 mm and 5,00 mm.

For insulated winding wires used as MEANS OF OPERATOR PROTECTION (MOOP), an alternative test method according to IEC 62368-1:2018, G.5.3.4 is considered acceptable.

L.2 Wire construction

If the wire is insulated with two or more spirally wrapped layers of tape, the overlap of layers shall be adequate to ensure continued overlap during manufacture of the wound component. The layers of spirally wrapped wire insulation shall be sufficiently secured to maintain the amount of overlap.

L.3 TYPE TEST

The wire shall pass the tests of L.3.1 to L.3.4, carried out at a temperature between 15 °C and 35 °C and a relative humidity between 45 % and 75 %, unless specified otherwise.

L.3.1 Dielectric strength

The test sample is prepared according to IEC 60851-5:2008, Subclause 4.4.1 (for a twisted pair). The sample is then subjected to the test of 8.8.3 for the appropriate type and number of MOP(s). The test voltage is at least twice the appropriate voltage in Table 6 and Table 7 (see 8.8.3), with a minimum of:

– *3 000 V for BASIC INSULATION or SUPPLEMENTARY INSULATION; or*

– *6 000 V for REINFORCED INSULATION.*

L.3.2 Flexibility and adherence

The sample is subjected to test 8 of IEC 60851-3:2009, Subclause 5.1.1, using the mandrel diameters of Table L.1. The test sample is then examined in accordance with IEC 60851-3:2009, Subclause 5.1.1.4, followed by the test of 8.8.3, for the appropriate type and number of MOP(s), except that the test voltage is applied between the wire and the mandrel. The test voltage is at least the appropriate voltage in Table 6 and Table 7 (see 8.8.3) with a minimum of:

– *1 500 V for BASIC INSULATION or SUPPLEMENTARY INSULATION; or*

– *3 000 V for REINFORCED INSULATION.*

Copyright International Electrotechnical Commission
Provided by IHS Markit under license with IEC
No reproduction or networking permitted without license from IHS Not for Resale, 08/26/2020 19:12:41 MDT

Table L.1– Mandrel diameter

NOMINAL conductor diameter mm	**Mandrel diameter** mm ± 0,2 mm
0,05 – 0,34	4,0
0,35 – 0,49	6,0
0,50 – 0,74	8,0
0,75 – 2,49	10,0
2,50 – 5,00	four times the conductor diameter [a]
[a] In accordance with IEC 60317-43 [9].	

The tension to be applied to the wire during winding on the mandrel is calculated from the wire diameter to be equivalent to 118 MPa ± 11,8 MPa (118 N/mm² ± 11,8 N/mm²).

L.3.3 Heat shock

The sample is subjected to test 9 of IEC 60851-6:1996, followed by the dielectric strength test of 8.8.3 for the appropriate type and number of MOP(s), except that the test voltage is applied between the wire and the mandrel. The voltage is not less than the appropriate voltage in Table 6 and Table 7 (see 8.8.3) with a minimum of:

– *1 500 V for BASIC INSULATION or SUPPLEMENTARY INSULATION; or*

– *3 000 V for REINFORCED INSULATION.*

The oven temperature is the relevant temperature for the thermal class of insulation in Table L.2.

The mandrel diameter and tension applied to the wire during winding on the mandrel are as in L.3.2.

The electric strength test is conducted at room temperature after removal from the oven.

Table L.2 – Oven temperature

Thermal class	**A (105)**	**E (120)**	**B (130)**	**F (155)**	**H (180)**
Oven temperature °C ± 5 °C	200	215	225	240	260

L.3.4 Retention of electric strength after bending

Five samples are prepared as in L.3.2 above and tested as follows. Each sample is removed from the mandrel, placed in a container and positioned so that it can be surrounded by at least 5 mm of metal shot. The ends of the conductor in the sample are to be sufficiently long to avoid flash over. The shot is to be not more than 2 mm in diameter and consists of balls of stainless steel, nickel or nickel plated iron. The shot is gently poured into the container until the sample under test is covered by at least 5 mm of shot. The shot is cleaned periodically with a suitable solvent (for example, 1,1,1-trichloroethane).

NOTE The above test PROCEDURE is reproduced from 4.6.1.c) of IEC 60851-5:1988 (second edition including amendment 1), now withdrawn. It is not included in the fourth edition of that standard.

Copyright International Electrotechnical Commission
Provided by IHS Markit under license with IEC
No reproduction or networking permitted without license from IHS Not for Resale, 08/26/2020 19:12:41 MDT

The test voltage is at least the appropriate test voltage in Table 6 and Table 7 (see 8.8.3) for the appropriate type and number of MOP(s), with a minimum of:

– *1 500 V for BASIC INSULATION or SUPPLEMENTARY INSULATION; or*

– *3 000 V for REINFORCED INSULATION.*

The test voltage is applied between the shot and the conductor.

The mandrel diameter and tension applied to the wire during winding on the mandrel are as in L.3.2.

L.4 Tests during manufacture

L.4.1 General

The wire is subjected by the wire manufacturer to electric strength tests during manufacture as specified in L.4.2 and L.4.3.

L.4.2 Routine testing

The test voltage for routine testing is to be the appropriate voltage in Table 6 and Table 7 (see 8.8.3) for the appropriate type and number of MOP(s), with a minimum of:

– *1 500 V r.m.s. or 2 100 V peak for BASIC INSULATION or SUPPLEMENTARY INSULATION; or*

– *3 000 V r.m.s. or 4 200 V peak for REINFORCED INSULATION.*

L.4.3 Sampling tests

Twisted pair samples are tested in accordance with IEC 60851-5:2008, Subclause 4.4.1. The minimum breakdown voltage is twice the appropriate voltage in Table 6 and Table 7 (see 8.8.3) for the appropriate type and number of MOP(s),with a minimum of:

– *3 000 V r.m.s. or 4 200 V peak for BASIC INSULATION or SUPPLEMENTARY INSULATION; or*

– *6 000 V r.m.s. or 8 400 V peak for REINFORCED INSULATION.*

--`,,```,,,,````-`-`,,`,,`,`,,`---

Copyright International Electrotechnical Commission
Provided by IHS Markit under license with IEC
No reproduction or networking permitted without license from IHS Not for Resale, 08/26/2020 19:12:41 MDT

Annex M
(normative)

Reduction of pollution degrees
(see 8.9.1.8)

Table M.1 shows additional protective measures that may be used to reduce the pollution degree.

Table M.1 – Reduction of the pollution degree of internal environment through the use of additional protection

Additional protection	From pollution degree 2 of external environment to:	From pollution degree 3 of external environment to:
ENCLOSURE IPX4 of IEC 60529	2	2
ENCLOSURE IPX5 or IPX6 of IEC 60529	2	2
ENCLOSURE IPX7 or IPX8 of IEC 60529	2 (see note)	2 (see note)
Hermetically sealed ENCLOSURE	1	1
Constantly heated	1	1
Encapsulated	1	1
Coated	1	2
NOTE Reduction can be to pollution degree 1, if the equipment is manufactured with a low internal humidity and the manufacturer's instructions specify that, after opening the ENCLOSURE, the ENCLOSURE is reassembled in a controlled humidity environment or a desiccant is used.		

Copyright International Electrotechnical Commission
Provided by IHS Markit under license with IEC
No reproduction or networking permitted without license from IHS
Not for Resale, 08/26/2020 19:12:41 MDT

Bibliography

[1] IEC 60050-151:2001, *International Electrotechnical Vocabulary (IEV) – Part 151: Electrical and magnetic devices*

[2] IEC 60050-195:1998, *International Electrotechnical Vocabulary (IEV) – Part 195: Earthing and protection against electric shock*

Amendment 1 (2001)

[3] IEC 60050-441:2001, *International Electrotechnical Vocabulary (IEV) – Chapter 441: Switchgear, controlgear and fuses*

[4] IEC 60050-826:2004, *International Electrotechnical Vocabulary (IEV) – Part 826: Electrical installations*

[5] IEC 60073, *Basic and safety principles for man-machine interface, marking and identification – Coding principles for indication devices and actuators*

[6] IEC 60086-1, *Primary batteries - Part 1: General*

[7] IEC 60127-6, *Miniature fuses – Part 6: Fuse holders for miniature fuse links*

[8] IEC 60309-1, *Plugs, socket-outlets and couplers for industrial purposes – Part 1: General requirements*

[9] IEC 60317-43, *Specifications for particular types of winding wires – Part 43:Aromatic polyimide tape wrapped round copper wire, class 240*

[10] IEC 60364-7-710, *Electrical installations of buildings – Part 7-710: Requirements for special installations or locations – Medical locations*

[11] Void

[12] IEC 60513:1994, *Fundamental aspects of safety standards for medical electrical equipment*

[13] IEC 60601-1-1:2000, *Medical electrical equipment – Part 1-1: General requirements for safety – Collateral standard: Safety requirements for medical electrical systems*

[14] IEC 60601-1-4:1996, *Medical electrical equipment – Part 1: General requirements for safety – 4. Collateral standard: Programmable electrical medical systems*
Amendment 1 (1999)[11)]

[15] IEC 60601-2-4, *Medical electrical equipment – Part 2-4: Particular requirements for the safety of cardiac defibrillators*

[16] IEC 60601-2-49:2001, *Medical electrical equipment – Part 2-49: Particular requirements for the safety of multifunction patient monitoring equipment*

[17] IEC 60695-1-10, *Fire hazard testing – Part 1-10: Guidance for assessing the fire hazard of electrotechnical products – General guidelines*

[18] IEC 60721 (all parts), *Classification of environmental conditions*

[19] IEC 60788:2004, *Medical electrical equipment – Glossary of defined terms*

[20] IEC 60990, *Methods of measurement of touch current and protective conductor current*

_____

11) There exists a consolidated edition 1.1 (2000) including IEC 60601-1-4 (1996) and its Amendment 1 (1999).

Copyright International Electrotechnical Commission
Provided by IHS Markit under license with IEC
No reproduction or networking permitted without license from IHS Not for Resale, 08/26/2020 19:12:41 MDT

[21] IEC 61000-4-11, *Electromagnetic compatibility (EMC) – Part 4-11: Testing and measurement techniques – Voltage dips, short interruptions and voltage variations immunity tests*

[22] IEC 61010-1:2010, *Safety requirements for electrical equipment for measurement, control, and laboratory use – Part 1: General requirements*

[23] IEC 61140:2001, *Protection against electric shock – Common aspects for installation and equipment*

[24] IEC 61258, *Guidelines for the development and use of medical electrical equipment educational materials*

[25] IEC 62079:2001, *Preparation of instructions – Structuring, content and preparation*

[26] IEC 80001-1:2010, *Application of risk management for IT-networks incorporating medical devices – Part 1: Roles, responsibilities and activities*

[27] ISO 407, *Small medical gas cylinders – Pin-index yoke-type valve connections*

[28] ISO 5805, *Mechanical vibration and shock – Human exposure – Vocabulary*

[29] ISO 8041, *Human response to vibration – Measuring instrumentation*

[30] ISO 13485, *Medical devices – Quality management systems – Requirements for regulatory purposes*

[31] ISO 14708-1, *Implants for surgery – Active implantable medical devices – General requirements for safety, marking and for information to be provided by the manufacturer*

[32] IEV-DB:2002, *International Electrotechnical Vocabulary*

[33] ISO/IEC Guide 51:1999, *Safety aspects – Guidelines for their inclusion in standards*

[34] ACGIH Threshold Limit Values and Biological Exposure Indices (2000 handbook) ISBN: 1-882417-36-4

[35] ASTM STP 1262, *Environmental Toxicology and Risk Assessment, 4th Volume*, Editor(s): T.W. La Point, F. T. Price, E.E. Little, Published 1996, ISBN:0-8031-1998-4

[36] ASTM STP 1267, *Flammability and Sensitivity of Materials in Oxygen-Enriched Atmospheres:7th Volume*, Editor(s): Janoff/Royals/Gunaji, Published 1996, ISBN:0-8031-2004-4

[37] ASTM STP 1395, *Flammability and Sensitivity of Materials in Oxygen-Enriched Atmospheres*, Ninth Volume, Editor(s): T.A. Steinberg; B.E. Newton; H.D. Beeson, Published 2000, ISBN:0-8031-2871-1

[38] EN 563, *Safety of machinery – Temperatures of touchable surfaces – Ergonomic data to establish temperature limit values for hot surfaces*

[39] ICRP Publication 60:1990 *Recommendations of the International Commission on Radiological Protection*, Annals of the ICRP Volume 21/1-3, International Commission on Radiological Protection, 1992

[40] MIL-HDBK-217:1995, *Reliability prediction of electronic equipment*

[41] NFPA 53:1999, *Recommended practice on materials, equipment and systems used in oxygen-enriched atmospheres*

[42] NFPA 99:2002, *Standard for Health Care Facilities*

Copyright International Electrotechnical Commission
Provided by IHS Markit under license with IEC
No reproduction or networking permitted without license from IHS Not for Resale, 08/26/2020 19:12:41 MDT

[43] UL 1439:1998, *Test for sharpness of edges on equipment*

[44] UL 2601-1:1997, *Medical Electrical Equipment, Part 1: General Requirements for Safety*

[45] DALZIEL, CF., LEE, WR., Re-evaluation of lethal electric currents. *IEEE Transactions on Industry and General Applications*, September/October 1968, Vol. 1 GA–4, No. 5

[46] DOLAN, AM., HORACEK, BM., RAUTAHARAJU, PM., *Medical Instrumentation* (abstract), January 12, 1953, 1978

[47] GREEN, HL., *Electrical Safety Symposium Report*. Department of Health and Social Security, United Kingdom, October 1975

[48] KEESEY, JC. and LETCHER, FS., Human thresholds of electric shock at power transmission frequencies. *Arch. Environ. Health*, October 1970, Vol. 21

[49] ROY, OZ., 60 Hz Ventricular fibrillation and rhythm thresholds and the non-pacing intracardiac catheter. *Medical and Biological Engineering*, March 1975

[50] RAFFERTY, E B., GREEN, HL., YACOUB, MH., Disturbances of heart rhythm produced by 50 Hz leakage currents in human subjects. *Cardiovascular Research*, March 1975, Vol. 9, No. 2, pp. 263-265

[51] SANDERS, MS. and McCORMICK, EJ., *Human Factors In Engineering and Design,"* 7th Ed., McGraw-Hill, Inc., ISBN 0-07-054901-X

[52] SCHWARTZ, SI., SHIRES, GT., SPENCER, FC., STORER, EH., *Principles of Surgery,* 7th Ed., McGraw-Hill, Inc., ISBN 0-07-054256-2

[53] STARMER, CF. and WHALEN, RE., Current density and electrically induced ventricular fibrillation. *Medical Instrumentation*, January-February 1973, Vol. 7, No. 1.

[54] WATSON, AB. and WRIGHT, JS., Electrical thresholds for ventricular fibrillation in man. *Medical Journal of Australia*, June 16, 1973

[55] IEC 60332-1-2, Tests on electric and optical fibre cables under fire conditions Part 1-2: Test for vertical flame propagation for a single insulated wire or cable – Procedure for 1 kW pre-mixed flame

[56] IEC 60332-2-2, Tests on electric and optical fibre cables under fire conditions Part 2-2: Test for vertical flame propagation for a single small insulated wire or cable – Procedure for diffusion flame

[57] IEC 60601-1-11, Medical electrical equipment – Part 1-11: General requirements for basic safety and essential performance – Collateral Standard: Requirements for medical electrical equipment and medical electrical systems used in the home healthcare environment

[58] IEC 60601-1-12, Medical electrical equipment – Part 1-12: General requirements for basic safety and essential performance – Collateral Standard: Requirements for medical electrical equipment and medical electrical systems used in the emergency medical services environment

[59] IEC 60601-2-22, Medical electrical equipment – Part 2-22: Particular requirements for basic safety and essential performance of surgical, cosmetic, therapeutic and diagnostic laser equipment

[60] IEC 60878, Graphical symbols for electrical equipment in medical practice

Copyright International Electrotechnical Commission
Provided by IHS Markit under license with IEC
No reproduction or networking permitted without license from IHS Not for Resale, 08/26/2020 19:12:41 MDT

[61] IEC 61010 (all parts), Safety requirements for electrical equipment for measurement, control, and laboratory use

[62] IEC 61558-1, Safety of power transformers, power supplies, reactors and similar products – Part 1: General requirements and tests

[63] IEC 61558-2-4, Safety of transformers, reactors, power supply units and similar products for supply voltages up to 1 100 V – Part 2-4: Particular requirements and tests for isolating transformers and power supply units incorporating isolating transformers

[64] IEC 61558-2-23, Safety of transformers, reactors, power supply units and combinations thereof – Part 2-23: Particular requirements and tests for transformers and power supply units for construction sites

[65] IEC 62353, Medical electrical equipment – Recurrent test and test after repair of medical electrical equipment

[66] IEC/TR 62354, General testing procedures for medical electrical equipment

[67] IEC 62471:2006, Photobiological safety of lamps and lamp systems

[68] ISO 7396-1, Medical gas pipeline systems – Part 1: Pipeline systems for compressed medical gases and vacuum

[69] ISO 14708 (all parts), Implants for surgery – Active implantable medical devices

[70] ISO 15001, Anaesthetic and respiratory equipment – Compatibility with oxygen

[71] ANSI/AAMI HE-75:2009, Human Factors Engineering – Design of Medical Devices

[72] UL 2556:2007, UL Standard for Safety Wire and Cable Test Methods

[73] IEC 60479-1:2018, *Effects of current on human beings and livestock – Part 1: General aspects*

[74] IEC 60601-1:1988, *Medical electrical equipment – Part 1: General requirements for safety*
Amendment 1:1991
Amendment 2:1995

[75] IEC 60601-2-57, *Medical electrical equipment – Part 2-57: Particular requirements for the basic safety and essential performance of non-laser light source equipment intended for therapeutic, diagnostic, monitoring and cosmetic/aesthetic use*

[76] IEC 62366-1:2015, *Medical devices – Part 1: Application of usability engineering to medical devices*

[77] IEC TR 62368-2:2019, *Audio/video, information and communication technology equipment – Part 2: Explanatory information related to IEC 62368-1:2018*

[78] ISO 2409, *Paints and varnishes – Cross-cut test*

[79] ISO 4624, *Paints and varnishes – Pull-off test for adhesion*

Copyright International Electrotechnical Commission
Provided by IHS Markit under license with IEC
No reproduction or networking permitted without license from IHS Not for Resale, 08/26/2020 19:12:41 MDT

[80] ISO 10524-1:2018, *Pressure regulators for use with medical gases – Part 1: Pressure regulators and pressure regulators with flow-metering devices*

[81] ISO 13732-1:2006, *Ergonomics of the thermal environment – Methods for the assessment of human responses to contact with surfaces – Part 1: Hot surfaces*

[82] UL 746C, *Standard for Polymeric Materials – Use in Electrical Equipment Evaluations*

--`,,```,,,,````-`-`,,`,,`,`,,`---

Copyright International Electrotechnical Commission
Provided by IHS Markit under license with IEC
No reproduction or networking permitted without license from IHS Not for Resale, 08/26/2020 19:12:41 MDT

INDEX OF ABBREVIATIONS AND ACRONYMS

Abbreviation	Term
a.c.	Alternating current
AEL	Accessible emission limit
AMSO	Auxiliary mains socket-outlet
AP	Anaesthetic-proof
APG	Anaesthetic-proof category G (gas)
CASE	Computer aided software engineering
CAT	Computer assisted tomography
CRT	Cathode ray tube
CTI	Comparative tracking index
d.c.	Direct current
DICOM	Digital imaging and communication in medicine
ELV	Extra-low voltage
EUT	Equipment under test
FDDI	Fibre distributed data interface
FEP	Fluorinated ethylene propylene
FMEA	Failure modes and effects analysis
HL7	Health Level 7
IBP	Invasive blood pressure catheter
ICRP	International commission for radiation protection
IEV	International Electrotechnical Vocabulary
IP	International protection in relation to the protection requirements of IEC 60529 or Internet protocol in relation to NETWORK/DATA COUPLING
IPS	Isolated power supply
IT	Information technology
KPaG	Kilopascal Gauge
LDAP	Light weight directory access protocol
LED	Light emitting diode
MAR	Minimum angle resolvable
MD	Measuring device, see 8.7.4.4
ME	MEDICAL ELECTRICAL, see 3.63 and 3.64
MOOP	MEANS OF OPERATOR PROTECTION, see 3.58
MOP	MEANS OF PROTECTION, see 3.60
MOPP	MEANS OF PATIENT PROTECTION, see 3.59
MPSO	Multiple portable socket-outlet
MSO	MULTIPLE SOCKET-OUTLET, see 3.67
OTS	Off the shelf
PEMS	PROGRAMMABLE ELECTRICAL MEDICAL SYSTEM, see 3.90
PESS	PROGRAMMABLE ELECTRONIC SUBSYSTEM, see 3.91
PTC	Positive temperature coefficient device
PTFE	Polytetrafluoroethylene

Copyright International Electrotechnical Commission
Provided by IHS Markit under license with IEC
No reproduction or networking permitted without license from IHS Not for Resale, 08/26/2020 19:12:41 MDT

Abbreviation	Term
PVC	Polyvinyl chloride
RFID	Radio-frequency identification
r.m.s.	Root mean square
SAR	Specific absorption rate
SELV	Safety extra-low voltage
SI	System international
SIP/SOP	SIGNAL INPUT/OUTPUT PART, see 3.115.
TCP	Transport connection protocol
TENS	Transcutaneous electronic nerve stimulator
TFE	Tetrafluoroethylene
UPS	Uninterruptible power supply
VDU	Video display unit
V-x	Flammability classification according to IEC 60695-11-10

--`,,```,,,,````-`-`,,`,,`,`,,`---

Copyright International Electrotechnical Commission
Provided by IHS Markit under license with IEC
No reproduction or networking permitted without license from IHS Not for Resale, 08/26/2020 19:12:41 MDT

INDEX

Abnormal condition, 38, 39
ACCESS COVER, 53, 54, 77, 79, 80, 133, 138
  Definition, 23
ACCESSIBLE PART, 219
ACCESSIBLE PART, 27, 75, 78, 83, 84, 98, 135, 220, 221, 228, 229, 239, 246, 247, 250
  Actuating mechanisms, 57
  Defibrillation protection, 261
  Definition, 23
  Determination of, 54, 76, 238, 247, 325
  Fuse-holder, 62
  Internal screens and internal wiring, 94, 265
  LEAKAGE CURRENTS, 77, 248
  MAXIMUM MAINS VOLTAGE on, 248
  MEANS OF PROTECTION, 80, 250
  Metal, 84, 110, 132, 263, 273
  Moving, 180
  of ENCLOSURES, 213
  TOUCH CURRENT, 249
  Voltage limits for, 179
ACCESSORY, 53, 59, 60, 90, 146, 156, 224, 241, 285, 298
  ACCOMPANYING DOCUMENTS definition, 23
  Biocompatibility, 175
  Cleaning, 73, 175
  Definition, 23
  Definition of HAND-HELD, 30
  Definition of PORTABLE, 35
  Disposal, 73
  List of, 73
  ME EQUIPMENT definition, 33
  Means of attachment, 154
  Method of sterilization, 63
  Minimum marking, 59
  MODEL OR TYPE REFERENCE definition, 33
  Multiple cleanings/disinfections, 175
  Operating instructions, 72
  Other power source, 61
  Pneumatic and hydraulic parts, 151
  Single use, 59
  Start-up PROCEDURE, 72
  Sterile, 63, 74
  Sterilization, 175
ACCOMPANYING DOCUMENT, 36, 53, 54, 59, 61, 63, 64, 69, 70, 75, 77, 94, 139, 145, 146, 147, 149, 150, 154, 156, 159, 173, 188, 189, 191, 203, 205, 209, 232, 233, 239, 243, 244, 245, 261, 272, 285, 330, 348
  COMPONENT WITH HIGH-INTEGRITY CHARACTERISITCS, 220
  Consult, 240, 332
  Defibrillation voltage and any recovery time, 87
  Definition, 23
  Inspection, 50, 70, 76, 149, 156, 159, 193, 198
  Instructions for use, 69, 331
  ME SYSTEM, 202, 320
  Mechanism for isolating the SUPPLY MAINS, 133
  MODEL OR TYPE REFERENCE, 224
  Recovery time, 90
  SAFE WORKING LOAD, 157
  Surface temperature, 211
  Technical description, 69, 331
  Working conditions, 52
Active implantable medical device, 18, 33
AIR CLEARANCE, 32, 76, 79, 81, 83, 84, 85, 87, 116, 118, 119, 120, 121, 123, 124, 125, 126, 127, 128, 129, 134, 136, 137, 138, 148, 156, 157, 165, 189, 204, 207, 223, 227, 228, 236, 248, 251, 276, 277, 279, 281, 282, 287, 297, 305, 326, 349
  Complying with IEC 60950-1, 117, 251
  DEFIBRILLATION-PROOF APPLIED PARTS, 121, 281
  Definition, 23
  High altitude, 118
  Interpolation, 118, 281
  MEANS OF OPERATOR PROTECTION, 82
  MEANS OF PATIENT PROTECTION, 81
  Short circuit of, 76
  Transformer, 201
  Values, 117
AIR KERMA
  Definition, 41
ALARM CONDITION, 42, 233
  Definition, 41
ALARM SIGNAL, 42, 47, 221, 233
  Definition, 42
ALARM SYSTEM, 42, 176, 233
  Definition, 42
Ambient humidity, 52, 63, 193, 245, 381
Ambient illuminance, 58
Ambient pressure, 34, 52, 226, 245
Ambient temperature, 27, 52, 116, 163, 165, 199, 245, 298, 318, 350, 354, 355
APPLIANCE COUPLER, 24, 28, 31, 72, 134, 135, 283
  Definition, 23
APPLIANCE INLET, 23, 31, 64, 91, 92, 108, 128, 138, 146
  Definition, 24
APPLIED PART, 23, 28, 29, 33, 34, 38, 40, 47, 57, 62, 75, 77, 83, 84, 86, 87, 89, 90, 95, 97, 98, 108, 110, 111, 163, 164, 175, 179, 205, 213, 216, 217, 218, 234, 246, 248, 262, 269, 278, 307, 321, 369, 378, 379
  Classification, 57, 77
  Cold, 163
  Definition, 24
  Determination of, 54, 325
  DIRECT CARDIAC APPLICATION, 77, 220
  DIRECT CARDIAC APPLICATION, 28
  HAND-HELD, 315
  High altitude, 299
  Intended to supply heat, 163
  Marking of, 61
  Maximum surface temperature, 299
  Maximum temperature, 178
  MEANS OF PROTECTION, 80
  Moving, 180

--`,,```,,,,````-`-`,,`,,`,`,,`---

Copyright International Electrotechnical Commission
Provided by IHS Markit under license with IEC
No reproduction or networking permitted without license from IHS
Not for Resale, 08/26/2020 19:12:41 MDT

Multiple, 84, 258
Not intended to supply heat, 163, 299
Specified in the instructions for use, 72
Temperature, 163
BASIC INSULATION, 27, 28, 39, 112, 202, 207, 219, 220, 221, 223, 228, 235, 248, 250, 251, 263, 274, 276, 278, 322, 381, 382, 383
Definition, 24
MEANS OF PROTECTION, 247
BASIC SAFETY, 18, 23, 28, 46, 51, 76, 90, 148, 156, 157, 173, 174, 175, 184, 186, 187, 188, 189, 209, 211, 212, 219, 220, 224, 228, 230, 235, 236, 237, 238, 239, 241, 244, 246, 250, 261, 287, 296, 297, 298, 308, 318, 320, 321, 323
Defibrillation protection, 87
Definition, 27
Flow rate, 63
Loss of, 206
Testing, 74
Batch or lot identifier
ACCESSORY, 60
ME EQUIPMENT, 59
Biocompatibility, 175, 229, 315, 325
BODY-WORN, 87
Definition, 42
Equipment, 40
CATEGORY AP, 173, 303, 323, 324, 328, 329, 330, 346, 347, 348, 349, 350
Definition, 27
Symbol, 336
CATEGORY APG, 173, 303, 323, 324, 328, 329, 330, 347, 348, 349, 355
Definition, 27
Symbol, 336
CLASS I, 36, 57, 71, 109, 138, 204, 207, 235, 244, 248, 263, 269, 271, 283, 322
Definition, 27
CLASS II, 27, 57, 60, 94, 109, 138, 221, 265, 271, 330, 334, 373
Definition, 27
Class III, 239
CLEARLY LEGIBLE, 58, 62, 64, 146, 147, 239
Definition, 27
COLD CONDITION, 181, 327
Definition, 27
Comparative tracking index, 119
COMPONENT WITH HIGH-INTEGRITY CHARACTERISTICS, 48, 49, 76, 179, 186, 198, 199, 220, 236, 312
Definition, 27
CONTINUOUS OPERATION, 57, 62, 164, 183, 205, 220, 239, 308, 355
Definition, 27
DUTY CYCLE, 220
Non-, 57, 62, 164, 182, 183, 184, 205, 220, 239, 307, 308
CREEPAGE DISTANCE, 32, 76, 79, 81, 83, 84, 85, 87, 112, 116, 118, 122, 126, 127, 128, 129, 134, 136, 137, 138, 148, 156, 157, 165, 189, 204, 207, 223, 227, 236, 248, 251, 259, 276, 277, 279, 281, 282, 287, 297, 305, 317, 326, 349
Complying with IEC 60950-1, 117, 251
DEFIBRILLATION-PROOF APPLIED PARTS, 121, 281
Definition, 28
High altitude, 118
Interpolation, 118, 281
MEANS OF OPERATOR PROTECTION, 82, 121
MEANS OF PATIENT PROTECTION, 81
Moulded transformer, 202
Short circuit of, 76
SINGLE FAULT CONDITION, 237
Transformer, 201
Values, 117
WORKING VOLTAGE above 1 000 V, 279
Date of manufacture
ACCESSORY, 60
ME EQUIPMENT, 59
DEFIBRILLATION-PROOF APPLIED PART, 87, 220, 241, 261, 263
Classification, 57, 84, 86
Common-mode test, 87
CREEPAGE DISTANCES and AIR CLEARANCES, 121
Definition, 28
Differential-mode test, 89
Energy reduction test, 90
Marking of, 61
WORKING VOLTAGE, 86, 261
Design documentation
Evaluation of, 179
Inspection, 116, 193
DETACHABLE POWER SUPPLY CORD, 92, 108, 146, 220, 259, 264, 349
Definition, 28
Non-, 75, 92, 137, 283
Diagnostic or therapeutic radiation, 177
DIRECT CARDIAC APPLICATION, 40, 77, 220, 228, 229, 249, 265, 320
Definition, 28
DOUBLE INSULATION, 27, 48, 76, 86, 220, 235, 247, 251, 253, 276, 278, 284, 381
Definition, 28
MEANS OF PROTECTION, 28, 247
Short circuiting, 94, 265
WORKING VOLTAGE, 261
DUTY CYCLE, 68, 164, 183, 220, 298
Definition, 28
Marking of, 62
EARTH LEAKAGE CURRENT, 31, 94, 97, 109, 225, 266, 373
Definition, 28
Measurement, 98, 109, 272
MULTIPLE SOCKET-OUTLET, 321
Total, 205
Value, 94, 95
Value for a MULTIPLE SOCKET-OUTLET, 205
Electrical equipment, 71, 75, 76, 77, 107, 211, 238, 319
ACCESS COVER definition, 23
ACCESSIBLE PART definition, 23
APPLIANCE COUPLER definition, 23
APPLIANCE INLET definition, 24
CLASS II definition, 27
COLD CONDITION definition, 27
DETACHABLE POWER SUPPLY CORD definition, 28

Copyright International Electrotechnical Commission
Provided by IHS Markit under license with IEC
No reproduction or networking permitted without license from IHS
Not for Resale, 08/26/2020 19:12:41 MDT

INTERNAL ELECTRICAL POWER SOURCE definition, 30
INTERNALLY POWERED definition, 31
MAINS CONNECTOR definition, 31
MAINS PLUG definition, 31
MAINS TRANSIENT VOLTAGE definition, 31
ME EQUIPMENT definition, 33
PEAK WORKING VOLTAGE definition, 35
POTENTIAL EQUALIZATION CONDUCTOR definition, 35
POWER SUPPLY CORD definition, 35
SELF-RESETTING THERMAL CUT-OUT definition, 38
SIGNAL INPUT/OUTPUT PART definition, 38
TERMINAL DEVICE definition, 39
THERMAL CUT-OUT definition, 39
WORKING VOLTAGE definition, 41
ENCLOSURE, 31, 40, 79, 80, 84, 86, 87, 95, 107, 109, 110, 112, 113, 129, 134, 140, 170, 213, 220, 228, 246, 247, 249, 261, 267, 276, 278, 285, 289, 321, 324, 346, 347, 349, 350, 354, 355, 369
ACCESS COVER, 23, 238
ACCESSIBLE PART, 213
Ball-pressure test, 116
Definition, 28
Deformation of, 178
Fire, 165, 171, 179, 287, 303, 306, 328
Greater than IPX0, 53
HAND HELD switches and footswitches, 282
HIGH VOLTAGE parts, 242
Impact, 190, 315
Impairment of cooling, 180
IP Classification, 57, 61, 174, 198, 212, 238, 304
IPX0, 53
Main, 109, 264
ME SYSTEM, 204, 319
Minimum marking, 59
Moulded, 192, 193
MULTIPLE SOCKET-OUTLET, 207
Non-conductive, 107
Opening in, 78, 79, 349
Rigidity, 190, 315
Separate, 76
TOUCH CURRENT, 40, 272
Equipment, 60, 61, 72, 73, 202, 203, 204, 206, 207, 208, 213, 223, 224, 225, 228, 236, 239, 278, 283, 285, 286, 296, 314, 317, 319, 320, 321, 322, 365, 369
ACCESSORY definition, 23
ACCOMPANYING DOCUMENTS definition, 23
BODY-WORN, 40
Class III, 239
GUARD definition, 29
HAND-HELD definition, 30
IT-NETWORK, 188, 189
MAINS SUPPLY TRANSFORMER definition, 31
ME SYSTEM definition, 33
MOBILE, 40, 288
MOBILE definition, 33
MODEL OR TYPE REFERENCE definition, 33
NETWORK/DATA COUPLING definition, 33
PERMANENTLY INSTALLED, 340
Polyphase, 260
PORTABLE, 40
PROTECTIVE EARTH TERMINAL definition, 36
SAFE WORKING LOAD definition, 38
Separate power supply, 53
SERVICE PERSONNEL definition, 38
STATIONARY definition, 39
TRANSPORTABLE definition, 35, 40
TRAPPING ZONE definition, 40
TYPE TEST definition, 41
ESSENTIAL PERFORMANCE, 220
ESSENTIAL PERFORMANCE, 18, 23, 28, 46, 47, 51, 90, 148, 156, 157, 174, 184, 186, 187, 188, 194, 209, 211, 212, 219, 220, 224, 230, 231, 236, 237, 241, 261, 287, 288, 296, 308, 311, 323, 325
d.c. SUPPLY MAINS, 76
Defibrillation protection, 87
Definition, 28
Disclosure of, 74
Flow rate, 63
Information about, 74
Testing, 74
VERIFICATION, 187, 314
EXPECTED SERVICE LIFE, 27, 38, 47, 48, 49, 57, 58, 69, 76, 92, 116, 154, 160, 175, 193, 233, 234, 235, 236, 263, 275, 293
Definition, 28
Disposal, 73
Faults, 237
Simultaneous independent, 51, 238
Fire, 64, 139, 165, 166, 169, 170, 171, 173, 195, 209, 250, 283, 292, 301, 302, 303, 306, 307, 319, 328
FIXED
APPLIANCE INLET, 24
Connections, 263
Definition, 29
GUARD, 140
Installations, 225
Mains socket-outlets, 225
ME EQUIPMENT, 58, 109, 145, 146, 147, 171, 190, 315
POWER SUPPLY CORD, 35
PROTECTIVE EARTH CONDUCTOR, 91
Supply conductors, 91
SUPPLY MAINS, 29
Terminals, 138
Wiring, 138
FLAMMABLE ANAESTHETIC MIXTURE WITH AIR, 27, 303, 347, 354
Definition, 29
FLAMMABLE ANAESTHETIC MIXTURE WITH OXYGEN OR NITROUS OXIDE, 27, 347, 348, 349, 355, 359
Definition, 29
Flammable anaesthetic mixtures, 210, 323, 346
F-TYPE APPLIED PART, 35, 40, 84, 86, 110, 214, 215, 258, 259, 268, 278
Classification, 29
Definition, 29
F-TYPE ISOLATED (FLOATING) APPLIED PART. See F-TYPE APPLIED PART
Function, 23, 24, 27, 58, 63, 65, 69, 70, 71, 72, 74, 84, 93, 111, 113, 139, 159, 169, 175, 179, 187, 193, 194, 196, 206, 209, 214, 216, 217, 218, 220, 226, 236, 248, 258, 261, 263,

Copyright International Electrotechnical Commission
Provided by IHS Markit under license with IEC
No reproduction or networking permitted without license from IHS
Not for Resale, 08/26/2020 19:12:41 MDT

268, 270, 273, 274, 286, 311, 313, 314, 315, 329, 330, 331, 361, 365, 367
FUNCTIONAL CONNECTION, 33, 204, 221
Definition, 29
FUNCTIONAL EARTH CONDUCTOR, 27, 68, 265, 271
Definition, 29
LEAKAGE CURRENT
Value, 95
FUNCTIONAL EARTH TERMINAL, 27, 29, 90, 94, 107, 221
Definition, 29
Marking of, 63, 64
Functional test
ESSENTIAL PERFORMANCE, 47
Speed of movement, 143, 158
Strength of PATIENT or OPERATOR support or suspension systems, 156
Fuseholder, 54, 77, 239
GUARD, 140, 285
ACCESS COVER, 23
Definition, 29
FIXED, 140
Hot or cold accessible surfaces, 165
Movable, 142
TRAPPING ZONE, 140
HAND-HELD, 42
ACCESSORY, 191
APPLIED PART, 315
Control device, 132, 197
Definition, 30
ME EQUIPMENT, 50, 145, 164, 181, 184, 190, 191, 315
Part, 132, 145, 190, 191
Switches and footswitches, 282
HARM, 233
HARM, 30, 37, 62, 142, 144, 148, 156, 157, 189, 220, 221, 222, 231, 232, 235, 262, 284, 287, 289, 291, 292, 296, 299, 307
Definition, 30
HAZARD, 18, 27, 30, 32, 34, 37, 38, 40, 44, 45, 46, 62, 64, 74, 75, 139, 143, 144, 145, 149, 154, 186, 194, 195, 202, 205, 209, 210, 213, 219, 222, 223, 226, 230, 231, 232, 235, 236, 238, 240, 241, 242, 245, 246, 259, 260, 266, 269, 281, 282, 283, 284, 285, 286,291, 292, 293, 302, 304, 305, 311, 312, 315, 316, 317, 319, 320, 321, 325, 329, 331, 349, 365, 366, 369
Definition, 30
Excessive temperatures, 161, 298
Expelled parts, 139, 150, 289, 327
Impairment of cooling, 180
Instability, 145, 287, 326
Moving parts, 326
Rough surfaces, corners and edges, 145, 287, 326
Support systems, 154, 292, 327
Temperature of APPLIED PARTS, 299
Unwanted and excessive radiation, 159, 297
HAZARDOUS SITUATION, 41, 44, 45, 46, 48, 51, 75, 76, 98, 139, 170, 177, 178, 179, 195, 196, 222, 231, 232, 259, 283, 303, 305, 309, 321, 322, 327, 366
Adjustment of controls, 196
Battery replacement, 195
Conditions or faults, 45
Damage during assembly, 133
Damage to insulation, 132
Definition, 30
Detachment of conductors and connectors, 76, 132
Exhaustion of a battery, 316
Failure of any one component at a time, 177
Failure of components, 48
Heaters, 196
Incorrect connection, 206
Ingress of water and particulate matter, 175, 304
Interruption of SUPPLY MAINS, 175
Interruption of the power supply, 206, 304
Limitation of movement, 197
Mechanism for isolating the SUPPLY MAINS, 133
Overflow, 174
Overheating of transformers, 199, 200
Poor contact, 132
Prolonged operation, 196
Short circuiting of a battery, 195
Short circuiting of CREEPAGE DISTANCES or AIR CLEARANCES, 126
Speed of movement, 143
Spillage, 174
THERMAL CUT-OUTS and OVER-CURRENT RELEASES, 193, 194
THERMOSTAT, 194
Transformer failure, 200
Health care professional, 225
HIGH VOLTAGE, 62
Defibrillation protection, 261
Definition, 30
Part, 242, 346
Part, Marking of, 63, 332
Humidity preconditioning, 53, 94, 113, 127, 200, 238, 276, 326
HYDRAULIC TEST PRESSURE, 152, 153
Definition, 30
Installation instruction
Transient current, 204
Instructions for use, 34, 51, 52, 53, 54, 57, 62, 67, 69, 70, 71, 74, 77, 79, 90, 93, 108, 111, 113, 139, 146, 147, 157, 163, 174, 175, 204, 210, 225, 235, 239, 243, 244, 261, 319, 331, 348
Inspection, 74, 78, 164
Unique version identifier, 74
INSULATION CO-ORDINATION
Definition, 30
IEC 60950-1, 82, 83, 112, 117, 228, 229
INTENDED USE, 23, 35, 42, 70, 140, 151, 159, 193, 219, 225, 231, 245, 263, 281, 285, 289, 303, 316, 366, 367
Definition, 30
ESSENTIAL PERFORMANCE, 220
EXPECTED SERVICE LIFE, 233
Identification of ESSENTIAL PERFORMANCE, 46
NORMAL USE definition, 34
INTERNAL ELECTRICAL POWER SOURCE, 31, 38, 50, 52, 71, 195, 196, 244, 317
Definition, 30
INTERNALLY POWERED, 57, 85, 109, 120, 260
Definition, 31

Copyright International Electrotechnical Commission
Provided by IHS Markit under license with IEC
No reproduction or networking permitted without license from IHS
Not for Resale, 08/26/2020 19:12:41 MDT

IP Classification, 57, 61, 198, 207
Isolated power supply (IPS), 204
IT-NETWORK, 188, 189, 314, 365, 366
Configuration, 189
Connection of additional items, 189
Definition, 42
Disconnecting items, 189
Update of equipment, 189
Upgrade of equipment, 189
Lampholder, 63, 77, 165
Layperson, 37, 225
LEAKAGE CURRENT, 31, 40, 77, 78, 84, 94, 95, 107, 108, 179, 204, 213, 226, 231, 237, 244, 246, 248, 250, 258, 259, 260, 265, 267, 268, 269, 271, 272, 283, 321, 322, 326, 327, 369
Definition, 31
Measurement, 76, 84, 93, 98, 108, 174, 175, 205, 238, 248, 265, 271, 272
SINGLE FAULT CONDITION, 237
TYPE B APPLIED PART, 259
Value, 95
LEDs, 298
MAINS CONNECTION
Total protective earth path, 207
MAINS CONNECTOR, 23, 31, 135, 136, 259, 283
Definition, 31
MAINS PART, 28, 52, 53, 94, 114, 116, 117, 119, 120, 121, 123, 124, 126, 132, 133, 138, 139, 222, 228, 237, 246, 274, 277, 278, 281, 284, 327
Definition, 31
Overvoltage category, 120
Separation from SECONDARY CIRCUIT, 38
MAINS PLUG, 72
MAINS PLUG, 75, 92, 94, 134, 206, 207, 222, 250, 322, 323
Definition, 31
MAINS SUPPLY TRANSFORMER, 198, 207, 317, 318, 327
Definition, 31
MAINS TERMINAL DEVICE, 137, 138, 207, 283, 284, 330
Definition, 31
MAINS TRANSIENT VOLTAGE, 119, 120, 123, 134
Definition, 31
MAINS VOLTAGE, 85, 98, 107, 123, 124, 214, 222, 268, 269, 271, 272, 273, 278, 351, 356
Definition, 31
NOMINAL, 33, 119
RATED, 160
RATED, 94, 119, 160, 205, 260
MANUFACTURER
ESSENTIAL PERFORMANCE, 232, 233
MANUFACTURER, 30, 33, 34, 36, 38, 45, 46, 57, 72, 73, 74, 75, 84, 92, 109, 118, 129, 136, 138, 149, 151, 152, 153, 154, 156, 160, 161, 163, 170, 173, 175, 176, 177, 185, 186, 188, 189, 193, 194, 196, 211, 212, 216, 218, 220, 230, 231, 235, 237, 241, 242, 243, 244, 245, 251, 258, 260, 263, 272, 284, 288, 289, 291, 292, 294, 298, 303, 304, 306, 309, 310, 311, 314, 315, 316, 323, 365, 370
Acceptance criteria, 45, 46, 232
Alternative measure or test method, 47
Alternative RISK CONTROL measures, 289, 294
Calculations or test results, 160
Calculations or test results, 46
calculations, analyses or test results, 232
Definition, 32
Detachable components, 59
Equivalent safety, 234
ESSENTIAL PERFORMANCE, 28, 220
Expected service life, 28, 47, 233, 234
Flammable anaesthetic mixtures, 323
Identification of ESSENTIAL PERFORMANCE, 46, 47
INTENDED USE, 70
Marking of name or trademark and contact information, 59
Marking of name or trade-name, 69
Marking of name or trade-name and address, 70
Marking of name or trade-name and contact information, 59
ME SYSTEM, 202, 203, 204, 224, 230, 319, 320, 321
PEMS, 188, 366, 367
Qualification of SERVICE PERSONNEL, 75
Reasonably foreseeable misuse, 230
RISK ASSESSMENT, 294
Single use, 73
Specification of overvoltage category, 51
System integration, 365
Marking, 232
Overflow, 174
Material group classification, 118
MAXIMUM MAINS VOLTAGE, 75, 84, 85, 95, 98, 110, 204, 223, 248, 260, 268, 273, 377
Definition, 32
MAXIMUM PERMISSIBLE WORKING PRESSURE, 152, 153, 223, 291, 292
Definition, 32
ME EQUIPMENT
FIXED, 145
PERMANENTLY INSTALLED, 284
See MEDICAL ELECTRICAL EQUIPMENT, 33
ME SYSTEM
Large transient currents, 204
See MEDICAL ELECTRICAL SYSTEM, 33
MEANS OF OPERATOR PROTECTION, 82, 117, 121, 128, 195, 198, 199, 204, 223, 251, 280, 317, 318, 390
Additional AIR CLEARNACE, 124
Capacitors, 83
Definition, 32
IEC 60950-1, 83, 91, 112, 117, 118
Minimum AIR CLEARANCE, 123, 125
Minimum CREEPAGE DISTANCE, 121, 126
PROTECTIVE EARTH CONNECTION, 82
Solid insulation forming, 82
Test voltage for, 115
Test voltage for solid insulation, 114
MEANS OF OPERTOR PROTECTION
Coatings, etc. complying with IEC 60950-1, 80
MEANS OF PATIENT PROTECTION, 91, 118, 128, 170, 201, 214, 223, 251, 318, 349, 355, 390
Capacitors, 82
Coatings, etc. complying with IEC 60950-1, 80
Definition, 32

Copyright International Electrotechnical Commission
Provided by IHS Markit under license with IEC
No reproduction or networking permitted without license from IHS
Not for Resale, 08/26/2020 19:12:41 MDT

F-TYPE APPLIED PART, 84, 258
PATIENT CONNECTION, 84
PROTECTIVE EARTH CONNECTION, 82
Solid insulation forming, 81
Spacing, 122, 279
Test voltage for solid insulation, 114
TYPE B APPLIED PART, 84
MEANS OF PROTECTION, 24, 28, 31, 32, 80, 117, 135, 138, 156, 157, 233, 381, 382, 383, 390
AIR CLEARANCE, 126
Coatings, etc. not considered as, 80
Components and wiring, 80
Components used as, 48
CREEPAGE DISTANCE or AIR CLEARANCE not considered as, 81
CREEPAGE DISTANCE or AIR CLEARANCE, 81, 128, 137
Definition, 32
DOUBLE INSULATION, 86
Insulating characteristics and mechanical strength, 116
Insulating material in which heating conductors are embedded, 116
Internal screens and internal wiring, 94, 265
Pollution degree 4, 119
REINFORCED INSULATION, 37, 111, 112
Resistors bridging, 235
SECONDARY CIRCUIT, 38
Separation from MAINS PART, 132
Sheath of a flexible cord, 133
Short circuit of, 76, 137, 138, 165
Short circuit of CREEPAGE DISTANCE or AIR CLEARANCE, 76
SUPPLEMENTARY INSULATION, 39, 112
Test voltage for, 200, 276
Test voltage for solid insulation, 114
Transformer, 201
Transformers forming, 201
Wetting of, 173
WORKING VOLTAGE for, 85
RISK CONTROL, 289
RISK CONTROL, 296
MECHANICAL HAZARD, 139, 140, 142, 179, 181, 205, 210, 284, 285, 322
Definition, 32
Sharp edges, 145
MECHANICAL PROTECTIVE DEVICE, 48, 155, 157, 158, 159, 296, 329
Definition, 32
When not required, 159
Medical device, 45, 211, 308, 310, 364
MEDICAL ELECTRICAL EQUIPMENT, 198
a.c SUPPLY MAINS, 52
Accessibility of connections, 138
Acoustic energy and vibration, 150
Adapting, 32
Applicability of requirements, 18
Arrangement of controls and indicators, 189
Automatically or remotely controlled, 180
Battery, 71, 195
Battery replacement, 195
Biocompatibility, 175
CATEGORY AP, 346, 347, 348, 349, 350
CATEGORY APG, 347, 348, 349, 355
CLASS I, 71, 109, 138
CLASS II, 60, 94, 109, 138
Classification, 57
Cleaning, 73, 175
Compatibility with substances, 175
Component, 45, 48, 173
COMPONENT WITH HIGH-INTEGRITY CHARACTERISTICS, 27, 49
Condition for application, 44
Conductors and connectors, 132
Connection to SUPPLY MAINS, 75
Connectors, 193
CONTINUOUS OPERATION, 57, 62, 164
Contraindication, 70
Controls, 196
Cooling provisions, 62
d.c., 85
d.c. SUPPLY MAINS, 53, 76
Definition, 33
Description, 71, 74
Detachable components, 59
Diagnostic or therapeutic radiation, 177
Disabling of controls, 183
Disposal, 73
DUTY CYCLE, 28, 183
Educational materials, 70
Emergency stop, 144
Emitting radiation, 73
Equivalent safety, 47
Excessive radiation, 177
EXPECTED SERVICE LIFE, 47, 48, 57, 58, 76, 92, 116, 154, 160, 193
Expelled parts, 150
FIXED, 58, 109, 146, 147, 171
FIXED or HAND-HELD, 145
Fixing of components, 132
Fluid reservoir, 173
Foot-operated control device, 197, 198
Function, 24, 71, 74
Guiding rollers, 133
Hand loaded, 184
HAND-HELD, 50, 164, 181, 184, 190, 191
HAND-HELD control device, 197
Heating elements, 164, 182
Identification, 59, 69
Identification of ESSENTIAL PERFORMANCE, 46
In vitro diagnostic equipment, 18
Indicator lights, 196
Input supply voltage, 86
Inspection, 80, 198
Instability, 145
Installation, 72
INTENDED USE, 70, 140, 151, 193, 231
INTERNALLY POWERED, 57, 85, 109, 120
Interruption and short circuiting of motor capacitors, 180
Interruption of SUPPLY MAINS, 175
IP Classification, 174, 198
Isolation from SUPPLY MAINS, 74, 133, 134
Large, 193
Load-reducing device, 184
Mains operated, 71
Manual MOBILE, 148
Manually switched on, 184
MECHANICAL PROTECTIVE DEVICE, 158
MEDICAL ELECTRICAL SYSTEM, 33
Method of sterilization, 63

Copyright International Electrotechnical Commission
Provided by IHS Markit under license with IEC
No reproduction or networking permitted without license from IHS
Not for Resale, 08/26/2020 19:12:41 MDT

MOBILE, 63, 147, 148, 149, 174, 192, 198, 242, 287, 288
MOBILE Part, 192
MOBILE, power-driven, 148
Modification, 74
Motor, 183
Motor operated, 164, 181
Motor-driven MOBILE, 148
Moving parts, 139, 142, 145
Multiple cleanings/disinfections, 175
Multiple PATIENT CONNECTION, 111
MULTIPLE SOCKET-OUTLET, 61, 71, 134
Non-, 49, 202, 203, 204, 206, 322
Non-SI Units, 66
Oil-filled, 74, 198
Operating instructions, 72
Overcharging, 195
Overtravel, 143
Overvoltage category, 119
OXYGEN RICH ENVIRONMENT, 57
Part, 9, 27, 32, 38, 53, 54, 57, 58, 59, 61, 63, 65, 72, 75, 76, 79, 91, 93, 132, 142, 143, 145, 146, 147, 149, 154, 155, 156, 161, 162, 164, 173, 189, 198, 347, 348, 350, 354, 355, 356, 359
Part biocompatibility, 175
Part cleaning, 73, 175
Part sterilization, 175
Part, HAND-HELD, 190, 191
Part, heating, 183
Part, multiple cleanings/disinfections, 175
Parts that contact the PATIENT, 47
PATIENT ENVIRONMENT, 34
PERMANENTLY INSTALLED, 59, 60, 64, 75, 76, 90, 92, 95, 108, 133, 137, 138
PERMANENTLY INSTALLED, 151
Physiological effects, 62
Physiological function, 18
Platen glass, 191
Pneumatic and hydraulic parts, 151
Polyphase, 76, 85, 184
PORTABLE, 149, 191, 192, 198
PORTABLE part, 191
Power input, 51
Pressure control device, 153
Pressure relief device, 153
PROTECTIVE EARTH CONNECTION, 68
Protective measure, 142
RATED altitude, 118
RATED voltage, 52
Ready for NORMAL USE, 196
Rechargeable battery, 73
Reciprocal interference, 71
Release of PATIENT, 145
RESPONSIBLE ORGANIZATION, 37
RISK
of fire, 166
RISK MANAGEMENT PROCESS, 44
Rough surfaces, sharp corners and edges, 145
Routine maintenance, 73
Separate power supply, 53, 60, 71, 73, 76, 204
Shutdown PROCEDURE, 72
SI Units, 65
SINGLE FAULT CONDITION, 48
SINGLE FAULT CONDITION definition, 38
SINGLE FAULT SAFE, 48
Single use, 59
Source of power, 50
Spark source, 166
Spillage, 174
Stand-by or a warm-up state, 196
Start-up PROCEDURE, 72
STATIONARY, 136, 171
Sterile, 63, 74
Sterilization, 175
SUPPLY MAINS, 50, 51
Surface, 162
Surface coating, 93
Thermostatically controlled, 182
Timer, 184
Transformer, 198, 200, 201
TRANSPORTABLE, 58, 171, 174, 304
Unpacking, 63
MEDICAL ELECTRICAL SYSTEM, 38, 39, 72, 73, 77, 93, 170, 173, 202, 203, 204, 205, 206, 207, 208
Adapting, 32
Applicability or requirements, 18
Biocompatibility, 175
Cleaning, 175
Component, 45
Components, 49
Condition for application, 44
Creation of, 71
Definition, 33
Equivalent safety, 47
EXPECTED SERVICE LIFE, 47
Function, 24
Identification of ESSENTIAL PERFORMANCE, 46
INTENDED USE, 140, 231
IP Classification, 174
Multiple cleanings/disinfections, 175
OXYGEN RICH ENVIRONMENT, 57
Part, 205
Parts that contact the PATIENT, 47
PATIENT ENVIRONMENT, 34
Physiological function, 18
Power input, 51
RESPONSIBLE ORGANIZATION, 37
RISK MANAGEMENT PROCESS, 44
RISK of fire, 166
Spillage, 174
Sterilization, 175
Supplied from a UPS or IPS, 204
SUPPLY MAINS, 50, 51
Total PATIENT LEAKAGE CURRENT, 205
Total protective earth path, 207
TOUCH CURRENT, 204
Medical gas pipeline system, 18
MOBILE, 148, 288, 331
Definition, 33
EQUIPMENT, 40
ME EQUIPMENT, 63, 147, 148, 149, 174, 190, 192, 198, 242, 287, 288, 315
ME EQUIPMENT parts, 192
MODEL OR TYPE REFERENCE, 59, 60, 69, 70, 224, 240, 241
Definition, 33
Detachable components, 59

Copyright International Electrotechnical Commission
Provided by IHS Markit under license with IEC
No reproduction or networking permitted without license from IHS
Not for Resale, 08/26/2020 19:12:41 MDT

MOOP
See MEANS OF OPERATOR PROTECTION, 32
MOP
See MEANS OF PROTECTION, 32
MOPP
See MEANS OF PATIENT PROTECTION, 32
MSO
See MULTIPLE SOCKET-OUTLET, 33
MULTIPLE SOCKET-OUTLET, 33, 61, 71, 134, 203, 205, 206, 207, 224, 225, 271, 283, 320, 321, 322, 329, 369, 373, 390
Definition, 33
NETWORK/DATA COUPLING, 72, 186, 187, 225, 314, 366, 367
Definition, 33
NOMINAL
Capacitance, 82, 83
Conductor diameter, 382
Cross-sectional area of conductors, 135, 137
Definition, 33
Frequency, 51, 60
MAINS VOLTAGE, 33, 51, 119, 120, 123, 124, 125
Supply voltage, 60
NORMAL CONDITION, 27, 34, 48, 64, 75, 76, 78, 81, 83, 84, 86, 94, 95, 97, 99, 111, 133, 143, 150, 161, 163, 166, 169, 174, 175, 178, 179, 183, 202, 204, 205, 209, 225, 226, 246, 247, 248, 250, 265, 266, 267, 268, 269, 273, 278, 291, 302, 304, 305, 307, 321, 347, 350, 354,355, 356, 378
Definition, 34
Identification of ESSENTIAL PERFORMANCE, 46
NORMAL USE, 24, 27, 33, 34, 38, 39, 40, 41, 44, 52, 54, 58, 62, 64, 65, 71, 73, 77, 78, 79, 80, 86, 93, 110, 111, 112, 113, 133, 135, 140, 143, 145, 146, 147, 148, 149, 150, 151, 153, 156, 157, 160, 161, 164, 170, 173, 174, 175, 184, 191, 192, 193, 196, 197, 198, 199, 200, 205, 206, 209, 214, 216, 217, 218, 222, 231, 235, 236, 261, 285, 287, 288, 292, 298, 301, 302, 304, 306, 315, 316, 317, 320, 323, 324, 349, 350, 354, 355, 356
Definition, 34
INTENDED USE definition, 30
OBJECTIVE EVIDENCE, 41, 45, 232, 320
Definition, 34
Operating temperature, 64, 94, 98, 113, 161, 162, 205, 276, 301, 326, 350, 354, 355
OPERATOR, 23, 34, 40, 41, 58, 62, 67, 70, 71, 72, 73, 74, 77, 93, 142, 145, 156, 158, 169, 177, 181, 188, 196, 202, 204, 209, 210, 211, 213, 216, 220, 221, 223, 224, 225, 233, 234, 235, 237, 239, 240, 241, 243, 244, 250, 251, 262, 263, 266, 276, 285, 286, 287, 289, 305, 308, 316, 317, 320, 321, 331, 367, 369
Contact with, 110, 203, 246, 247, 249, 261, 299
Contact with PATIENT, 77
Definition, 34
Emergency stop, 144
Expected position of, 71, 150, 297
Exposure to hazardous materials, 71
Home use, 37
Language acceptable to, 67
Mass of, 156, 294
Mechanism for isolating the SUPPLY MAINS, 133
MOBILE MEDICAL ELECTRIC EQUIPMENT, 242
Moving parts, 140, 143
RISK to, 332
Sensitivity to acoustic energy and vibration, 150
Sensitivity to vibration, 151
Spurious microwave radiation, 161
Spurious X-radiation, 160
Support, 156, 157, 159, 292
Unwanted or excessive radiation, 177
OVER-CURRENT RELEASE, 64, 117, 138, 179, 193, 194, 195, 235, 242, 248, 281, 284, 346
Definition, 34
OXYGEN RICH ENVIRONMENT, 57, 166, 168, 169, 170, 181, 226, 301, 302, 303, 319
Definition, 34
PATIENR LEAKAGE CURRENT, 235
PATIENT, 24, 28, 32, 33, 34, 35, 40, 44, 47, 62, 65, 145, 156, 159, 188, 196, 209, 210, 211, 213, 219, 220, 223, 225, 228, 232, 237, 263, 266, 268, 285, 287, 317, 321, 347
Acting as an OPERATOR, 244
Adult human, 156
APPLIED PART exceed 41°C, 163
APPLIED PARTS intended to supply heat to, 163
APPLIED PARTS not intended to supply heat to, 163
Cable, 62, 108, 193, 205, 206, 214, 215, 218, 241, 261, 272
Circuit, 214, 215
Condition, 271
Contact with, 47, 73, 77, 85, 110, 111, 143, 163, 203, 211, 213, 214, 216, 220, 226, 227, 234, 247, 249, 250, 251, 259, 262, 265, 266, 268, 272, 274, 278, 285, 299, 319, 331, 369
Current flowing in, 34, 226, 228, 229, 260, 273
Defibrillation of, 87, 241, 261, 262
Definition, 34
Disconnection from, 111, 273
Earthing of, 35, 86, 226, 259, 268, 278
Electric shock to, 32, 239
Expected position of, 71, 72, 150
Exposure to hazardous materials, 71
Exposure to toxic gases, 170
Heart, 28, 220, 246, 320
Home use, 37, 225
Incorrect delivery of energy or substances, 177, 306
Lead, 84, 87, 193, 206, 214, 215, 216, 218, 259
Mass of, 156, 294, 329, 330
Moving of, 139, 157
Moving parts, 139, 140, 145
Number of APPLIED PARTS, 268
PATIENT ENVIRONMENT, 34
PATIENT is an intended OPERATOR, 70
Release of, 145, 286
RISK to, 220, 270, 332
Sensitivity to acoustic energy, 289
Sensitivity to acoustic energy and vibration, 150

Copyright International Electrotechnical Commission
Provided by IHS Markit under license with IEC
No reproduction or networking permitted without license from IHS
Not for Resale, 08/26/2020 19:12:41 MDT

Sensitivity to vibration, 151, 289
Special needs, 143, 307
Support, 147, 155, 156, 157, 159, 214, 227, 238, 249, 284, 285, 292
Support of, 296
Transfer of energy, 77, 249
Unintended voltage on, 29, 35, 223, 258, 259, 260, 269, 273, 369
Unwanted or excessive radiation, 177, 297
PATIENT AUXILIARY CURRENT, 77, 94, 97, 108, 111, 214, 216, 226, 235, 268, 274, 326, 327, 342
Definition, 34
Limit, 40
Measurement, 98, 111, 227
Value, 94, 95, 269
Values, 249, 250, 266
PATIENT CONNECTION, 24, 29, 34, 35, 40, 77, 84, 87, 90, 97, 107, 110, 111, 114, 213, 214, 216, 217, 218, 226, 227, 237, 241, 247, 249, 250, 266, 269, 271, 272, 274
DEFIBRILLATION-PROOF APPLIED PART, 87, 89, 261
Definition, 34
Energy reduction test, 90
F-TYPE APPLIED PART, 86, 98, 258, 268, 278
Multiple, 111, 273
Single, 111, 273
TYPE B APPLIED PART, 110, 228, 258, 273
TYPE BF APPLIED PART, 228, 273
TYPE CF APPLIED PART, 229, 247, 268
WORKING VOLTAGE, 86
PATIENT ENVIRONMENT, 202, 203, 204, 206, 227, 319, 320, 321, 322, 323, 369
Definition, 34
PATIENT LEAKAGE CURRENT, 31, 97, 98, 107, 111, 214, 216, 226, 244, 266, 267
Definition, 35
Limit, 29, 40, 77, 84, 93, 268, 272, 273
ME SYSTEM, 205, 321
Measurement, 98, 110, 111, 272, 274
MULTIPLE SOCKET-OUTLET, 205
Total, 97, 98, 111, 205, 268, 269, 321
TYPE B APPLIED PART, 258
TYPE BF APPLIED PART, 269, 273
TYPE CF APPLIED PART, 229, 267
Value, 94, 95, 98, 268, 269
PEAK WORKING VOLTAGE, 112, 114, 115, 119, 120, 121, 124, 223, 227, 229
Definition, 35
Interpolation, 118
PEMS
See PROGRAMMABLE ELECTRICAL MEDICAL SYSTEM, 36
PEMS DEVELOPMENT LIFE-CYCLE, 185, 186, 310, 311, 314, 361, 364
Definition, 35
PEMS VALIDATION, 35, 314, 364
Definition, 35
Methods, 188
Plan, 185, 187, 188, 309
Results, 188
Team, 188
PERMANENTLY INSTALLED
Definition, 35
ME EQUIPMENT, 59, 60, 64, 75, 76, 90, 92, 95, 108, 133, 137, 138, 151, 246, 284
MEDICAL ELECTRICAL EQUIPMENT, 64
Non-, 95, 134, 204
PESS
See PROGRAMMABLE ELECTRONIC SUBSYSTEM, 36
Placed into service, 30, 33, 35, 39, 40
Pollution degree 1, 128
Pollution degree 2, 128
Pollution degree 3, 128
Pollution degree classification, 119
PORTABLE
Definition, 35
Equipment, 40
ME EQUIPMENT, 149, 190, 191, 198, 315
ME EQUIPMENT part, 191, 192
POTENTIAL EQUALIZATION CONDUCTOR, 68, 93, 94, 264, 329, 331
Definition, 35
POWER SUPPLY CORD, 31, 136, 283, 284, 302, 322
Clamping means, 91
CLASS II ME EQUIPMENT, 94
Colour of conductors, 68, 221
Conductors, 136
Cord anchorage, 135, 136
Cord connection, 132, 137, 349
Cord guard, 136
Cross-sectional area of conductors, 135, 138
Definition, 35
Incorporating switches, 134
Insulation of, 135
MAINS PLUG, 134
MULTIPLE SOCKET-OUTLET, 207, 225
Neutral conductor, 68
POTENTIAL EQUALIZATION CONDUCTOR, 94
PROTECTIVE EARTH CONDUCTOR, 91
Replaceable, 75, 138
Sheathing, 134, 135
Strain relief, 135
Testing with, 108, 128, 146
PRIMARY OPERATING FUNCTION, 143
Definition, 42
PROCEDURE, 37, 251, 266, 302, 309, 311, 313
Cleaning, 175, 203
Definition, 35
Document control, 185
Energy reduction test, 90
LEAKAGE CURRENT measurement, 98
Maintenance, 267
Measuring X-radiation, 297
Modification/change, 188
RISK CONTROL, 186
RISK MANAGEMENT, 230
Shutdown, 72
Start-up, 72, 213
Sterilization, 94, 113, 175
Test, 109, 160, 161, 174, 175, 261, 277, 382
Thermal cycling, 127
PROCESS, 24, 30, 45
Assessment of APPLIED PARTS, 213
Cleaning, 331
Cleaning or disinfection, 175
Definition, 36
Design, 230

Copyright International Electrotechnical Commission
Provided by IHS Markit under license with IEC
No reproduction or networking permitted without license from IHS
Not for Resale, 08/26/2020 19:12:41 MDT

Handling of PATIENT, 157
Manufacturing, 93, 154, 236, 306
Multiple cleanings/disinfections, 175
PEMS DEVELOPMENT LIFE-CYCLE, 185, 308, 309, 310, 311, 312, 361, 364
PEMS VALIDATION, 35
Procedure, 35
RISK ASSESSMENT, 37
RISK CONTROL, 37
RISK EVALUATION, 37
RISK MANAGEMENT, 40, 44, 46, 47, 48, 49, 76, 80, 85, 151, 160, 161, 163, 169, 173, 174, 175, 176, 177, 180, 185, 186, 189, 196, 198, 210, 213, 215, 222, 230, 231, 233, 234, 235, 237, 242, 287, 289, 301, 304, 308, 309, 315, 316, 325
Software development, 185
Thermoforming, 316
USABILITY ENGINEERING, 70, 176, 189, 230, 243, 305
USABILITY ENGINEERING, 42
VERIFICATION, 311
PROGRAMMABLE ELECTRICAL MEDICAL SYSTEM (PEMS), 35, 36, 59, 184, 185, 186, 187, 188, 211, 308, 314, 390
PROGRAMMABLE ELECTRONIC SUBSYSTEM (PESS), 36, 184, 186, 187, 390
Definition, 36
PROPERLY INSTALLED, 62, 139
Definition, 36
PROTECTIVE EARTH CONDUCTOR, 28, 31, 35, 36, 40, 68, 76, 90, 91, 93, 107, 109, 136, 137, 138, 205, 207, 225, 235, 244, 265, 266, 283, 321, 322, 369
Definition, 36
ME SYSTEM, 208
Non-PERMANENTLY INSTALLED, 204
PROTECTIVE EARTH CONNECTION, 32, 76, 82, 83, 91, 92, 93, 94, 207, 223, 225, 242, 248, 259, 261, 263, 264, 272, 274, 276, 282, 284, 304, 322, 373
Colour of, 68
Definition, 36
ME SYSTEM, 208
PROTECTIVE EARTH TERMINAL, 36, 64, 91, 92, 107, 137, 207, 242, 251, 263
Definition, 36
PROTECTIVELY EARTHED, 27, 40, 84, 87, 90, 92, 93, 107, 109, 120, 228, 250, 251, 259, 263, 321, 322
Definition, 36
Non-, 95, 98, 109, 110, 135, 228, 247, 261
RATED
Altitude, 118
CATEGORY AP, 303
CATEGORY APG, 303
Characteristics, 133
Components, 207
Current, 75, 92, 135, 200
Definition, 36
DUTY CYCLE, 183
Fire protection device, 195
Flow rate, 63
Frequency, 52, 94, 198, 200, 277, 318
Input, 51
Input power, 50, 61
IP Classification, 238
Load, 153
MAINS VOLTAGE, 119, 124, 160, 260
Marked, 61
Non-CONTINUOUS OPERATION, 182, 183, 184
On and off periods, 164, 205
Operating time, 183
Operation, 220, 239, 308
Output current or power, 61
Output power, 207
Output voltage, 61
Phase to neutral supply voltage, 85
Pressure, 63
Protection against particulate matter, 304
Supply frequency, 60
Supply frequency range, 60
SUPPLY MAINS, 52
SUPPLY MAINS voltage, 80
Supply voltage, 60, 85, 182, 183, 205, 260, 271, 272
Supply voltage range, 60
Temperature, 135
Voltage, 50, 51, 52, 73, 79, 80, 86, 164, 181, 183, 184, 198, 200, 258
Voltage (maximum), 164
Voltage (minimum), 164
Voltage range, 61, 86, 184
SUPPLY MAINS, 61
Reasonably foreseeable misuse, 27, 44, 49, 139, 140, 143, 165, 187, 209, 230, 239, 289, 308, 315, 316
RECORD, 38, 45, 185, 231, 315
Definition, 36
Examination of, 44
USABILITY ENGINEERING FILE, 42
REINFORCED INSULATION, 27, 48, 111, 112, 116, 148, 189, 220, 228, 247, 250, 251, 253, 274, 276, 278, 284, 322, 381, 382, 383
Definition, 37
Removable protective means, 63
RESIDUAL RISK, 44, 232, 233
Acceptability criteria, 45, 46
Acceptability of, 251, 263, 285, 320
Alternative measure or test method, 234
Definition, 37
Equivalent safety, 234
ESSENTIAL PERFORMANCE, 232
Evaluation, 45
Identifiable safety requirements, 312
Indication of, 146, 285
Moving parts, 139
of fire, 169
SERVICE PERSONNEL, 225
System integrator, 365
Unacceptable, 232
RESPONSIBLE ORGANIZATION, 23, 32, 38, 69, 70, 71, 73, 75, 78, 79, 188, 202, 203, 205, 233, 238, 241, 243, 244, 265, 297, 299, 303, 320, 321, 323, 348, 365, 366, 367
Definition, 37
EXPECTED SERVICE LIFE, 234
Home use, 37
Instructions for use, 70
Mechanism for isolating the SUPPLY MAINS, 133
Periodic inspection and maintenance, 316

Copyright International Electrotechnical Commission
Provided by IHS Markit under license with IEC
No reproduction or networking permitted without license from IHS
Not for Resale, 08/26/2020 19:12:41 MDT

HAZARDOUS SITUATION, 188
RISK, 46, 47, 231, 232
Acceptability criteria, 45
Acceptability of, 232
Acceptable, 32, 37, 45, 46, 48, 144, 145, 186, 222, 231, 232, 289, 309, 315
Acceptance criteria, 37
Accidental disconnection, 93
Accidental selection of excessive output values, 176
Accuracy of controls and instruments, 176
Alpha, beta, gamma and neutron radiation, 160
Arrangement of controls and indicators, 189
Burn, 250, 265, 271
Compatibility with substances, 175
COMPONENT WITH HIGH-INTEGRITY CHARACTERISTICS, 312
Consequent, 311
Definition, 37
Diagnostic or therapeutic acoustic pressure, 177
Diagnostic or therapeutic radiation, 177
Disconnection, 283
Earthing the PATIENT, 258
Electric shock, 32
Electric shock to others than the PATIENT, 32
Electric shock to PATIENT, 32
ESSENTIAL PERFORMANCE, 232
Evaluation, 45
Expelled parts, 150
Explanation, 203
Failure of component, 48
Fault, 284
Fire, 306
Flammable agent, 303
HIGH VOLTAGE, 242
Identification of ESSENTIAL PERFORMANCE, 46
Identified, 186
Ignition, 170
Incorrect delivery of energy or substances, 177
Incorrect output, 176
Infra- and ultrasound, 151
Infrared radiation, 161
Initial movement, 148, 149
Insulation breakdown, 237, 251
Intentional exceeding of safety limits, 176
Mechanical rupture, 291
Mix-up, 315, 316
Moulding and mechanical stress, 189
Moving part, 285
Moving parts, 139
Multiple PATIENT CONNECTIONS, 271, 273, 274
New, 188
of accumulation and ignition, 195
of contact, 259
of explosion, 346
of fire, 166, 283
Overbalancing, 147, 329
Overtravel, 143
PATIENT ENVIRONMENT, 320
PATIENT support, 155
PEMS, 309
PEMS problem resolution, 186
Poor USABILITY, 176
Pre-set controls, 196
Previously unidentified, 188
Radiotherapy, 177
Reciprocal interference, 71
Reduction, 38, 48, 291, 311
Replacement of lithium batteries or fuel cells, 64
Safety sign, 67
Servicing, 226
Sharp edge, 287
SINGLE FAULT CONDITION, 237
Slow, unwanted movement, 289
Spillage, 304
to PATIENT, 213, 221, 234, 260, 268, 270
to PATIENT or OPERATOR, 332
TYPE B APPLIED PART, 84
Ultraviolet radiation, 161
Unacceptable, 27, 28, 38, 45, 48, 49, 63, 65, 71, 75, 76, 85, 116, 132, 140, 142, 143, 145, 147, 148, 150, 151, 152, 153, 154, 155, 156, 157, 158, 163, 166, 173, 174, 175, 180, 184, 189, 190, 191, 192, 193, 194, 195, 197, 202, 206, 220, 221, 232, 235, 240, 286, 287, 288, 294, 306, 315, 320
USABILITY ENGINEERING, 305
Ventricular fibrillation, 266, 267
Vibration, 290
Visible electromagnetic radiation, 161
RISK ANALYSIS, 232
COMPONENTS WITH HIGH-INTEGRITY CHARACTERISTICS, 236
Definition, 37
Identification of ESSENTIAL PERFORMANCE, 46
Identification of failures, 305
Interruption of any one power-carrying conductor, 76
PEMS DEVELOPMENT LIFE-CYCLE, 308
Results of, 48
Revision of, 52
RISK ASSESSMENT, 37
Second fault, 235
Shorting of gaps, 306
SINGLE FAULT CONDITION, 269
Support system, 154
TOUCH CURRENT, 267
RISK ASSESSMENT, 294
Definition, 37
HAND-HELD APPLIED PARTS, 315
PEMS DEVELOPMENT LIFE-CYCLE, 308, 310, 312
Source of ignition, 170
RISK ASSESSMENT, 46
RISK CONTROL, 44, 232
Alternative measure or test method, 47
Alternative measures, 47
Compatibility with substances, 175
Definition, 37
Measure, 45, 139, 142, 185, 186, 187, 231, 232, 233, 234, 237, 289, 309, 311, 312, 314
Measures, 46
Option analysis, 233
PEMS DEVELOPMENT LIFE-CYCLE, 186, 308
RESIDUAL RISK, 37
RISK EVALUATION, 231
Definition, 37

Copyright International Electrotechnical Commission
Provided by IHS Markit under license with IEC
No reproduction or networking permitted without license from IHS
Not for Resale, 08/26/2020 19:12:41 MDT

RISK ASSESSMENT, 37
RISK MANAGEMENT, 47, 184
Activities, 185
Application of, 210, 214, 216, 217, 218, 230, 269, 319
Contents of, 38
Definition, 37
Methods, 202, 320
PEMS DEVELOPMENT LIFE-CYCLE, 185, 309
Plan, 45, 46, 185, 232, 309
PROCESS, 24, 38, 40, 44, 46, 47, 48, 49, 76, 80, 85, 151, 160, 161, 163, 169, 173, 174, 175, 176, 177, 180, 185, 186, 189, 196, 198, 210, 213, 215, 222, 230, 231, 233, 234, 235, 237, 242, 287, 289, 301, 304, 308, 309, 316, 325
RECORD, 45
RECORDS required by this standard, 46
Report, 314
Results of, 310
SINGLE FAULT CONDITION, 48
Support systems, 293
System integration, 365
Temperature limits, 299
RISK MANAGEMENT FILE, 45, 46, 51, 231
Alternative means of compliance, 171
Alternative methods of temperature measurement, 165
Cleaning/disinfection, 175
Contents of, 187, 231, 281, 282, 304, 309, 315
Definition, 38
Equivalent safety, 234
Examination of, 46
EXPECTED SERVICE LIFE, 47
Fuses and OVER-CURRENT RELEASES, 138
Inspection, 47, 49, 57, 78, 84, 92, 116, 132, 133, 138, 142, 143, 145, 150, 151, 152, 153, 154, 155, 156, 157, 159, 160, 161, 164, 170, 173, 174, 175, 176, 177, 180, 189, 190, 191, 192, 193, 194, 195, 196, 198, 206, 231, 232
Omission of OVER-CURRENT RELEASES, 195
Probability and duration of contact, 164
Professional relationships of PEMS VALIDATION TEAM members, 188
Spillage, 174
Temperature limits, 162, 163
Temperature test corner, 163
Worst case limits of oxygen concentration of flammable fuels, 166
RISK MANAGEMENT FILE, 143
RISK MANAGEMENT FILE, 158
SAFE WORKING LOAD, 39, 63, 143, 147, 148, 149, 156, 157, 158, 159, 191, 192, 330
Definition, 38
MOBILE MEDICAL ELECTRIC EQUIPMENT, 242
Safety notice
Overflow, 174
Safety sign, 58, 62, 63, 67, 70, 146, 147, 159, 206, 242, 329, 332, 334, 338, 339
SECONDARY CIRCUIT, 114, 120, 125, 228, 247, 271, 276, 277, 278
Definition, 38
SELF-RESETTING THERMAL CUT-OUT, 194
Definition, 38
Non-, 182, 194, 359
SEPARATION DEVICE, 204, 228, 320, 321, 372, 373
Definition, 38
Serial number
ACCESSORY, 60
ME EQUIPMENT, 59
SERVICE PERSONNEL, 39, 52, 59, 63, 70, 73, 75, 77, 93, 137, 159, 225, 238, 242, 246, 282, 283, 284, 317
Definition, 38
Mechanism for isolating the SUPPLY MAINS, 133
Qualification of, 75
Rough surfaces, corners and edges, 287
Spurious microwave radiation, 161
Spurious X-radiation, 160
Servicing, 189, 226, 283, 285, 366
SEVERITY, 37, 222, 232, 235, 261, 289
Definition, 38
SIGNAL INPUT/OUTPUT PART, 72, 75, 87, 97, 103, 107, 110, 114, 228, 262, 272, 321, 372, 379, 391
Definition, 38
SINGLE FAULT CONDITION, 27, 32, 34, 38, 45, 48, 75, 76, 78, 79, 83, 84, 93, 94, 95, 97, 98, 99, 100, 101, 103, 105, 107, 109, 132, 142, 143, 163, 166, 169, 170, 174, 175, 177, 178, 179, 180, 181, 198, 209, 225, 231, 235, 237, 246, 247, 248, 250, 261, 265, 266, 267, 268, 269, 272, 273, 282, 291, 292, 296, 301, 302, 303, 304, 306, 307, 322, 323, 347, 355, 356, 378
Definition, 38
Identification of ESSENTIAL PERFORMANCE, 46
Undetected, 238
SINGLE FAULT SAFE, 48, 142, 180, 235, 302, 317
Definition, 38
SIP/SOP
See SIGNAL INPUT/OUTPUT PART, 38
Software, 185, 188, 244, 308, 364
Maintenance, 308
STATIONARY
Definition, 39
Equipment, 285
ME EQUIPMENT, 58, 136, 171, 190
SUPPLEMENTARY INSULATION, 28, 112, 116, 148, 189, 220, 223, 251, 276, 381, 382, 383
Definition, 39
SUPPLY MAINS, 31, 32, 33, 35, 47, 50, 57, 60, 61, 72, 75, 76, 80, 90, 93, 107, 108, 117, 120, 139, 146, 201, 204, 205, 223, 224, 225, 228, 233, 239, 244, 259, 260, 261, 271, 276, 277, 343
a.c., 52, 120, 260
Apparent impedance of, 74, 246
Characteristics of, 50, 51, 266
d.c., 53, 77, 260
Definition, 39
Interruption of, 175, 304, 326
Isolation from, 74, 133, 134, 244, 246, 282
Overvoltage category, 119, 120, 278
Polyphase, 85, 133, 184, 344
RATED values, 52
Single-phase, 85
Socket-outlet, 29
Switch, 134

Copyright International Electrotechnical Commission
Provided by IHS Markit under license with IEC
No reproduction or networking permitted without license from IHS
Not for Resale, 08/26/2020 19:12:41 MDT

Symbol, 40, 59, 60, 61, 62, 63, 64, 65, 67, 68, 70, 72, 80, 93, 134, 144, 242, 271, 329, 332, 348
Technical description, 51, 52, 54, 64, 69, 70, 72, 74, 80, 133, 225, 331
Ambient temperature, 116
Inspection, 80, 198
Installation instructions, 164
Operating temperature, 161, 165
Transient current, 204
Unique version identifier, 75
TENSILE SAFETY FACTOR, 48, 154, 155, 157, 158, 159, 291, 292, 293, 294, 296
Definition, 39
TENSILE STRENGTH, 39, 155
Definition, 39
TERMINAL DEVICE
Definition, 39
HIGH-VOLTAGE, 62, 242
MAINS TERMINAL DEVICE, 31
THERMAL CUT-OUT, 64, 161, 165, 179, 181, 183, 193, 194, 242
Definition, 39
Manual reset, 194
SELF-RESETTING THERMAL CUT-OUT, 38
THERMAL STABILITY, 164, 181, 182, 183, 184, 199, 200, 205
Definition, 39
THERMOSTAT, 182, 195, 330
Definition, 39
Failure of, 180, 194
TOOL, 23, 29, 35, 39, 53, 54, 57, 58, 62, 63, 64, 76, 77, 78, 79, 80, 91, 93, 132, 137, 140, 142, 153, 158, 160, 161, 165, 193, 196, 204, 206, 207, 208, 238, 250, 285, 315, 316, 323, 349, 350, 373
Definition, 39
TOTAL LOAD, 39, 154, 155, 158, 293
Definition, 39
TOUCH CURRENT, 31, 97, 235, 244, 249, 266, 267, 268, 322, 371, 373
Definition, 40
Limit, 77, 93, 204, 228, 248, 321, 369
ME SYSTEM, 95
Measurement, 98, 100, 109, 272
MULTIPLE SOCKET-OUTLET, 205, 321
SINGLE FAULT CONDITION, 225, 323
Value, 94, 95, 322
Transport and storage
Conditions, 62, 74, 193, 203, 245
Covers used during, 53
Data for, 74
Protective packaging, 62
TRANSPORTABLE
Definition, 40
Equipment, 33, 35, 42
ME EQUIPMENT, 58, 171, 174, 304
TRAPPING ZONE, 140, 142, 286
Definition, 40
TYPE B APPLIED PART, 40, 84, 110, 111, 228, 249, 259, 273, 379
Classification, 40, 47, 57, 77, 249, 265
DEFIBRILLATION-PROOF symbol, 337
Definition, 40
Marking of, 40, 61
Measurement, 106
PATIENT LEAKAGE CURRENT, 268
Symbol, 336
Total PATIENT LEAKAGE CURRENT, 268
TYPE BF APPLIED PART, 40, 110, 111, 228, 235, 249, 259, 268, 273, 274, 380
Classification, 29, 40, 47, 57, 77, 84, 249, 265
DEFIBRILLATION-PROOF symbol, 337
Definition, 40
Marking of, 40, 61
MEASUREMENT, 106
PATIENT LEAKAGE CURRENT, 268
Symbol, 336
Total PATIENT LEAKAGE CURRENT, 269
TYPE CF APPLIED PART, 77, 98, 111, 229, 235, 247, 249, 259, 266, 267, 273, 274
Classification, 29, 47, 57, 77, 84, 249, 265
DEFIBRILLATION-PROOF symbol, 337
Definition, 40
Marking of, 40, 61
MEASUREMENT, 106
PATIENT LEAKAGE CURRENT, 268
Symbol, 336
Total PATIENT LEAKAGE CURRENT, 268, 269
TYPE TEST, 51, 112, 237, 381
COMPONENTS WITH HIGH-INTEGRITY CHARACTERISTICS, 236
Definition, 41
Samples, 52, 238
Uninterruptible power supply (UPS), 204
USABILITY, 176, 210, 239, 244, 305, 325
Definition, 41
USABILITY ENGINEERING, 70, 176, 230, 305
Definition, 41
PROCESS, 42, 189, 243
USABILITY ENGINEERING FILE
Definition, 42
Use by date
ACCESSORY, 60
ME EQUIPMENT, 59
VERIFICATION
Coverage criteria, 187, 309, 310, 311, 312
Definition, 41
fuse or OVER-CURRENT RELEASE, 138
Methods, 185
Milestones, 187
of Markings, 328
PEMS, 187, 361
Plan, 187, 314
Polymer properties, 316
Results, 187, 310
RISK CONTROL measures, 314
Strategies, 187, 364
Tools, 187, 313, 315
Warning, 58, 62, 64, 67, 71, 72, 74, 75, 134, 139, 146, 147, 151, 203, 241, 244, 283, 285, 287, 320, 321, 329, 331, 332, 338, 366
Overflow, 174
WORKING VOLTAGE, 35, 83, 84, 85, 86, 112, 113, 122, 123, 125, 126, 200, 201, 204, 223, 228, 229, 235, 236, 248, 253, 261, 276, 277, 279, 377
Definition, 41
Interpolation, 118, 281
Y1 Capacitor, 82, 83

Copyright International Electrotechnical Commission
Provided by IHS Markit under license with IEC
No reproduction or networking permitted without license from IHS
Not for Resale, 08/26/2020 19:12:41 MDT

Y2 Capacitor, 82, 83

Copyright International Electrotechnical Commission
Provided by IHS Markit under license with IEC
No reproduction or networking permitted without license from IHS
Not for Resale, 08/26/2020 19:12:41 MDT

Copyright International Electrotechnical Commission
Provided by IHS Markit under license with IEC
No reproduction or networking permitted without license from IHS
Not for Resale, 08/26/2020 19:12:41 MDT

Copyright International Electrotechnical Commission
Provided by IHS Markit under license with IEC
No reproduction or networking permitted without license from IHS
Not for Resale, 08/26/2020 19:12:41 MDT

INTERNATIONAL
ELECTROTECHNICAL
COMMISSION

3, rue de Varembé
PO Box 131
CH-1211 Geneva 20
Switzerland

Tel: + 41 22 919 02 11
info@iec.ch
www.iec.ch

医课汇
公众号
专业医疗器械资讯平台
WECHAT OF
HLONGMED

hlongmed.com
医疗器械咨询服务
MEDICAL DEVICE
CONSULTING
SERVICES

医课培训平台
医疗器械任职培训
WEB TRAINING
CENTER

医械宝
医疗器械知识平台
KNOWLEDG
ECENTEROF
MEDICAL DEVICE

MDCPP.COM
医械云专业平台
KNOWLEDG
ECENTEROF MEDICAL
DEVICE

Copyright International Electrotechnical Commission
Provided by IHS Markit under license with IEC
No reproduction or networking permitted without license from I